Radulock™ Direct Tubing Connection Ports for Microbore Tubing

Luke Parkinson
(Formerly) Microfluidics Engineer, Ian Wark Research Institute / Australian National Fabrication Facility – South Australian Node (ANFF-SA)
University of South Australia, Mawson Lakes, South Australia.
Luke@radulock.com

Note: This work contained in this presentation was conducted at University of South Australia and ANFF-SA, the South Australian Node of the Australian National Fabrication Facility Pty Ltd

There is a need for microfluidic chip-to-world tubing connections with the following attributes:

1. No extra parts
2. Injection mouldable with very simple (non-cored) tooling
3. High pressure tolerance
4. Very small footprint (tubing diameter only)
5. Easy to use
6. Resistant to inadvertent manual extraction
7. No flanging, swaging or other tubing preparation necessary

The following describes port/via geometries for connecting common flexible tubing to satisfy these industry needs.

Current Complete Counterbore and Corona Design

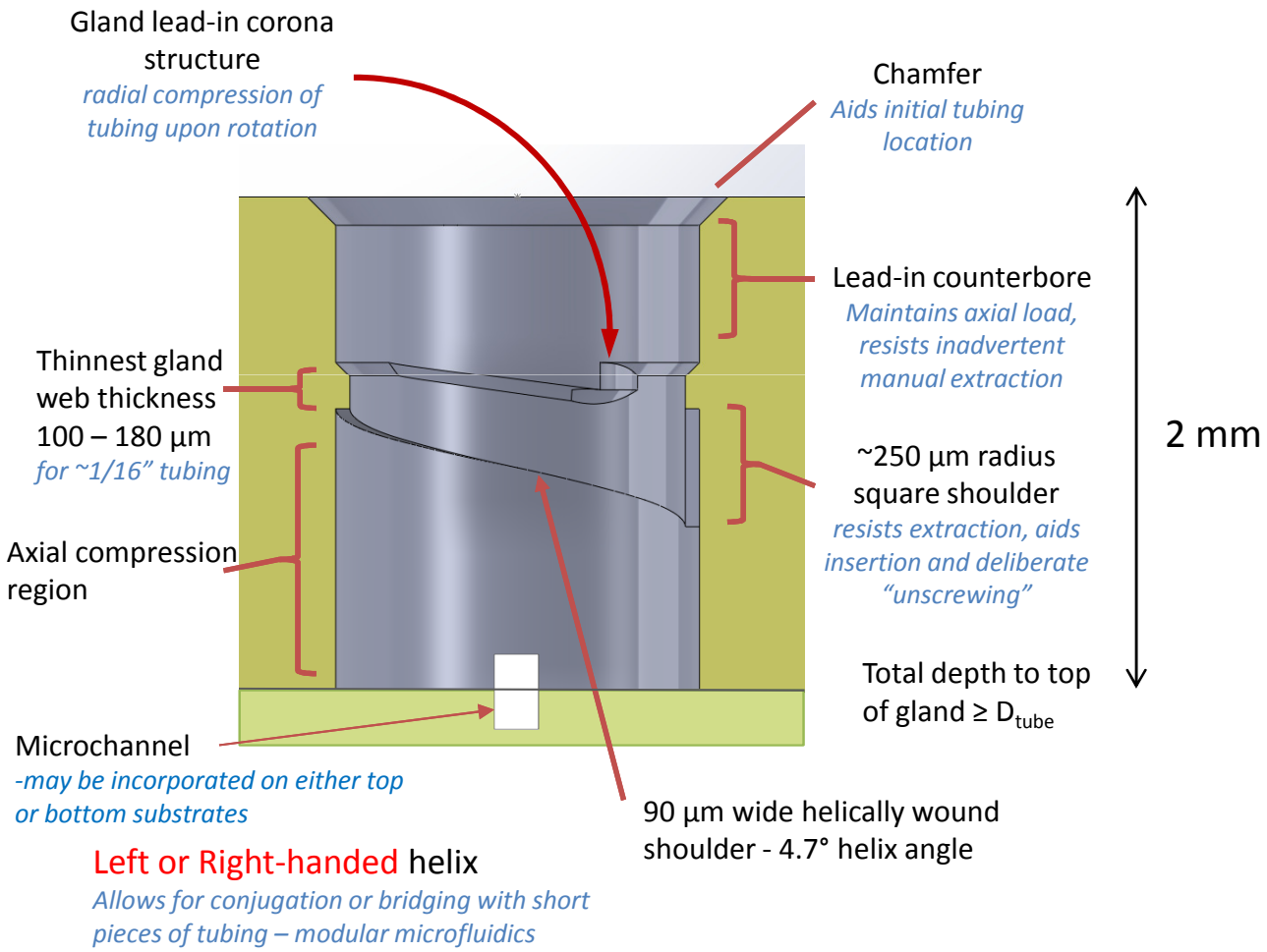

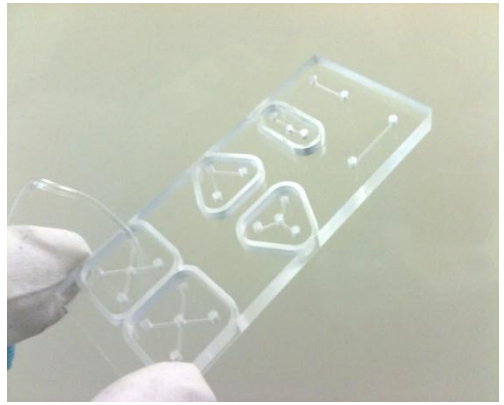

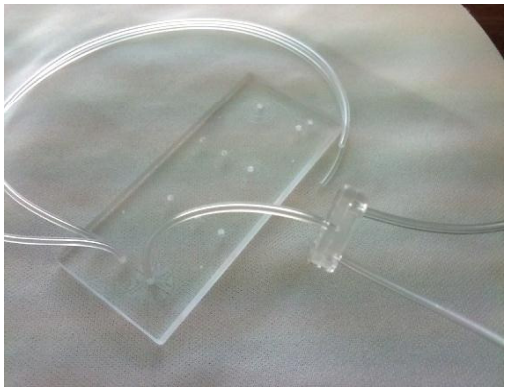

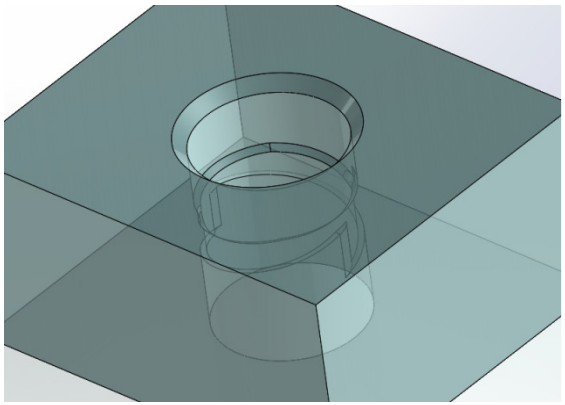

This depicts the most developed geometry in cross-section

Attachment procedure

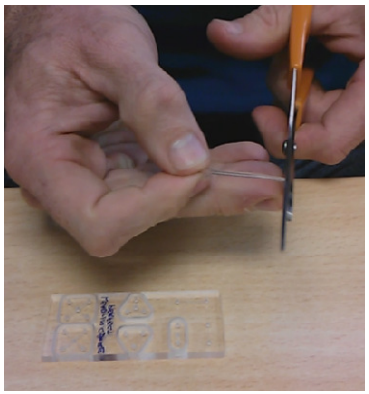

Careless cutting of tube



Alignment with Radulock™ port



Screw-in

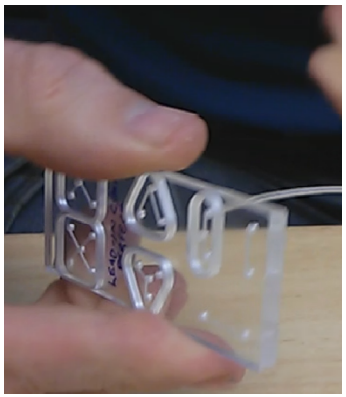

FINISHED!



Difficult to pull-out (without unscrewing)

>100 bar seal!

0 seconds

4

6

9 seconds

Performance

- At pressures between **80 and 180 bar,** failure of some other part of the hydraulic circuit has prevented measurement of the maximum port pressure (delamination, syringe extrusion etc.)
  - *-this is beyond the working pressure of the tubing and well in excess of common requirements*
  - *-measurements made for Tygon® 0.060" OD and EVA 1/16" tubing*

- Face-sealing achievable with tubing cut angle up to about 25° (Tygon ®) but not with EVA
  - *-no observable difference in max pressure but harder to manually extract with face-seal*
  - *-allows for reckless cutting of the tubing with scissors*

- The seal becomes visibly stronger as the tubing swells into the port at higher pressure

- Pressure tolerance maintained after 4 weeks (even with noticeable compression set)

- Effective sealing in port depth (substrate thickness) as small as 1.5 mm *(ie. 1 x tubing diameter)*

Key needs we have met

✔ 1. *DIRECT* fitment with no extra parts
- and no extra material or extra bulk

✔ 2. Injection mouldable with very simple (non-cored) tooling
- *and accommodated into existing cavity mould – virtually no expense*
- *any toolroom capable of producing a µfluidic cavity mould can incorporate this geometry*

✔ 3. High pressure tolerance (>>100 bar!)
- *well in excess of tubing working pressure and common needs*

✔ 4. Very small footprint (tubing diameter only)
- *with no design restriction on location of ports*

✔ 5. Easy to use
- *even with wet, gloved hands and limited attention*

✔ 6. Resistant to inadvertent manual extraction

✔ 7. No flanging, swaging or other tubing preparation necessary

8. *ZERO DEAD VOLUME (if desired)*

9. *Suited to many non-microfluidic applications*

10. *Protected by PCT/International patents and now seeking licence and development partners!*

How does it work?

Function – *shown in simplest configuration*

Cross-section view

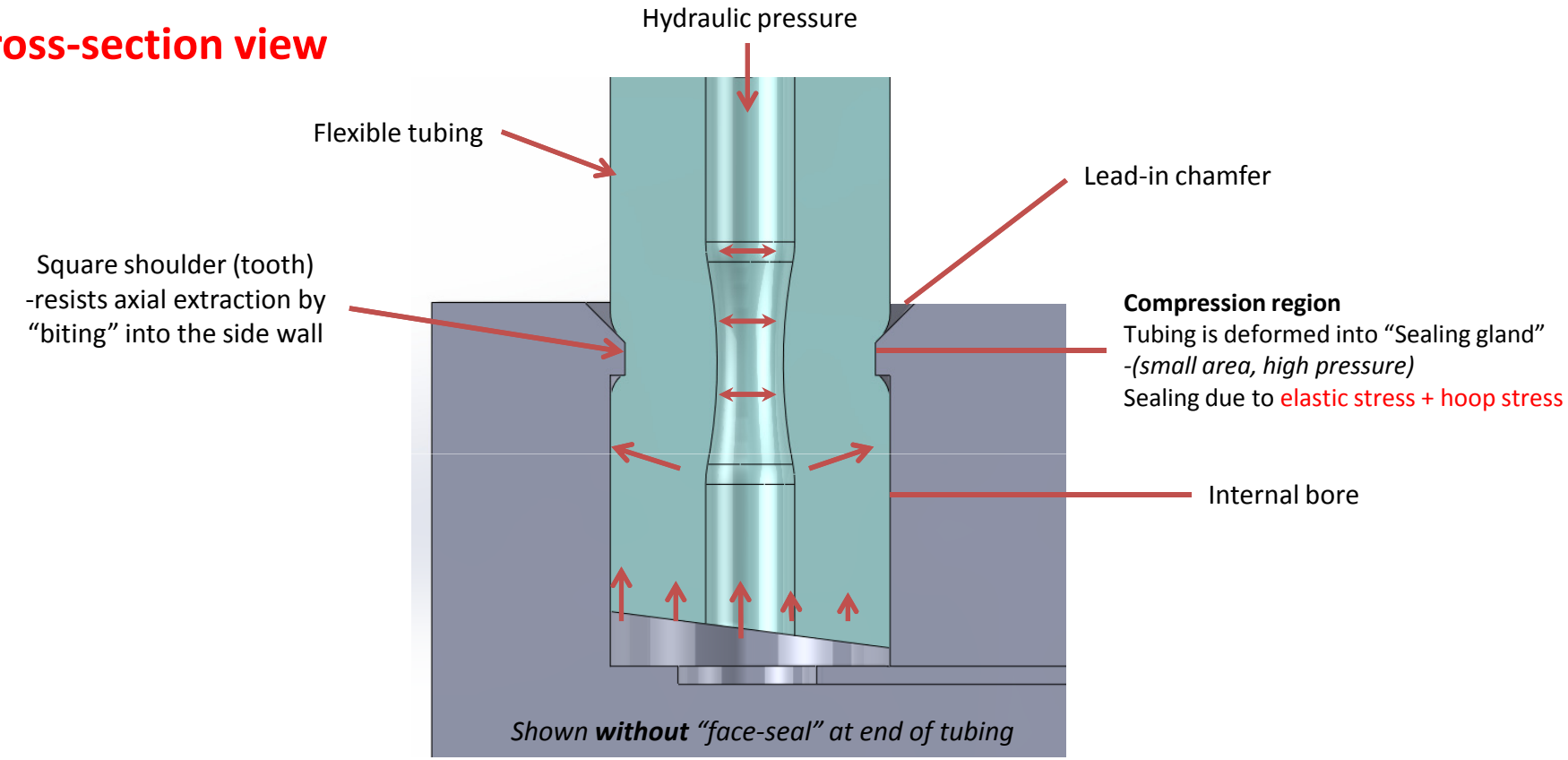

- The hydraulic pressure in the tubing causes a hoop stress in that is borne by its walls,
  -in this case the compression and deformation of the tubing causes the pressure between the tubing and the walls in the gland region to be greater than elsewhere and in excess of the fluid pressure.
- Hydraulic pressure on the end face of the tubing may cause deformation in the main bore, augmenting the seal.
- The sealing function may be likened to that of an o-ring, where sealing pressure increases with hydraulic pressure.

Function – *helically wound shoulder*

- **Round tubing has high torsional strength, but difficult to control axial load**
  - it's floppy and fiddly

- **Simple thread will not seal**
  – leakage through root of thread

- **A helically wound shoulder translates torsion to axial load. This performs 2 functions:**

1. *Aids insertion by drawing the tubing into the port upon rotation*
2. *Compresses the end of the tubing axially to form a seal at the end face of the tubing (even with a tubing cut angle of ~25°)*

NB. A hand or machine finished, longer, 60° included angle lead-in makes operation very easy, but not as easy as the full corona and counterbore geometry

Cross-section of simple port

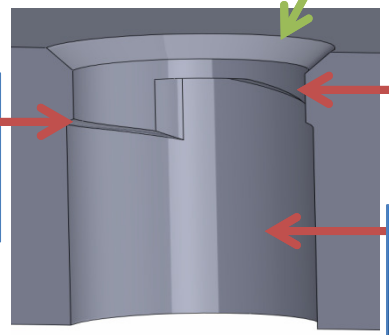

Helically wound shoulder *(shown as 2-start half turn thread – may be single or multi-start)*

Sealing gland (radial compression region)

Axial compression region *-tubing is compressed along its axis upon rotation*

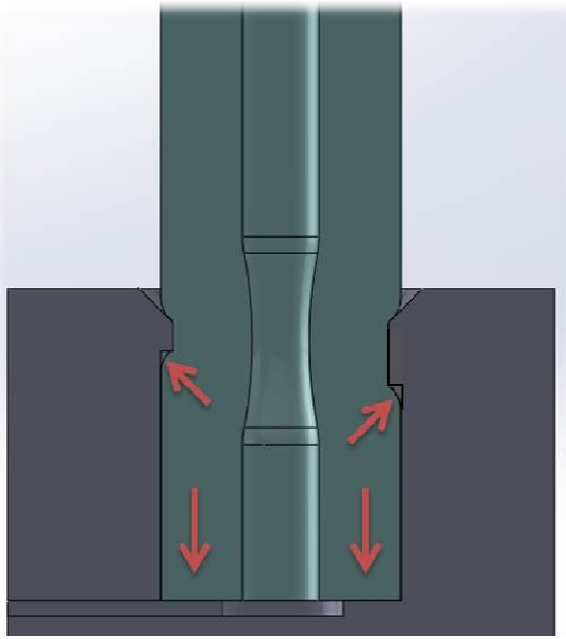

Face-seal is formed by axial compression
-zero dead volume

NOTE: This simple design displays excellent sealing function but is more difficult to operate than complete geometry – suitable for shallow ports down to 1 x tubing diameter and rapid prototyping

Parallel Developments

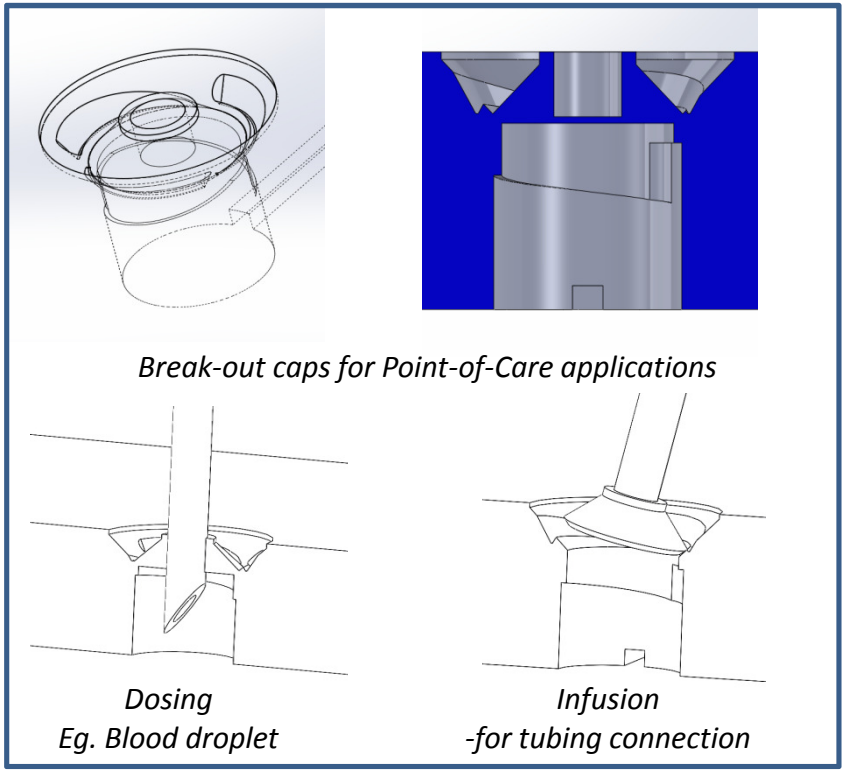

Break-out caps for Point-of-Care applications

Dosing
Eg. Blood droplet

Infusion
-for tubing connection

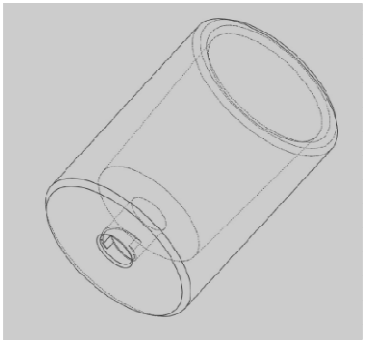

Adaption to other peripherals

Connectors, mixers, flow splitters etc.

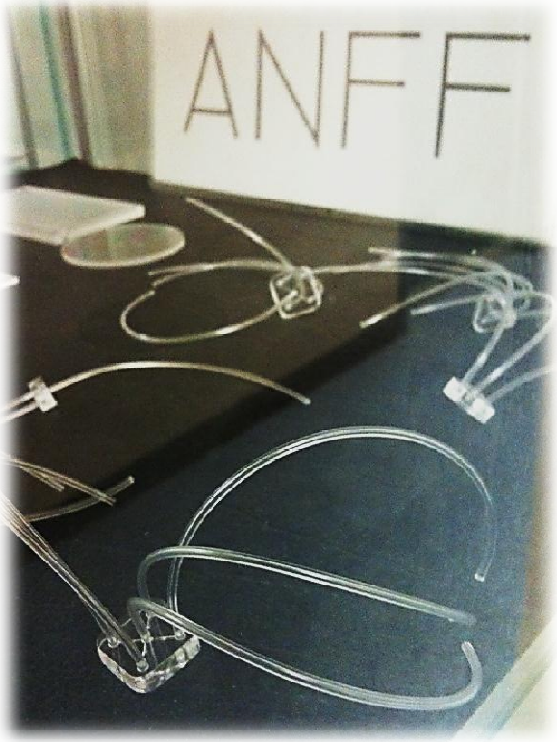

Acknowledgements

This work was generously supported in part by an ITEK Catalyst Investment Fund (ITEK Ventures Pty Ltd with thanks to Mark Bruce and Peter Harriss) and all work was conducted within and supported by The Australian National Fabrication Facility under The National Collaborative Research Infrastructure Strategy.



SEM micrograph of a squid ***Radula*** – the buccal/throat structure of molluscs used for trapping food

-microstructured inwards-pointing teeth allow matter to glide in easily but prevent its escape

darwinsgalapagos.com