Normally Closed Microvalve *Classic*

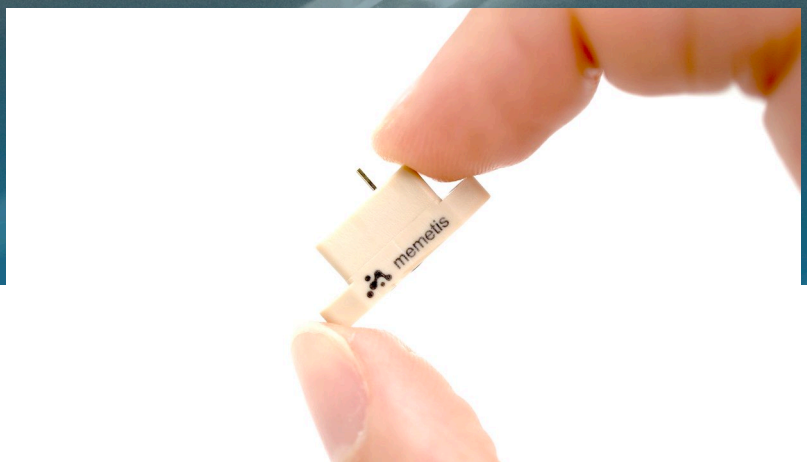

The 2/2-way normally closed microvalve is a ultra-compact, lightweight device designed with cutting-edge actuation technology using a shape memory alloy. Its media-separated design makes it compatible with both liquids and gases, making it highly versatile across a range of application areas such as life sciences, microfluidics, diagnostics, and aerospace.

Notably, the microvalve delivers an exceptional fluidic performance for its size while maintaining minimal power consumption, setting a new benchmark in efficiency and effectiveness in the realm of microvalve technology.

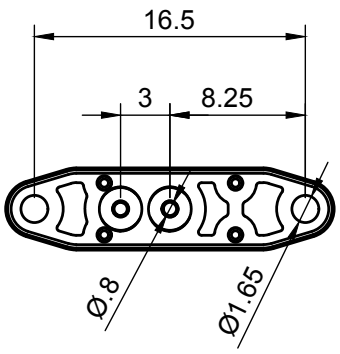

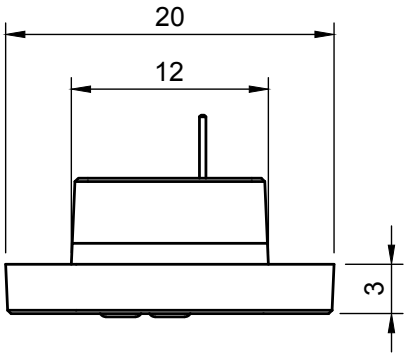

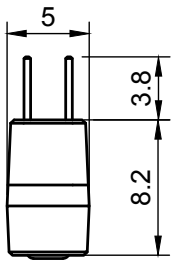

Dimensions in millimeters
CAD model available on request

Contact Information

memetis GmbH
Gablonzer Str. 27
76185 Karlsruhe, Germany
Tel. +49 721 547000240
Email: support@memetis.com

General Information

Model ID	MVL-22-NC-08-14P-PEEK-SIL
Type	2/2-way, media separated
Functionality	Normally closed valve: on/off, proportional control possible
Media types	Liquids, gases
Dimensions (WxLxH)	20 mm x 5 mm x 8 mm
Nominal orifice DN	0.8 mm
Weight	0.8 g
Internal volume	< 6.5 µl
Fluidic connection	Flange mount (2x M1.6 screws), silicone o-rings included
Leakage rate	< 1 x 10^{-3} (mbar x l)/s
Cycle lifetime	30 x 10^{6} cycles

Performance Data

Min. relative input pressure	0.0 bar
Max. relative pressure (inlet)	3.0 bar
Max. relative pressure (outlet)	2.0 bar
Operating temperature	10 °C to 55 °C ambient temperature
Storage temperature	-20 °C to 90 °C
Switching time (on)	< 0.05 s (at Δp = 1 bar and 20 °C ambient temperature)
Switching time (off)	< 0.16 s (at Δp = 1 bar and 20 °C ambient temperature)
Flow rate (air)	3000 ml/min (at 1 bar pressure difference)
Flow rate (water)	90 ml/min (at 1 bar pressure difference)
K_v value	0.005 m^3/h
Autoclavabilty	Yes (tested at 134 °C and 2 bars)

Wetted Materials

Housing	PEEK
Sealing membrane	Silicone (contact us for different materials)
O-rings	Silicone (contact us for different materials)

Electrical Specifications

Electronic control	Constant current controlled
Electrical connection	Pin header, pitch 2.54 mm (contact us for different connection)
Electrical power consumption	< 0.25 W
Actuator resistance	1.05 Ω ± 20 %

Continuous current control	
Continuous electrical current	500 mA (at 20 °C ambient temperature)
Electrical power consumption	0.25 W (at 20 °C ambient temperature)
Continuous electrical current	350 mA (at 50 °C ambient temperature)
Electrical power consumption	0.125 W (at 50 °C ambient temperature)

Electrical current profile control	
Peak and hold electrical currents	750 mA for 50 ms, 375 mA continuous (at 20 °C ambient temp.)
Electrical power consumption	< 0.6 W for 50 ms, < 0.15 W continuous (at 20 °C ambient temp.)

⚠ **Please note:**

- The valves are current-controlled. For easy integration and evaluation we offer electronic control units.
- An electrical overcurrent may reduce cycle life-time.
- We recommend validating the current profiles within your specific application and ambient conditions.
- Do not attempt to operate the valve at constant voltage!

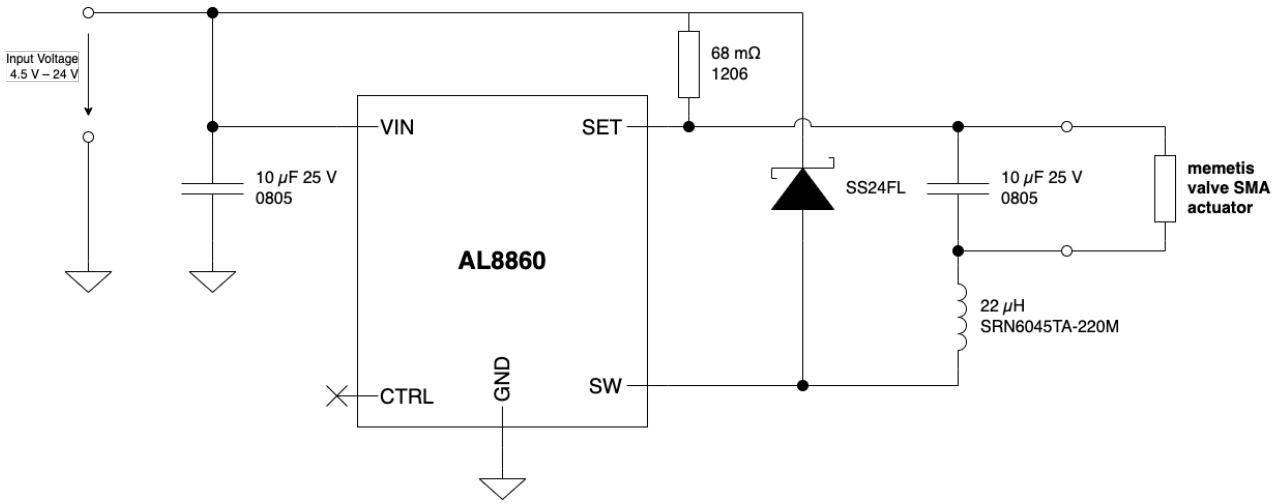

Figure 1: Exemplary circuit design for constant current source

Flow Rate Characteristic

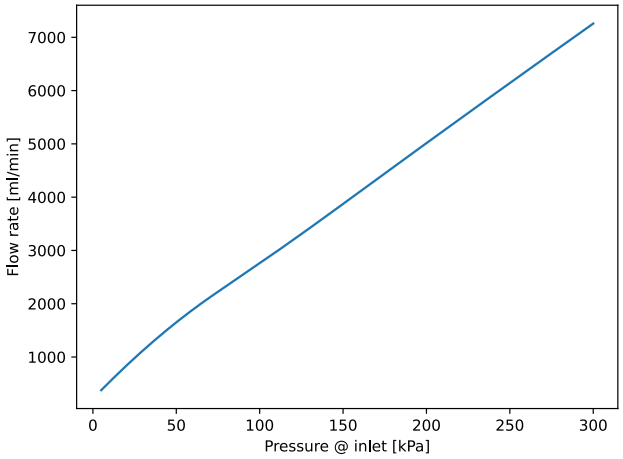

Figure 2: Flow rate characteristic for air at 20 °C, an applied pressure difference of 0.05 bar to 3 bar and a continuous electrical current of 500 mA.

Installation

memetis miniature valves have a flange mount connection. Two M1.6 screws are required for integration on a flat backplane with fluidic connection holes of 0.8 mm orifice. The o-rings needed for sealing interface are integrated underneath the valve.

Accessories

ECU-S1	Electronic control unit (on/off) for 1 valve
ECU-P2	Programmable and GUI supported electronic control unit for 2 valves
Tube adapters	Suitable for interfacing 1 or 2 valves with 1 mm ID silicone tubes
Threaded adapters	For 1, 2, 4 valves with a common inlet or outlet. Suitable for connecting UNF 10/32 threaded connectors, e.g., LUER® or IDEX®.



Figure 3: ECUs and valve adapters are available from the memetis online shop at shop.memetis.com

Contact Information

memetis GmbH
Gablonzer Str. 27
76185 Karlsruhe, Germany
Tel. +49 721 547000240
Email: support@memetis.com