A4

FLEXFLO® Peristaltic Metering Pump

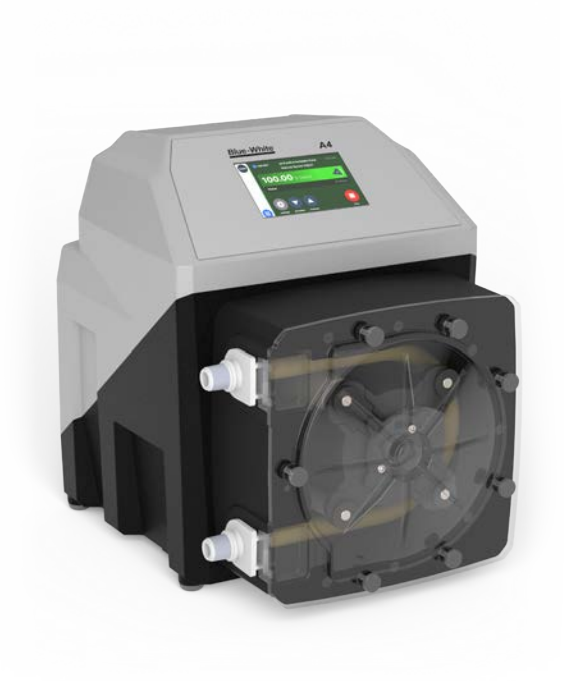

Features

> Self priming chemical metering pump delivers smooth chemical feed
> Tube Failure Detection (TFD) senses tube rupture
> Signal inputs include: 4-20mA, Pulse Inputs, Frequency Inputs
> Signal outputs include: 4-20mA Output, Frequency Output,
one 250V/6 AMP relay output, three 115V/1A

Video link:

NEMA 4X

Highlights

Flow range
.01 – 158 GPH
.04 – 600 LPH

Pressures
125 PSI
(8.6 bar)

Turndown ratio
2,500 : 1

Exclusive
Tube Failure Detection
(TFD)

Motor
Brushless
DC Motor

Warranty
2 Years

Control Methods

Control Methods	Manual Control	4-20mA Input	Remote Start/Stop	Pulse Input	Frequency Input	Ethernet/ IP	Modbus TCP/IP	Profibus	Alarm Outputs	FVS	Relay Ouput
A4V	•	•	•	•	•	•	•	•	•	•	•

For more help and information regarding **A4**, please visit www.blue-white.com or scan this QR code.

Engineering Specifications

Maximum Working Pressure	125 psig (8.6 bar)
	Note: see individual pump tube assembly maximum pressure ratings.
Maximum Fluid Temperature	Hose Barb and Tri-Clamp connections: 185 °F (85 °C)
	M/NPT connections: 185 °F (85 °C)
	Note: see individual pump tube assembly max temperature ratings.
Ambient Operating Temperature	14 °F to 115 °F (-10 °C to 46 °C)
Ambient Storage Temperature	-40 °F to 158 °F (-40 °C to 70 °C)
Maximum Viscosity	12,000 Centipoise
Maximum Suction Lift	30 ft. Water at sea level (14.7 atm psi)
Operating Voltage	115VAC/60Hz, 1ph (3.1 Amp Maximum)
	230VAC/60Hz, 1ph (1.6 Amp Maximum)
	220VAC/50Hz, 1ph (1.6 Amp Maximum)
	240VAC/50Hz, 1ph (1.5 Amp Maximum)
	230VAC/50Hz, 1ph (1.5 Amp Maximum)
Power Cord Options	115V60Hz = NEMA 5/15 (USA)
	230V60Hz = NEMA 6/15 (USA)
	220V50Hz = CEE 7/VII (EU)
	240V50Hz = AS 3112 (Australia/New Zealand)
	230V50Hz = BS 1363/A (UK)
Motor	Brushless DC, 1/4 HP
Motor Speed Adjustment Range	2,500:1 (0.04% – 100%) Max rpm = 125 rpm
Motor Speed Adjustment Resolution	0.1% increments > 1% motor speed and < 100%
	0.01% increments < 1% motor speed
Display	5” touchscreen color LCD, UV resistent
Display Languages	English, Spanish, French, German, and Portuguese selectable
Security	Programmable 6-digit password
Maximum Overall Dimensions	12-1/8”W x 15-1/4”H x 16-1/2”D (30.8W x 38.8H x 41.9D cm)
Product Weight	45.5 lb. (20.64 Kg)
Approximate Shipping Weight	50 lb. (22.68 Kg)
Enclosure	NEMA 4X (IP66), Polyester powder coated aluminum & Noryl
RoHS Compliant	Yes
Standards	cETLus, CE

Dimensions

Dim	Inch	cm	Dim	Inch	cm
A	12.1”	30.8	**E**	2.7”	6.8
B	15.3”	38.8	**F**	9.3”	23.5
C	16.5”	41.9	**G**	11.0”	27.8
D	5.9”	15.0	**H**	11.5”	29.2

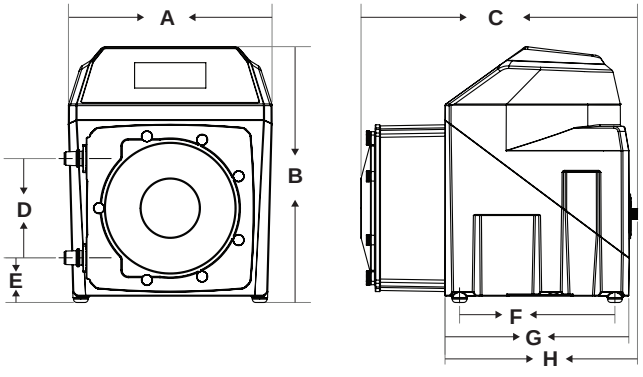

Materials of Construction

Non-wetted Components:
Pump Head: Valox® (PBT) thermoplastic
Pump Head Cover: Polycarbonate
Permanently lubricated sealed motor shaft support ball bearing.
Cover Screws: Stainless steel
Roller Assembly:
Rotor: Valox® (PBT)
Rollers: Nylon
Roller Bearings: SS Ball Bearings
Motor Shaft: Chrome plated steel
TFD System Sensor: Hastelloy C-276
Power Cord: 3 conductor, SJTW-A water-resistant
Tube Installation Tool: GF Nylon
Mounting Brackets and Hardware: 316 Stainless steel

Wetted Components:	
Pump Tube Assembly:	Tubing: Flex-A-Prene®, Flex-A-Chem or Flex-A-Thane®
	Adapter Fittings: PVDF
Injection / Back-Flow Check Valve (With "B" Tubing and "M" M/NPT Connections Only):	Body & Insert: PVDF
	Check Ball: Ceramic
	Spring: Hastelloy C-276
	Ball Seat O-Ring: TFE/P (optional EPDM)
	Static Seal O-Ring: TFE/P (optional EPDM)

Ancillary Items Provided:	
With "B" Tubing and "M" M/NPT Connections Only:	**Suction Strainer:**
	Body/Connector: PVDF
	Ball Seat O-Ring: TFE/P (Optional EP)

** Flex-A-Prene®, Flex-A-Thane®, and Flex-A-Chem® tubing comply with FDA 21 CFR, 117.2600 criteria for food processing.

Ancillary Items Not Included (sold separately):
Suction Tubing/Pipe, Discharge Tubing/Pipe, Quick Disconnect Valves, or Communications Wire/Cable.

Output Specifications

Tube Material / Size	Feed Rate			Max Pressure	Max Temperature
	GPH	LPH	mL/Min	PSI (bar)	°F (°C)
Flex-A-Thane®					
GH	.01 - 39.6	.06 - 150	1.0 - 2500	65 (4.5)	130 (54)
GHH	.03 - 71	.11 - 269	1.9 - 4480	65 (4.5)	130 (54)
GK	.02 - 55.5	.09 - 210	1.4 - 3500	65 (4.5)	130 (54)
GKK	.04 - 100	.20 - 378	2.5 - 6300	65 (4.5)	130 (54)
Flex-A-Prene®					
NH	.01 - 28.5	.04 - 108	0.7 - 1800	125 (8.6)	185 (85)
NHL	.02 - 28.5	.07 - 108	1.2 - 1800	65 (4.5)	185 (85)
NK	.02 - 50.7	.08 - 192	1.3 - 3200	80 (5.5)	185 (85)
NHH	.02 - 54.0	.09 - 204	1.4 - 3400	100 (6.9)	185 (85)
NHHL	.02 - 54.0	.09 - 204	1.4 - 3400	65 (4.5)	185 (85)
NL	.04 - 100.0	.15 - 378	2.5 - 6300	50 (3.4)	185 (85)
NP	.06 - 158.5	.24 - 600	4.0 - 10000	30 (2.1)	185 (85)
Flex-A-Chem®					
TH	.01 - 25.4	.04 - 96.0	0.6 - 1600	30 (2.1)	130 (54)
TK	.02 - 54.0	.08 - 204	1.4 - 3400	30 (2.1)	130 (54)
TKK	.05 - 126	.18 - 477	3.2 - 7950	30 (2.1)	130 (54)

Model Number Matrix

FLEXFLO® Model Number

A4	FLEXFLO® A4 Peristaltic Metering Pump

Power Cord (operating voltage requirement 96VAC to 264VAC)

4	115V / 60HZ, power cord NEMA 5/15 plug (US)
6	220V / 50HZ, power cord CEE 7/VII plug (EU)
X	No Power Cord

Inlet/Outlet Connection Size, Connection Type, Connection Material

M	1/2” Male NPT Fitting, Natural PVDF (Kynar)
B	1/2” ID Tubing Barb Fitting, Natural PVDF (Kynar)
C	1/2” - 3/4” Tri-clamp connections, Natural PVDF (Kynar)
Q	Quick Disconnect, Natural PVDF (Kynar), NP flow rate reduced 16.5% with Quick Disconnect connections (Valves sold separately)
MB	1/2” Male BSPT Fitting, Natural PVDF (Kynar)

Pump Tube Material, Pump Tube Size

NOTE: * = Dual tube

NH	Flex-A-Prene® .250 ID | .01–28.5 GPH | 125 PSI	**GH**	Flex-A-Thane® .312 ID | .01–39.6 GPH | 65 PSI
NHH*	Flex-A-Prene® .250 ID | .02–54.0 GPH | 100 PSI	**GHH***	Flex-A-Thane® .312 ID | .03–71 GPH | 65 PSI
NHHL*	Flex-A-Prene® .250 ID | .02–54.0 GPH | 65 PSI	**GK**	Flex-A-Thane® .375 ID | .02–55.5 GPH | 65 PSI
NHL	Flex-A-Prene® .250 ID | .01–28.5 GPH | 65 PSI	**GKK***	Flex-A-Thane® .375 ID | .04–100 GPH | 65 PSI
NK	Flex-A-Prene® .375 ID | .02–50.7 GPH | 80 PSI	**TH**	Flex-A-Chem® .250 ID | .01–25.4 GPH | 30 PSI
NL	Flex-A-Prene® .500 ID | .04–100.0 GPH | 50 PSI	**TK**	Flex-A-Chem® .375 ID | .02–54.0 GPH | 30 PSI
NP	Flex-A-Prene® .750 ID | .06–158.5 GPH | 30 PSI	**TKK***	Flex-A-Chem® .375 ID | .05–126 GPH | 30 PSI

Options (leave this blank for standard model with left facing head)

R	Right facing pump head, input / output
D	Down facing pump head, input / output

A4	**S**	**V**	**2**	**4**	**-**	**M**	**NH**		**Sample Model Number**

Accessories



1/4” x 3/8” “S” Fitting
1/2” Hose Barb “B” Fitting
1/2” MNPT “M” Fitting

Quick Disconnects

*KIT-QSV FKM O-RINGS	*KIT-QBV FKM	*KIT-QMV FKM
*KIT-QSE EP O-RINGS	*KIT-QBE EP	*KIT-QME EP



KIT-PSM
Wall Mount Bracket, HDPE



KIT-M12
Two M12 Cables - 9.8 ft.

90010-663 115V/60Hz NEMA 5/15
90010-664 220V/50Hz CEE 7/V11
90010-665 230V/50Hz BS 1363/A
90010-666 240V/50Hz AS 3112
90010-696 230V/60Hz NEMA 6/15

POWER CABLES - 6 ft



KIT-DP3
Profibus Cable, 3 ft

Visit Accessory Pages for More Options

5300 Business Drive, Huntington Beach, CA 92649
TEL 714-893-8529 | FAX 714-894-9492 | www.blue-white.com | sales@blue-white.com
ISO 9001:2015 CERTIFIED
SINCE Quality 1957
MADE IN THE USA