INSTALLATION INSTRUCTIONS
Micro Flow - FVS (Flow Verification Sensor)



Electronic Flow Verification

Are you sure the pump is actually pumping?

Empty chemical tank, clogged injection fitting, lost prime, an other problems can prevent a metering pump from actually injecting chemical - even though the pump is in good working order.

Installation Options

The Micro Flow FVS (Flow Verification Sensor) is designed to give you many installation options.

The sensor can be installed:

- Directly on the pumphead of a Blue-White pump (see next page).
- Anywhere on the discharge side of a diaphragm pump.
- Anywhere on the suction side of a peristaltic pump.

The wiring for the sensor can be connected directly to a Blue-White pump. The pump will stop pumping if the sensor detects no flow. A relay will then close allowing for remote alarm indication or initiation of a back-up injector pump.

Blue-White® Industries, Ltd.
5300 Business Drive | Huntington Beach | CA | 92649 | USA

Installation Guideline

The Micro Flow FVS can be connected directly to many Blue-White injector pumps (see table below). The sensor will verify that chemical injection has actually occurred. The pumps sophisticated electronics continuously monitor the sensor. If chemical should fail to inject, the pump will stop and an alarm relay will close - allowing for remote alarm indication and/or initiation of a back-up injector pump.

Recommended sensor mounting locations differ from diaphragm pump to peristaltic pump.

Diaphragm pump installation; the sensor should be mounted on the discharge (outlet) side of the pumphead. The sensor can be mounted directly on the pumphead or anywhere along the tubing on the discharge side of the pump.

Peristaltic pump installation; the sensor should be mounted on the suction (inlet) side of the pumphead.



A-100NV
Peristaltic Pump



C-1100V
Diaphragm Pump



C-1500NK
Diaphragm Pump

Blue-White FVS compatible metering pumps:

Pump Series	Pump Type	Pump Description	Pump Shut-Down Time*	FVS Installation Location
A-100NV	Peristaltic	Variable speed	User programmable (up to 256 seconds)	Suction side of pump head
A-100NA	Peristaltic	Fixed speed timer controlled	6 seconds	Suction side of pump head
A-100NF	Peristaltic	Fixed speed timer controlled	6 seconds	Suction side of pump head
C-1100V	Diaphragm	Variable speed	User programmable (up to 256 seconds)	Discharge side of pump head
C-1100A	Diaphragm	Fixed speed timer controlled	6 seconds	Discharge side of pump head
C-1100F	Diaphragm	Fixed speed timer controlled	6 seconds	Discharge side of pump head
C-1500NK	Diaphragm	Fixed speed timer controlled	6 seconds	Discharge side of pump head

* Pump Shut-Down Time = If chemical should fail to inject in the amount of time specified, the pump will automatically shut-down, also triggering an alarm relay.

Your flow verification sensorpackage includes a Foot Strainer (see diagram below). This strainer will prevent any small particles from entering and clogging the Micro Body. Diaphragm pumps will require a strainer and a check valve. The part number for the strainer that includes a check valve is C-340A. Blue-White peristaltic pumps do not require a check valve.

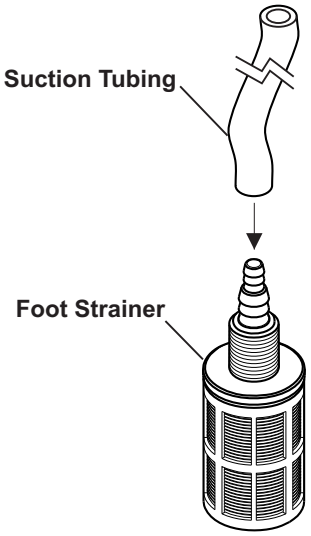

Part Number C-340X

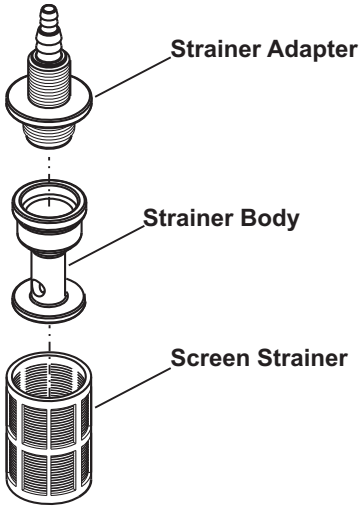

Exploded View

Wiring Diagram

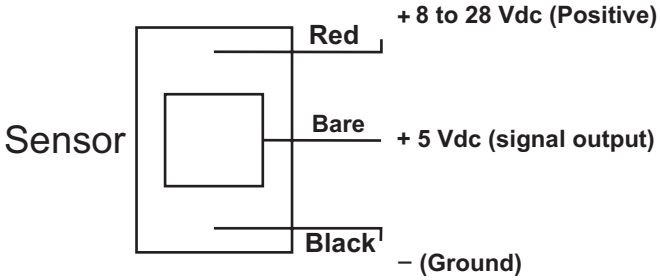



(True digital Square-wave output)

Sensor connections:
Input voltage (vdc) 8 to 28 vdc
Output voltage (v) “high state” 4 80 v dc min (5 vdc normal)
Output voltage (v) “low state” 0 2v dc max

K-Factors (pulses per fluid volume)

Body Size	Flow Range (ml/min)	Pulses per Gallon	Pulses per Liter
1	30-300	181,336	47,909
2	100-1000	81,509	21,535
3	200-2000	42,051	13,752
4	300-3000	25,153	6,646
5	500-5000	15,737	4,157
6	700-7000	9,375	2,477

Useful formulas

60 / K = rate scale factor

rate scale factor x Hz = flow rate in volume per minute

1 / K = total scale factor

total scale factor x n pulses = total volume

Temperature vs. Pressure

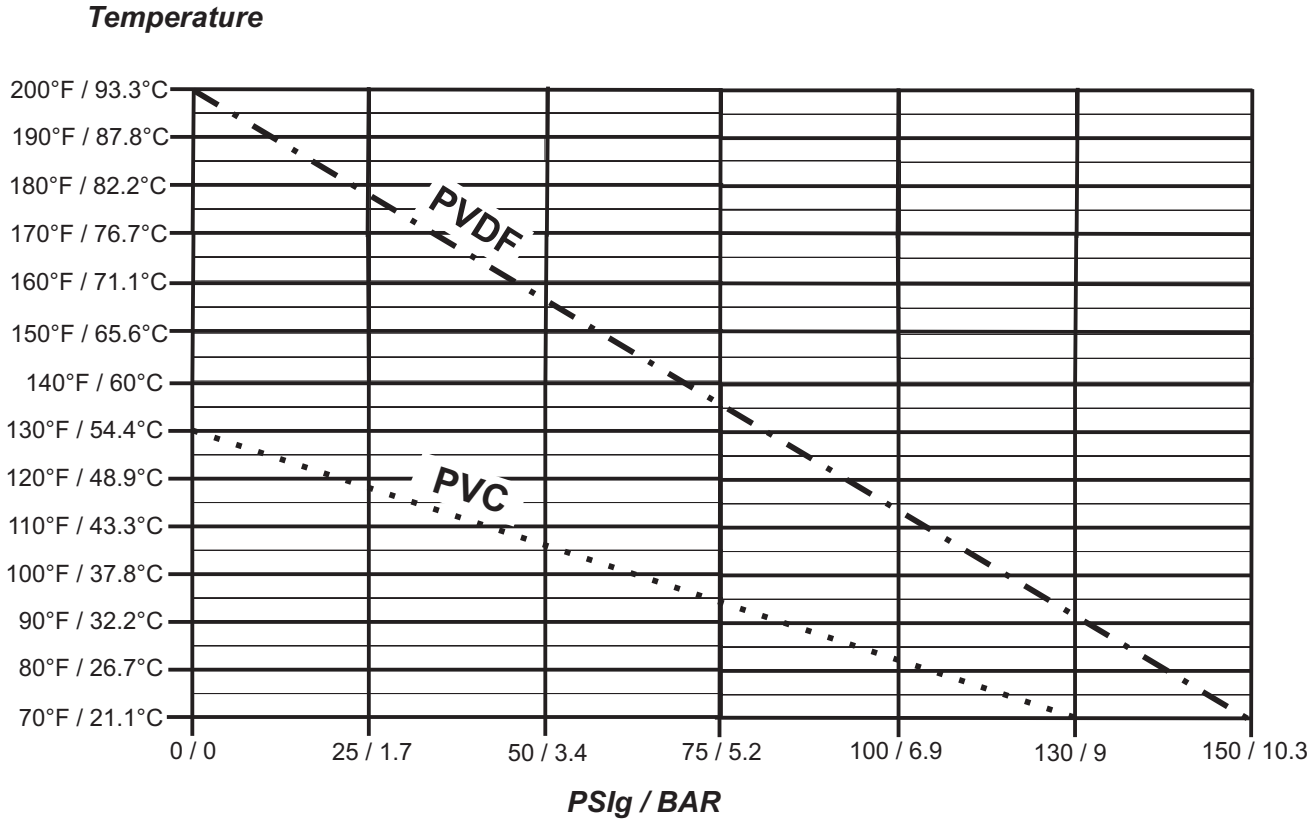

Pressure and Temperature

Pressure and temperature limits are inversely proportional. At the maximum suggested pressure the temperature should approach 70°F / 21.1°C. At the maximum suggested temperature the pressure should approach zero psi. We cannot guarantee our flowmeters will not be damaged either at or below the suggested limits simply because of many factors which influence meter integrity; stress resulting from meter misalignment, damage due to excessive vibration and/or deterioration caused by contact with certain chemicals as well as direct sunlight. These situations and others tend to reduce the strength of the materials from which the meters are manufactured.

Application Note

Although meters may be suitable for other chemicals, Blue-White cannot guarantee their suitability. It is the responsibility of the user to determine the suitability of the flowmeter in their application.

Exploded View and Parts List

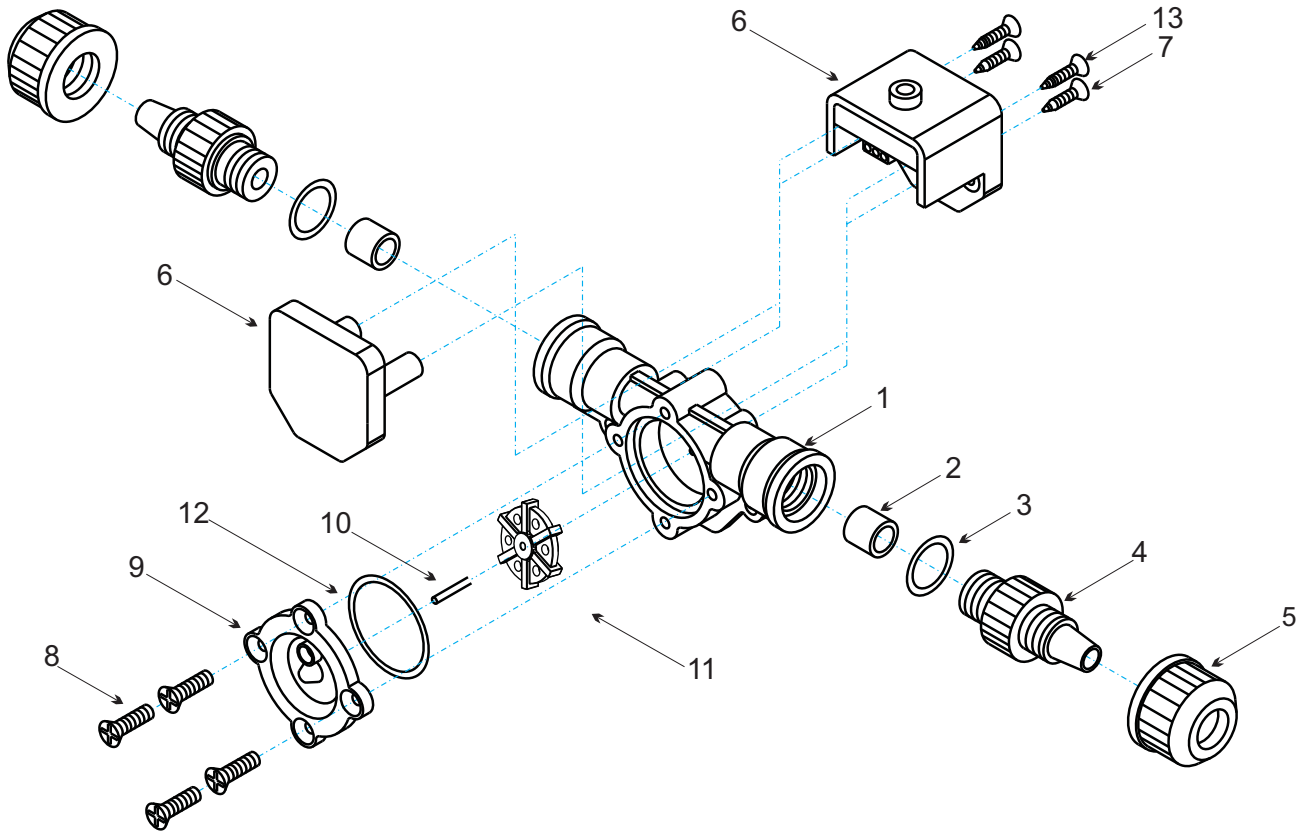

Item	Description	Catalog number	Quantity
1.	Micro-Body .031 30-300ml/min	76001-300	1
	.062 100-1000ml/min	76001-301	
	.093 200-2000ml/min	76001-302	
	.125 300-3000ml/min	76001-303	
	.156 500-5000ml/min	76001-304	
	.187 700-7000ml/min	76001-305	
2.	Tubing, PVC	76001-299	2
3.	O-Ring, Viton	90003-012	2
4.	Adapter .250” F/NPT, PVC	76000-137	2
	Adapter .125” F/NPT, PVC	76000-456	
	Adapter .375” Tubing Connection, PVDF	90002-038	
	Adapter .250” Tubing Connection, PVDF	90002-042	
	Adapter .500” ID Hose Barb, PVC	76001-360	
	Adapter .500” F/NPT, PVC	76001-359	
	Adapter .500” M/NPT, PVC	76001-358	
5.	Tube Nut	90002-305	2
6.	Sensor Assembly	71010-182	1
7.	Screws, SS	90011-113	2
8.	Screws, SS	90011-190	4
9.	Lens Cap, PVC (Optional PVDF)	90002-227	1
10.	Axel, PVDF	90007-592	1
11.	Paddle, PVDF	90002-229	1
12.	O-Rng, Viton	90003-143	1
13.	Screws, #4x.50 Phil Blk	90011-178	2

NOTE: The “Exploded View” drawing illustrates assembly of the FVS (Flow Verification Sensor) If your FVS needs to be cleaned refer to this drawing when reassembling the unit.

Blue-white Industries
Limited Warranty

FVS Sensors are warranted to be free of defects in material and workmanship for up to 12 months from the date of factory shipment. Warranty coverage is limited to repair or replacement of the defective flowmeter only. Blue-White Industries does not assume responsibility for any other damage that may occur.

This warranty does not cover damage to the FVS sensors that results from misuse or alterations, nor damage that occurs as a result of: meter misalignment, improper installation, over tightening, use of non- recommended chemicals, use of non-reccomended adhesives or pipe dopes, excessive heat or pressure, or allowing the meter to support the weight of related piping. FVS Sensors are tested and calibrated with water and air only. Although meters may be suitable for other chemicals, Blue-White cannot guarantee their suitability.

FVS Sensors are repaired at the factory only. Call or write the factory to receive a Return Authorization Number, carefully pack the FVS to be returned, including a brief description of the problem. Note the RA number on the outside of the carton.

Prepay all shipping costs. The factory does not accept COD Shipments. Damage that occurs during shipping is the responsibility of the sender.

BLUE-WHITE INDUSTRIES
5300 Business Drive, Huntington Beach, CA 92649
(714) 893-8529 • FAX (714) 894-9492

URL: www.Blue-White.com
E-mail: sales@blue-white.com
Techsupport@blue-white.com
Phone: 714-893-8529
Fax: 714-894-0149



Users of electrical and electronic equipment (EEE) with the WEEE marking per Annex IV of the WEEE Directive must not dispose of end of life EEE as unsorted municipal waste, but use the collection framework available to them for the return, recycle, recovery of WEEE and minimize any potential effects of EEE on the environment and human health due to the presence of hazardous substances. The WEEE marking applies only to countries within the European Union (EU) and Norway. Appliances are labeled in accordance with European Directive 2002/96/EC.
Contact your local waste recovery agency for a *Designated Collection Facility* in your area.