Blue-White®

Industries, Ltd.

Variable Area Flow Meters

Engineering and Technical Data

F-420N

1” F/NPT, 1-1/2” M/NPT

Rod Guided Float



Features:

- **Tough machined acrylic meter body, highly polished to a clear finish.**
- **Direct reading permanent scale.**
- **White back reflector for easy reading.**
- **1” F/NPT or 1-1/2” M/NPT adapters with high grade Viton o-ring seals .**
- **316 stainless steel or Hastelloy rod guided floats.**
- **Acceptable in direct sunlight applications.**

Materials of Construction:

Meter Body: .....Cast Acrylic Rod
Adapters: .....PVC
Guide Rod Holder: .....Polysulfone
O-ring seals: .....Viton® (optional EP)
Float:
Standard Series 316SS
K- Series .....Hastelloy
Guide Rod:
Standard Series 316SS
K- Series .....Hastelloy

Specifications:

Max. working pressure:.....130 PSI (8.9 bar) @ 70° F (21° C)
Max. Fluid Temperature:.....130° F (54° C) @ 0 PSI
Full scale accuracy:.....+/- 5%
Calibration fluid: .....water, specific gravity 1.0
Scale length: .....4” (100mm)
Environment:.....Acceptable for direct sunlight exposure.
Maximum pressure drop: .....2 PSI
Approximate shipping wt: ...2 lb. (.91 kg)

Maximum Temperature vs. Pressure

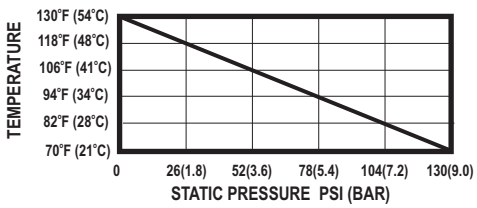

Dimensions:

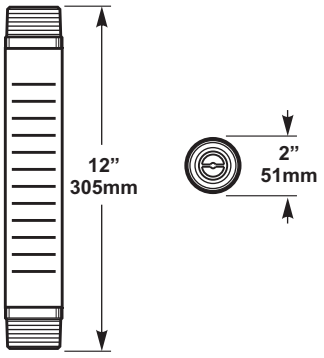

Blue-White® Industries, Ltd.

Variable Area Flow Meters

Installation Requirements:

1. Misalignment will damage the meter!

Flowmeter must be installed in an exact vertical plane to ensure accuracy. Be certain of proper plumbing alignments. Misalignment may cause the o-ring seals to leak.

2. Pipe dope and glue will damage the meter!

Use only PTFE tape on the threaded adapters. The meter body and plastic fittings cannot tolerate PVC Glue and/or pipe dope. Even fumes can cause severe damage. If you are installing your flowmeter to a glued pipe configuration, install the flowmeter *after* all glued fittings are dried and lines are purged of all fumes. **Never** hold the meter body with pliers or like tools. **DO NOT OVER-TIGHTEN!**

3. Vibration and heavy loads will damage the meter!

Wall, floor and ceiling mounts and supports must be carefully aligned with the meter body and sturdy enough to support the plumbing and prevent vibration. Never allow the flowmeter to support the weight of related piping.

4. Solenoid valves will damage the meter!

Avoid a system that will impose a sudden burst of flow to the meter. Such a burst will cause the float to impact the float stop with destructive force. Solenoid valves, or other quick opening valves cannot be used unless meter is protected against sudden bursts of flow.

5. High pressures and temperatures will damage the meter!

The maximum acceptable temperature and pressure is interdependent. The maximum acceptable working pressure is dependant on the actual fluid temperature. The maximum acceptable fluid temperature is dependant on the actual working pressure. (see Temperature Vs. Pressure chart).

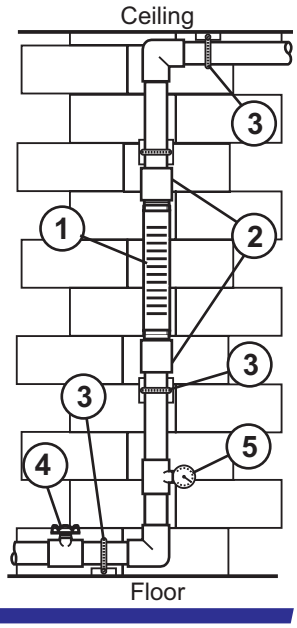

Flow Range and Model Options:

Standard Series

- Equipped with 316 SS guide rod

MODEL NUMBER	Dual Scale Range GPM	LPM	Adapter Pipe Size	Adapter Material	Float Material
F-42025LN-16	5 to 25	20 to 100	1” F/NPT	PVC	316 SS
F-42025LN	5 to 25	20 to 100	1-1/2” M/NPT	PVC	316 SS
F-42040LN-16	8 to 40	30 to 150	1” F/NPT	PVC	316 SS
F-42040LN	8 to 40	30 to 150	1-1/2” M/NPT	PVC	316 SS
F-42050LN-16	10 to 50	40 to 200	1” F/NPT	PVC	316 SS
F-42050LN	10 to 50	40 to 200	1-1/2” M/NPT	PVC	316 SS

K-Series

- Equipped with Hastelloy guide rod

K-Series models are specially equipped for highly corrosive applications.

MODEL NUMBER	Dual Scale Range GPM	LPM	Adapter Pipe Size	Adapter Material	Float Material
F-42025LK-16	5 to 25	20 to 100	1” F/NPT	PVC	Hastelloy
F-42025LK	5 to 25	20 to 100	1-1/2” M/NPT	PVC	Hastelloy
F-42040LK-16	8 to 40	30 to 150	1” F/NPT	PVC	Hastelloy
F-42040LK	8 to 40	30 to 150	1-1/2” M/NPT	PVC	Hastelloy
F-42050LK-16	10 to 50	40 to 200	1” F/NPT	PVC	Hastelloy
F-42050LK	10 to 50	40 to 200	1-1/2” M/NPT	PVC	Hastelloy

Notes: Models calibrated with water, Sp.Gr. 1.0. Custom Sp.Gr. calibrations available. Contact the factory.

Blue-White® Industries, Ltd.
5300 Business Drive, Huntington Beach, CA 92649
Tel: 714-893-8529 **Fax:** 714-894-9492
www.blue-white.com **Email:** sales@blue-white.com

All trademarks are the property of their respective owners.
Technical data sheet #85000-034 rev.01182017