English

Signet 2000 Micro Flow Sensor

3-2000.090-1 Rev. 6 01/19

Operating Instructions

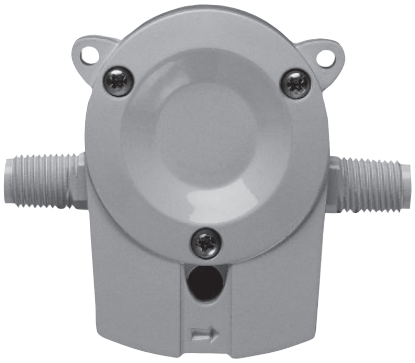

Description

The Signet 2000 Micro Flow Rotor Sensor is constructed of Polyphenylene Sulfide (PPS) which provides high material strength. The 2000 offers two flow ranges starting at 0.11 or 1.13 lpm (0.03 or 0.3 gpm), for clean process liquids, regardless of fluid color or opacity.

This sensor can be connected to flexible tubing or rigid pipe, and uses standard hardware for mounting. Only one moving part and a low pressure drop across the sensor reduces operating costs and maintenance requirements.

Features

- Operating range 0.11 to 12.11 lpm (0.03 to 3.2 U.S. gpm)
- Simple mounting
- ¼ in. NPT or ISO threads for simple pipe or tubing connection
- Measures opaque and transparent liquids
- Low pressure drop
- Standard cable 7.6 m (25 ft)

Table of Contents

Warranty Statement 2
Product Registration 2
Chemical Compatibility 2
Safety Information 2
Dimensions 2
Specifications 3
Compatible Instrument Wiring 3
Recommended Sensor Position 3
Sensor Mount Instructions 4
Fittings Installation 4
K-Factors 4
Ordering Information 4

- English
- Deutsch
- Français
- 中文

Warranty Information

Refer to your local Georg Fischer Sales office for the most current warranty statement.

All warranty and non-warranty repairs being returned must include a fully completed Service Form and goods must be returned to your local GF Sales office or distributor. Product returned without a Service Form may not be warranty replaced or repaired.

Signet products with limited shelf-life (e.g. pH, ORP, chlorine electrodes, calibration solutions; e.g. pH buffers, turbidity standards or other solutions) are warranted out of box but not warranted against any damage, due to process or application failures (e.g. high temperature, chemical poisoning, dry-out) or mishandling (e.g. broken glass, damaged membrane, freezing and/or extreme temperatures).

Product Registration

Thank you for purchasing the Signet line of Georg Fischer measurement products.
If you would like to register your product(s), you can now register online in one of the following ways:

- Visit our website **www.gfsignet.com** and click on **Product Registration Form**
- If this is a pdf manual (digital copy), **click here**

Safety Information

1. Depressurize and vent system prior to installation/removal.
2. Confirm chemical compatibility before use.
3. Do not exceed maximum temperature/pressure specifications.
4. Wear safety goggles or faceshield during installation/service.
5. Do not alter product construction.

	**Warning / Caution / Danger** Indicates a potential hazard. Failure to follow all warnings may lead to equipment damage, injury, or death
	**Personal Protective Equipment (PPE)** Always utilize the most appropriate PPE during installation and service of Signet products.
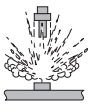	**Pressurized System Warning** Sensor may be under pressure, take caution to vent system prior to installation or removal. Failure to do so may result in equipment damage and/or serious injury.
	**Note / Technical Notes** Highlights additional information or detailed procedure.

Dimensions

Top View

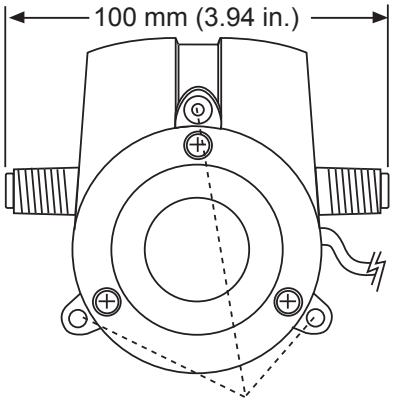

Mounting tabs for metric M3 or standard #6 screws on 68 mm (2.68 in.) bolt circle

Side View

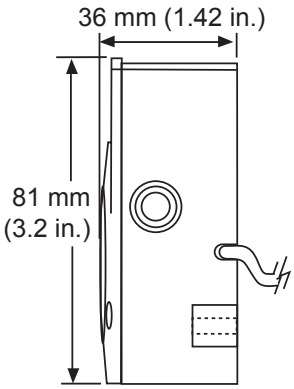

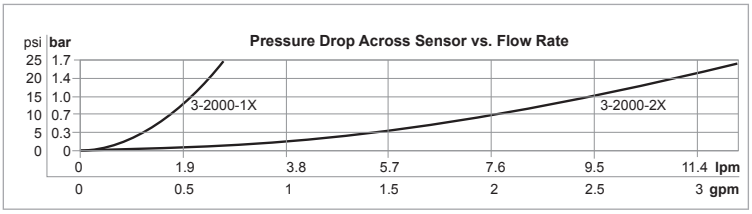

Specifications

General

Flow Range:
-11 & -12 version.....0.11 to 2.6 lpm (0.03 to 0.7 gpm)
-21 & -22 version.....1.13 to 12.11 lpm (0.3 to 3.2 gpm)
Linearity.....±1.2% of full range
Repeatability.....±0.5% of full range
Connections.....1/4 in. NPT (male) or ISO 7/1 - R1/4 (male)

Wetted Materials

Sensor Body and Cover ....40% glass filled Polyphenylene Sulfide
Rotor.....PEEK®, natural, unfilled
Cover O-ring.....FKM

Electrical

Power .....5 to 24 VDC ±10%, regulated, 10 mA max.
Output type: Open-collector, sinking, 10 mA max.
Cable Length .....7.6 m (25 ft), can be extended up to 300 m (1000 ft)
Cable Type .....2-conductor twisted pair w/shield (Belden 8451)

Max. Pressure/Temperature Ratings

0 °C to 80 °C (32 °F to 176 °F) @ 5.5 bar (80 psi) max

Shipping Weight

250 g (9.6 oz)

Standards and Approvals

- Manufactured under ISO 9001 for Quality and ISO 14001 for Environmental Management and OHSAS 18001 for Occupational Health and Safety

PEEK® is a registered trademark of Victrex plc.

Compatible Instrument Wiring

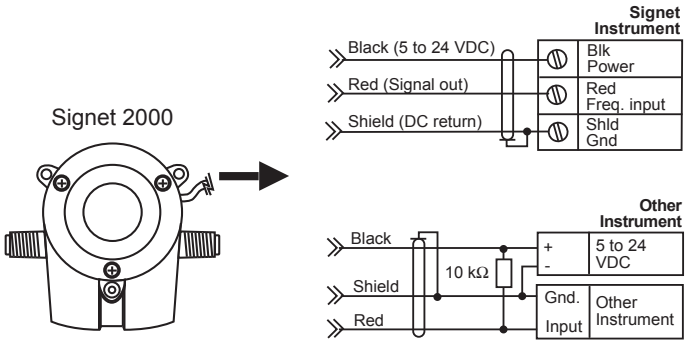

Technical Notes:

- Use 2-conductor twisted-pair shielded cable for sensor cable splices up to 300 m (1000 ft) max.
- Maintain cable shield through cable splice.
- Route sensor cable away from AC power lines.
- AUX power required when used with any Signet 8550 Process Pro Flow Transmitter.

Recommended Sensor Position

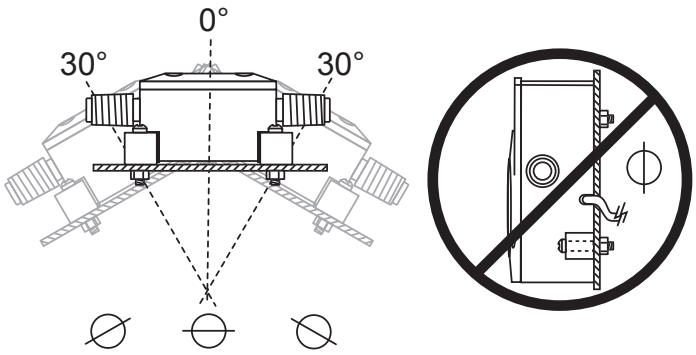

Recommended mounting angles

Vertical mounting not recommended

Technical Notes:

- Horizontal surface mount (±30°) recommended for optimum performance.
- Suitable for clean fluids only. Suspended solids will cause mechanical failure.
- 1/4 in. NPT or ISO 7/1 - R1/4 (male) port connections
- NEMA 4X/IP65 splashproof enclosure.

Sensor Mount Instructions

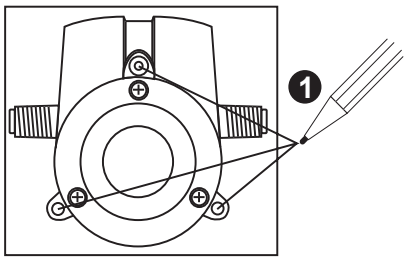

Mounting surface

2 Remove sensor then use correct screws for panel material.

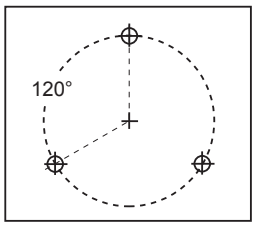

Mounting surface (top), 68 mm (2.68 in.) bolt circle

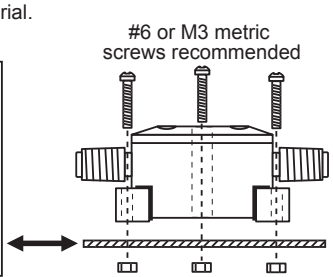

Mounting surface (side)

Fitting Installation

CAUTION:
- Maximum pipe fitting torque: 13 Nm (10 lb)
- DO NOT overtighten. Failure to observe torque specification may permanently damage sensor ports.

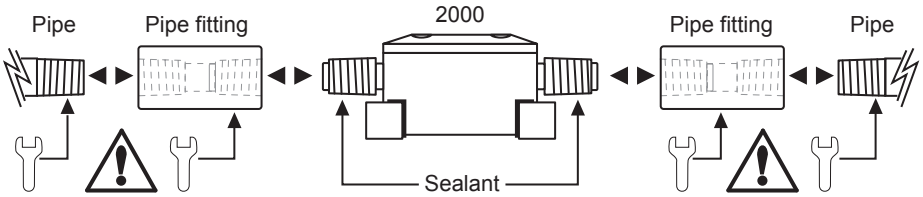

Technical Notes:
- Compatible fittings (customer supplied): Female union (shown), reducer, or hose barb type.
- Always apply thread sealant to sensor port threads to prevent leakage.

K-Factors

The K-Factors listed below represent the number of pulses the sensor will generate for each engineering unit of fluid which passes. They are listed in U.S. gallons, liters and ml by sensor model:

K-FACTORS

Sensor Model	Pulses per U.S. GAL	Pulses per Liter	Pulses per ml
3-2000-11	9950	2629	2.629
3-2000-12	9950	2629	2.629
3-2000-21	3160	834.9	0.835
3-2000-22	3160	834.9	0.835

Conversion Formulas:

1 U.S. gallon = 0.83267 Imperial gallon

Ordering Information

Mfr. Part No.	Code	Description
3-2000-11	198 822 000	Micro Flow Sensor, low w/0.25 in. NPT
3-2000-12	198 822 001	Micro Flow Sensor, low w/ISO 7/1-R1/4
3-2000-21	198 822 002	Micro Flow Sensor, high w/0.25 in. NPT
3-2000-22	198 822 003	Micro Flow Sensor, high w/ISO 7/1-R1/4

Accessories

Mfr. Part No.	Code	Description
3-2000.390	198 820 050	Replacement rotor kit
1220-0029	198 820 049	Cover O-ring
2450-0620	198 820 051	Cover screw
5523-0222	159 000 392	Cable (per foot), 2 cond. w/shield, 22 AWG

+GF+

Georg Fischer Signet LLC, 3401 Aero Jet Avenue, El Monte, CA 91731-2882 U.S.A. • Tel. (626) 571-2770 • Fax (626) 573-2057
For Worldwide Sales and Service, visit our website: www.gfsignet.com • Or call (in the U.S.): (800) 854-4090
For the most up-to-date information, please refer to our website at www.gfsignet.com

3-2000.090 Rev. 6 01/19 English
© Georg Fischer Signet LLC 2019