English

Signet 2507 Mini Flow Sensor

3-2507.090 Rev. 20 03/19

Operating Instructions



Description

WARNING! Polar organic solvents (i.e., ketones and chlorinated hydrocarbons) and aromatic hydrocarbons are not compatible with this sensor.

The Signet 2507 Mini Flow Sensor contains a free-running rotor which is driven by the fluid flow. Within the given measurement range, the rotational speed of the rotor is proportional to the fluid flow rate. Permanent magnets built into the rotor actuate an electronic switch in the top of the sensor generating a square-wave output signal proportional to flow rate. Both opaque and transparent fluids can be measured from 0.2 to 20.0 centistokes.

Wetted sensor parts are constructed of PVDF and FKM, making the sensor suitable for use with most process fluids, including most acids, bases, light oils, and solvents.

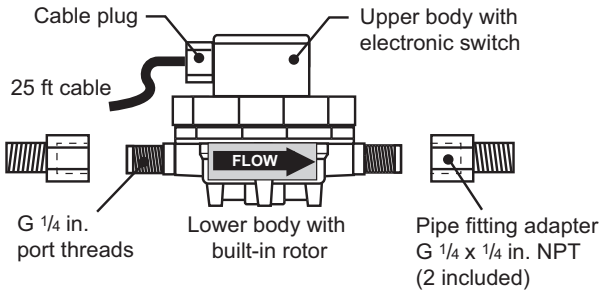

Ordering Information

Mini Flow low flow sensor with free-running rotor

Mfr. Part No.	Code	Insert Option
3-2507.100-1V	**198 801 731**	With 1 mm insert; for 100 to 2000 mL/m (0.026 to 0.528 gpm) (**available in Europe only**)
3-2507.100-2V	**198 801 732**	With 2 mm insert; for 0.15 to 0.740 gpm (400 to 2800 mL/m)
3-2507.100-3V	**198 801 733**	With 3 mm insert, for 0.185 to 1.123 gpm (700 to 4200 mL/m)
3-2507.100-4V	**198 801 734**	With 4 mm insert, for 0.343 to 1.585 gpm (1300 to 6000 mL/m)
3-2507.100-6V	**198 801 736**	With 6 mm inlet, no insert, for 0.845 to 3.170 gpm (3200 to 12000 mL/m)

Accessories and Replacement Parts

Mfr. Part No.	Code	Description
3-2507.080-2	**198 801 550**	Rotor, 2507
3-2507.080-3	**198 801 547**	Quad ring, 2507
3-2507.080-5	**198 801 508**	DIN connector, 2507
3-2507.081-2	**198 801 502**	2 mm insert
3-2507.081-3	**198 801 503**	3 mm insert
3-2507.081-4	**198 801 558**	4 mm insert
5523-0222	**159 000 392**	Cable (per foot), 2 cond. w/shield, 22 AWG

- English
- Deutsch
- Français
- 中文

Warranty Information

Refer to your local Georg Fischer Sales office for the most current warranty statement.

All warranty and non-warranty repairs being returned must include a fully completed Service Form and goods must be returned to your local GF Sales office or distributor. Product returned without a Service Form may not be warranty replaced or repaired.

Signet products with limited shelf-life (e.g. pH, ORP, chlorine electrodes, calibration solutions; e.g. pH buffers, turbidity standards or other solutions) are warranted out of box but not warranted against any damage, due to process or application failures (e.g. high temperature, chemical poisoning, dry-out) or mishandling (e.g. broken glass, damaged membrane, freezing and/or extreme temperatures).

Product Registration

Thank you for purchasing the Signet line of Georg Fischer measurement products.
If you would like to register your product(s), you can now register online in one of the following ways:

- Visit our website **www.gfsignet.com.** Under **Service and Support** click on **Product Registration Form**
- If this is a pdf manual (digital copy), **click here**

Safety Information

1. Do not remove from pressurized lines.
2. Confirm chemical compatibility before use.
3. Do not exceed maximum temperature/pressure specifications.
4. Wear safety goggles or faceshield during installation/service.
5. Do not alter product construction.
6. Failure to follow safety instructions could result in severe personal injury.

	**Caution / Warning / Danger** Indicates a potential hazard. Failure to follow all warnings may lead to equipment damage, injury, or death
	**Electrostatic Discharge (ESD) / Electrocution Danger** Alerts user to risk of potential damage to product by ESD, and/or risk of potential of injury or death via electrocution.
	**Personal Protective Equipment (PPE)** Always utilize the most appropriate PPE during installation and service of Signet products.
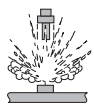	**Pressurized System Warning** Sensor may be under pressure, take caution to vent system prior to installation or removal. Failure to do so may result in equipment damage and/or serious injury.
	**Hand Tighten Only** Overtightening may permanently damage product threads and lead to failure of the retaining nut.
	**Do Not Use Tools** Use of tool(s) may damage product beyond repair and potentially void product warranty.

Specifications

General

Compatibility ..... Signet 8550 Flow Transmitter
Signet 8900 Multi-Parameter Controller
Signet 9900 Transmitter

Operating Range
- -1V sensor..... 100 to 2000 mL/m (0.026 to 0.528 U.S. gpm) (available in Europe only)
- -2V sensor..... 400 to 2800 mL/m (0.105 to 0.740 U.S. gpm)
- -3V sensor..... 700 to 4200 mL/m (0.185 to 1.123 U.S. gpm)
- -4V sensor..... 1300 to 6000 mL/m (0.343 to 1.585 U.S. gpm)
- -6V sensor..... 3200 to 12000 mL/m (0.845 to 3.170 U.S. gpm)

Accuracy..... ±2% of reading
Repeatability..... ±0.25% of full range
Viscosity range ..... 0.2 to 20.0 centistokes
Pipe connections ..... G 1/4 in. ports, 1/4 in. NPT (male) pipe adapters (2 included)

Wetted Materials

- Housing..... PVDF
- Flow insert..... PTFE
- Quad ring seal..... FKM
- Rotor ..... PVDF
- Pipe thread adapters..... PVDF
- Suitable for clean fluids only

Electrical
Power ..... 5 to 24 VDC ±10%, regulated,1 0 mA max.
Output Type ..... Open-collector, sinking, 10 mA max.
Cable Length ..... 7.6m (25 ft), can be extended up to 300 m (1000 ft)
Cable type ..... 2-conductor shielded, twisted-pair, 22 AWG

Max. Temperature/Pressure Rating

5.5 bar @ -18 °C (80 psi @ 0 °F)
5.5 bar @ 24 °C (80 psi @ 75 °F)
3 bar @ 120 °C (45 psi @ 248 °F)

Shipping Weight

0.115 kg (0.25 lb)

Standards and Approvals

CE
Manufactured under ISO 9001 for Quality, ISO 14001 for Environmental Management and OHSAS 18001 for Occupational Health and Safety.

China RoHS (Go to www.gfsignet.com for details)
FC This device complies with Part 15 of the FCC rules Operation is subject to the following two conditions:
(1) This device may not cause harmful interference, and,
(2) This device must accept any interference received, including interference that may cause undesired operation.

Temperature/PressureGraphs

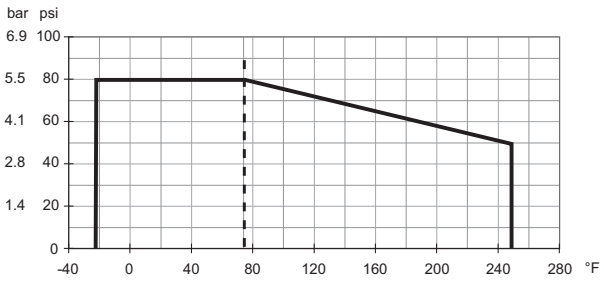

Pressure Drop Across Sensor vs. Flow Rate

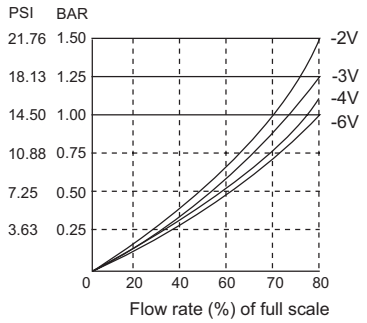

Dimensions

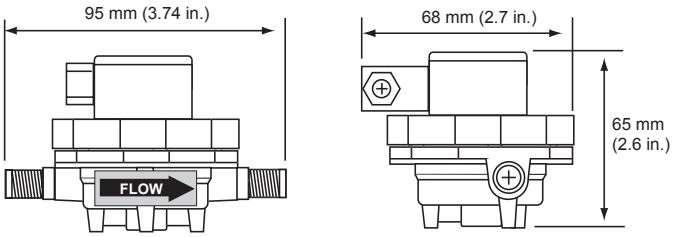

Wiring

Cable Extensions

- 2507 flowmeters distributed in the U.S. include 7.6 m (25 ft) of cable.
- The cable can be extended to 300 m (1000 ft).
- Always maintain cable shield through cable splice.
- 2507 flowmeters distributed in Europe do not include cable. Refer to the sensor plug connection diagram for connection details. (Below)

Sensor Plug Connection Diagram

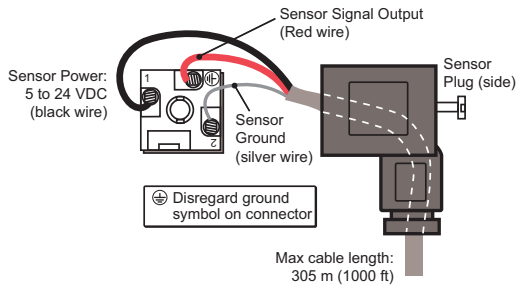

Installation

- The sensor may be installed in any position,although horizontal flow is recommended (the sensor mounted upright). If the sensor is not installed upright, the linearity error may be greater in the lower part of the sensor's measurement range.
- Mounting tabs are provided using M4 or #8 self-tapping screws (customer supplied).

Mounting Tab Hole Pattern

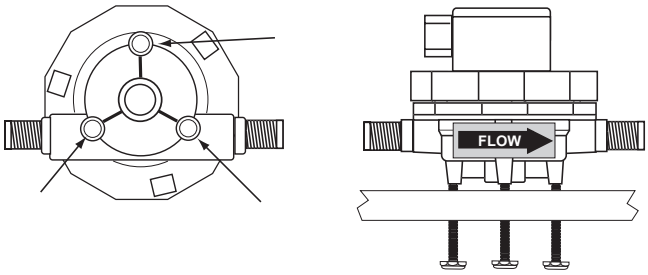

- Install sensor with the arrow pointing in the direction of flow.
- Always maximize distance between the sensor and pump source. Never install immediately downstream of valves, fittings, etc. For optimum performance, a straight flow run of at least 100 mm to 150 mm (4 in. to 6 in.) should be provided before and after the sensor.
- Two pipe fitting adapters (included) convert the G 1/4 in. straight threads to 1/4 in. NPT pipe threads.

Hand tighten only! Apply 1-2 turns of PTFE sealing tape to all threaded connections to prevent leaks.

Installation Tips

- Avoid vibrations and shocks.
- Avoid solids in the fluid.
- Install a filter or line strainer upstream to protect sensor.

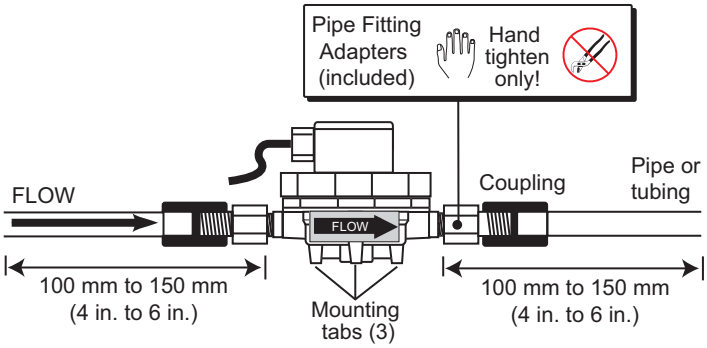

Instrument Connections

Signet 8550

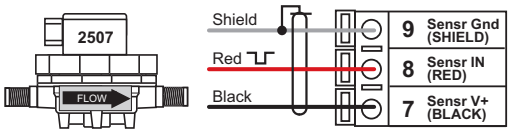

Signet 9900

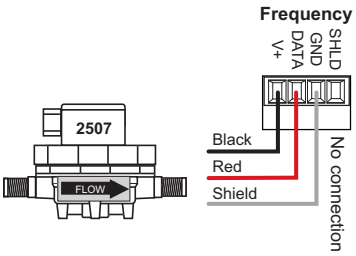

Signet 8900

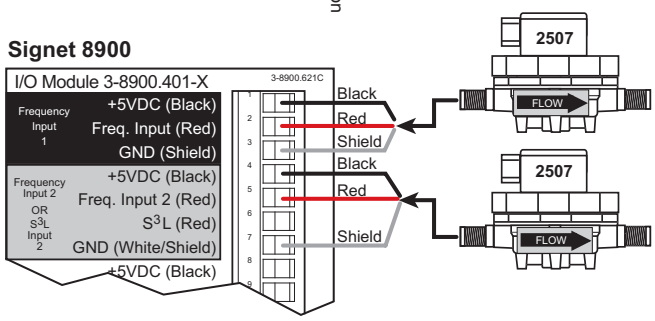

External Power supply

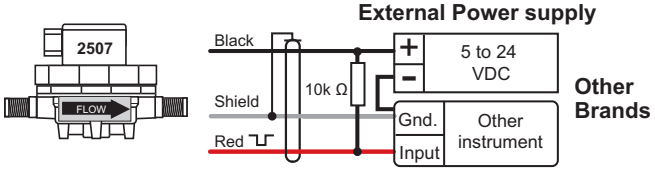

- Pull-up resistor required (10 kΩ recommended). Consult your instrument manual for additional information.

Replacing The Flow Insert

Sensor range can be modified by changing the flow insert. The sensor must be removed from service and disassembled prior to installing the new flow insert. See Specifications (Section 2) for flow range data.

Flow Insert Replacement Procedure:

1. Depressurize system and remove sensor.
2. Rotate the upper sensor body clockwise until it releases from the lower half, then lift off.
3. Remove rotor and quad ring seal from lower body.
4. Push the flow insert outward using a small screwdriver.
5. Install the new flow insert (small diameter inward) with the eraser end of a pencil. Apply light pressure until insert seats against the step in the lower body. **Do not force!**
6. Install rotor into lower body. Spin rotor with finger and check for free rotation. If rotor hits flow insert, remove rotor and push insert back until free rotor rotation is established. Use a rounded object like a pen or pencil body to adjust flow insert depth.
7. Install rotor, quad ring, and upper body. **Hand tighten only!** Do not overtighten upper body or the lower body assembly tabs will break.
8. Reprogram instrument with new K-Factor, see Calibration..



WARNING!
Do not use tools of any kind on the sensor body or port connections. Hand tighten only! Excessive force will damage sensor.

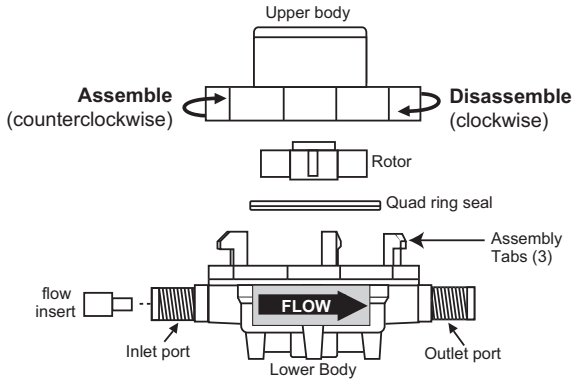

Calibration

The K-Factors listed here represent the number of pulses the sensor will generate for each measured engineering unit. They are listed in Liters and in U.S. gallons for each sensor model.

IMPORTANT!

- K-Factors must be considered as approximate values.
- The number of pulses per volumetric unit may vary depending on the medium and the installation.
- For optimum performance, the system must be calibrated after installation.

Sensor Model	Code	Flow Insert	K-FACTORS	
			Pulses per LITER	Pulses per U.S. Gallon
3-2507.100-1V	198 801 731	1 mm	3413	12918
3-2507.100-2V	198 801 732	2 mm	1687	6385
3-2507.100-3V	198 801 733	3 mm	1045	3955
3-2507.100-4V	198 801 734	4 mm	721	2729
3-2507.100-6V	198 801 736	NONE	382	1446

+GF+

Georg Fischer Signet LLC, 3401 Aerojet Avenue, El Monte, CA 91731-2882 U.S.A. • Tel. (626) 571-2770 • Fax (626) 573-2057
For Worldwide Sales and Service, visit our website: www.gfsignet.com • Or call (in the U.S.): (800) 854-4090
For the most up-to date information, please refer to our website at www.gfsignet.com

3-2507.090 Rev 20 03/19 English

© Georg Fischer Signet LLC 2019