Operating Instructions

High Speed Micro Centrifuge CF0202002



Contents

Safety Instructions	**2**
Installation	**3**
Structure	**4**
Operation Panel	**4**
Rotor Loading	**5**
Cautions	**6**
Operation	**6**
Maintenance	**7**
Trouble Shooting	**8**
Open the door	**8**
Accessory	**9**
Specifications	**9**
Warranty	**10**

Safety Instructions



For your protection

- **Read the operating instructions in full before starting up and follow the safety instructions when in use.**
- Ensure that only trained staff work with the centrifuge.
- Do not operate the device in any manner not described in this user manual. When in doubt or have any trouble, ask for help.
- It's important to be alert for unexpected incidents. Be careful when operating this centrifuge.
- Never use explosive or flammable samples.
- Do not install the centrifuge in or near places where inflammable gases are generated or chemicals are stored.
- Do not place dangerous materials 30cm around the centrifuge.
- Prepare all necessary safety measures before using samples that are toxic, radioactive or contaminated with pathogenic micro-organisms. Use of these is at your own responsibility.
- If the centrifuge, rotor and accessories have been contaminated by solutions with toxic, radioactive or pathogenic materials, clean them per the decontamination procedure specified.
- To avoid electrical shocks, insure hands are dry before handling the power cord when turn on/off the power switch.
- For safety, do not be within 30cm around the centrifuge when it's in operation.
- When the rotor is rotating, never release the door lock.
- Unauthorized repairs, disassembly or modifying the centrifuge are strictly prohibited.
- The centrifuge must be placed on a firm and flat table.
- Make sure the centrifuge is horizontal before running.
- Make sure the angle between the door and the cover is bigger than 70 degrees when the door is open.
- Do not put your fingers or hands between the door and the cover when the door is open.

- Do not move or relocate the centrifuge when running.
- If fluid spills in the rotor chamber, please promptly clean and dry with a dry cloth to avoid sample contamination.
- Make sure to remove any objects and fragments of the tubes dropped inside the rotor chamber before running the centrifuge.
- Be cautious with rotor.
  - Always check corrosion and damages on the rotor surface before using it. Do not use the rotor if an abnormality is found.
  - Do not set the speed beyond the allowable minimum speed of the rotor kits (rotor or adapter). Make sure to run it below the allowable minimum speed.
  - Do not exceed the allowable imbalance.
  - Use the rotor and the tubes within their actual capacities.
  - Make sure the rotor is tightened on the lid

Installation

- Unpack the device carefully and check for any damages which may have arisen during transit. Please contact the manufacturer /supplier for technical support.
- Place the centrifuge on a firm, flat and level platform and make sure it stand firmly.
- Ideal ambient temperature is 20°C ± 5°C. Do not place the centrifuge where the temperature exceeds 30°C.
- To avoid electrical shocks, ensure your hands are dry when touching the power cord.
- Make sure the centrifuge to be grounded properly.

Structure

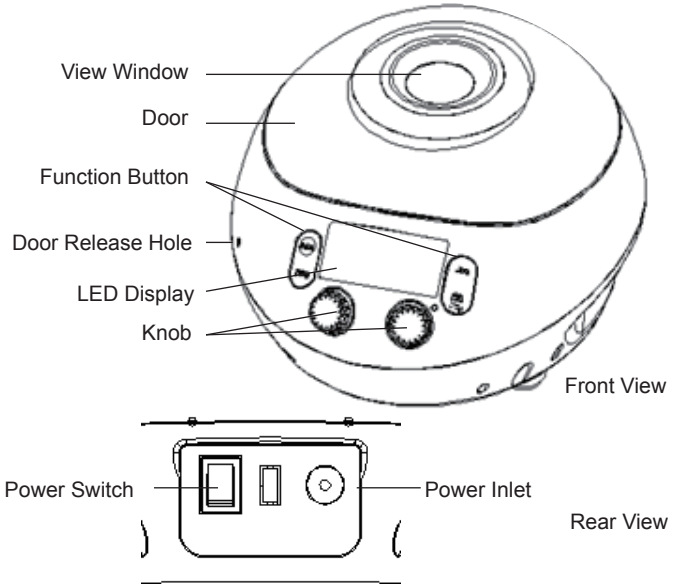

Operation Panel

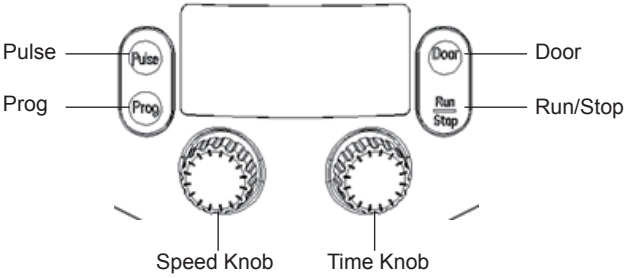

• (Door) Open the door. It cannot work when the unit is running.
• Run/Stop Run and stop the centrifuge
• (Puse) Quick spins. The centrifuge will keep running by pressing the button and stop running by releasing the button. It only works when the unit stops and cannot work when the unit is running.
• (Prog) Select and save the programs. The centrifuge can store up to 10 programs. Select the saved programs by short press and save the new program (speed and time) by long press ≥2S. It only works when the unit stops and cannot work when the unit is running.

Rotor Loading

- Load the supplied rotor onto the shaft and make sure the rotor is in position and connected well with the shaft.
- Hold the rotor with one hand and tighten the nut with the supplied wrench firmly (refer to the below picture)
- Check the rotor is firmly tightened before running.
- Put on the rotor lid

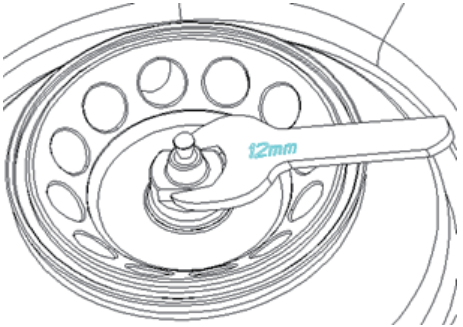

• Close the door and make sure the door is closed completely.
• Symmetrically load centrifuge tubes into the rotor to keep the balance.



Operation

(1) Set the speed RPM/RCF

• Press the speed knob once and the speed value will flash
• The speed range can be set is 500-15000rpm and the increment is 100rpm.
• Rotate the speed knob to set the speed value
• Press the speed knob to confirm the speed value
• Press the speed knob twice, RPM will change to RCF and the RCF value will flash. Rotate and press it to set and confirm the RCF.
• After set the speed without pressing the button for confirmation, the system will stop the value flash and confirm the set value after several seconds.

(2) Set the time

• Press the time knob and the time value will flash
• The time can be set from 30 seconds – 99 minutes
• Rotate the time knob to set the time
• Press the time knob to confirm the time value
• After set the time without pressing the button for confirmation, the system will stop the value flash and confirm the set value after several seconds.

(3) Running

- Press button “Run/Stop” to start running.
- Timer will work as soon as the set speed is reached and the centrifuge displays the remaining run time.
- If an error occurs during the running, the centrifuge will stop automatically and display the error code. The error code can be checked in the Trouble Shooting and the corrective actions can be applied accordingly.

(4) Stop Running

- The centrifuge will stop when the set time is up or by pressing the button “Run/Stop”.
- When running stops, the centrifuge will beep and the door will open automatically.
- If the door is closed, to open it by pressing the button “door”.

Maintenance

- If the centrifuge is exposed to the ultraviolet rays for a long time, the color would probably be changed. It’s better to cover the centrifuge from direct exposure.
- Clean the centrifuge with cloth or sponge moistened with a neutral detergent solution.
- Sterilize the centrifuge with cloth moistened with 70% ethanol solution.
- Do not directly pour water, neutral detergent or disinfectant solution into the rotor chamber, otherwise the liquid would leak into the drive unit and cause corrosion or deterioration to the bearings.
- To prevent corrosion, remove the rotor from the rotor chamber.
- If sample links into the rotor, rinse the rotor with water. Apply a thin coat of silicon grease to the rotor when it’s completely dry.
- Check the rotor every 3 months to make sure the tube and the rotor holes are clean.

Trouble Shooting

The centrifuge has a self-diagnostic function. If a problem occurs, an error/warning code will be displayed on the screen and the operator can determine the malfunction with the warning code below

Cause and Symptom	Proposed Solutions
Error1 Abnormal running without rotor	Load the rotor and restart the machine
Error 2 Hall cable failure	Check if the Hall cable connector is loose.
Error 3 Over heating inside the motor	Power off to cool the machine and re-start at lower speed.
Error 4 Door motor jam or disconnection	Power off and re-install the door motor
Error5 Abnormal vibration	Load the rotor again Load the tubes Symmetrically Tighten the rotor lid firmly
Error 6 Door failure	Power off and power on Use the screw driver into the door release hole

Open the door

(1) If powered on

- The door will open automatically after the running completed.
- Open the door by pressing the button “Door”

(2) If power outage

- The door cannot open automatically if there’s a power outage. It can be opened manually.
- Make sure the running stops completely

• Insert a screw driver into the hole on the top left side of the unit and push forward to open the door.

Accessory

- 1* rotor (1.5mL/2mLx 12)
- 1* rotor locking nut
- 1 * rotor lid
- 1* wrench
- 1* screw driver (to open the door)
- 1* power adapter

Specifications

Items	CF0201002
Maximum Speed (rpm)	15000rpm (500-15000rpm), increment:100rpm
Maximum RCF (g)	15100 x g, increment: 100 x g
Speed Accuracy	±20rpm
Rotor Capacity	0.2ml/0.5ml/1.5ml/2ml×12
Time Range	30sec-99min-HOLD (Continuous Operation)
Driving motor	Brushless DC motor
Safety devices	Door interlock; Over-speed detector; Over-temperature detector; Automatic Internal Diagnosis
Power	Single-phase, AC 100V-240V, 50Hz/60Hz 2.5A
Acceleration/ Braking time [Sec]	30s↑10s↓
Additional features	Speed/RCF switch Short-time run function; sound-alert function
Noise level (dB)	≤56 (5000rpm)
Dimensions [mm]	256 x 225 x 155
Weight [kg]	6

Warranty

The instrument is warranted to be free from defects in materials and workmanship under normal use and service for a period of 24 months from the date of invoice. The warranty is extended only to the original purchaser.

It doesn't cover the below cases,

- Failures caused by incorrect installation
- Failures caused by rough or improper handling
- Failures caused by conveyance or relocation after installation
- Failures caused by unauthorized disassembly or modification
- Failures caused by using non-standard spare parts or accessories and unauthorized modification of the rotor or centrifuge
- Failures caused by natural disasters including fire, earthquake and so on.
- Consumables and parts have a limited guarantee period

For claims under the warranty please contact your local supplier. You may also send the instrument directly to manufacturer, enclosing the invoice copy and giving reasons for the claim.