CHENGDU SEAMATY
TECHNOLOGY Co., Ltd

Address: No.333, Hezuo Road, Hi-Tech Zone,Chengdu, 611731 CN
Tell: +86-28-60232039
Fax: +86-28-69760307
website: www.seamaty.com
Email: sales@seamaty.com

Seamaty

Veterinary Compact Fully Automated Chemistry Analyzer

SMT-120V



CLOSER TO **DIAGNOSIS**
CLOSER TO **COMPANION**

The mission of Seamaty is to make diagnos closer to the patient, not only in the way of point of care, but affordable.
To be closer with internal and external partners is as our company value synonymous with our mission.
The analyzer was originally developed in the previous company where Mr. Peng Ran, the founder of Seamaty, worked at, but it come out nothing after a year trying and this project has been shelved. As the head for this project back to that time, Mr. Ran did not give up and decided to continue it, because he felt the obligation to bring this brand new experience, point of care, to the primary health care in diagnosis. After years development, Seamaty launched this easy to use, quick, accurate and cost-effectivepoint of care chemistry analyzer. Soon we developed veterinary version for our close companions, trying to make a contribution on their health care.

Seamaty is credited as high-tech enterprise and passed ISO 13485:2012 quality management system for medical device manufacturer certified by TUV and our products are CE listed.



Story of Seamaty

Seamaty provides affordable premium diagnosis solution to companion animals

ADVANTAGES

Veterinary Compact Fully Automated Chemistry Analyner

· Accurate Result

With the photoelectric colorimetric principle, SMT-120V analyzer has advantages over dry biochemistry analyzer adapted the light reflection method.
The volume of test sample and dilution is guaranteed by mould,without random error and cross contamination.

· Little Sample Volume Required

Sample volume is only 1/10–1/20 of traditional chemistry analyzer.

· Easy to Carry

0.02m3, 5Kg. The analyzer is designed in portable and space saving, using it anywhere at anytime.

· Less Maintenance

There is no extra consumable needed, such as tube, pump, valve, saving your maintenance expense.



Easy 3-steps Operation

All steps are designed automatically from centrifugation, dilution, quality control to test result printing.

1 **Insert Sample (0.1cc blood)**

Support full blood sample, internal centrifuge, no sample pretreatment, only 0.1 ml full blood, serum or plasma can complete the test.



2 **Insert Rotor (12 minutes running)**

Free of maintenance, easy to use in mobile space and field.Key parts American original import, internal no-liquid road, pump valve and other vulnerable parts.



3 **Read Result (immediately)**

Using the principle of photoelectric colorimetric, no random error, no cross infection.The instrument quality control, calibration automatic real-time completion.



Quick Accurate Diagnosis for Vet

SMT-120V

Veterinary Compact Fully Automated Chemistry Analyzer

1. • New design
2. • Smaller size(0.01m³)
3. • Android operating system
4. • Better user experience
5. • Max. to 25 parameters in single test

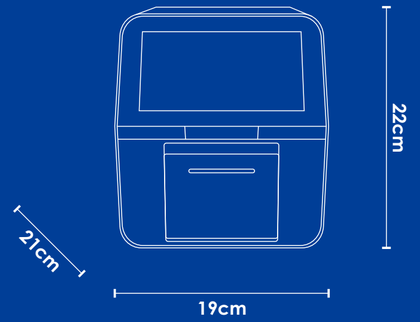

Specifications

Sample type:	Anti-coagulation whole blood, serum, plasma
Sample volume:	90–120ul
Bar code:	Two-dimensional bar code
Testing time:	12minutes/sample
Testing principle:	Absorption spectroscopy, transmission turbidimetry
Testing method:	End point, kinetic, fixed time, turbidmetry etc
Temperature:	37℃ ± 0.2℃
Absorbance:	0–3.0Abs
Resolution:	0.001Abs
QC&Calibrate:	Real time full-auto finish
Work environment:	Temperature:10-32℃ Humidity:< 85%
Light source:	12V/20W, halogen tungsten lamp's life span is over 2500 hours
Power supply:	AC100V-240V, 50-60Hz
Power:	Output: 15v7.0a, 105W MAX
Display:	Android 6.5 inch 800*480, multi-point capacitive touch screen
Storage:	4G, > 100,000 results
Printer:	Built-in thermal printer
Connectors:	2 USB ports
Weight:	4.2 KG, the power adapter is 0.6kg
Order code:	A00120VETEN0



SMT - 120V is a completely new and fully automated animal biochemical analyzer for animal health diagnosis, accurate referenceLaboratory results.

• Single test up to 23 parameters

The single test quantity has been enlarged form previous 14 to present 23 parameters. It's unique

• Better User Experience

Android system with 6.5 inch multi-touch screen, user-friendly interface.Multiplied languages are available

• More Compact and Lighter

The dimension at 19*21*22CM, weight at 4.2Kg

• New Design Appearance

Brand new design, updated plastic to aluminium alloy, more durable

Veterinary Rotor Profile & Order Code

Analyte	Full Name	Conventional Test AW00245	Health Check AW00085	Liver Function AW00087	Kidney Function AW00198	Electrolyte AW00234	Primary Diagnostic AW00468	Pre-operation AW00235
ALB	Albumin	●	●	●	●			
ALP	Alkaline phosphatase	●		●			●	●
ALT	Alanine aminotransferase	●	●	●			●	●
AMY	Amylase	●	●					
AST	Aspartate aminotransferase		●	●				●
Ca	Calcium		●		●	●		
CHE	Cholinesterase	●						
Cl	Chlorine					●		
CK	Creatine Kinase		●					●
CREA	Creatinine	●	●		●		●	●
GLU	Glucose	●	●		●		●	●
GGT	Gamma-glutamyltransferase	●		●				
GLOB*		●	●					
K	Potassium	●				●		
LDH	Lactate dehydrogenase							●
LPS	Lipase							
Mg	Magnesium					●		
Na	Sodium	●				●		
PHOS	Phosphorus		●		●	●		
TBA	Bile Acids			●				
TB	Total Bilirubin	●	●	●				
TC	Total Cholesterol			●				
Co2	Bicarbonate				●	●		
TG	Triglycerides		●					
TP	Total protein	●	●	●			●	●
UA	Uric Acid	●			●			
BUN	Urea nitrogen	●	●		●		●	●
CRP	C-reactive protein							

Disposable Reagent Disc

9 Veterinary Chemistry Profiles with 26 Parameters in One Solution

It is freeze-drying single-use plastic reagent disc panel with one year lifespan at the temperature of 2-8℃.
The diluent contains in the rotor. The QR code not only include the basic information of rotor, but have the functions to update system of analyzer and to set zone code.

The Special Biochemical Reagent Disc

Analyte	Full Name	Canine Inflammation AW00470	Coagulation AW00650
LPS	lipase	●	
CRP	C-Reactive Protein	●	
AMY	Amylase	●	
UREA	Urea nitrogen	●	
CREA	Creatinine	●	
PT	Prothrombin		●
APTT	Actived partial thromboplastin		●
TT	Thrombin		●
FIB	Fibrinogen		●

