Blue-White®

Industries, Ltd.

Variable Area Flow Meters

Engineering and Technical Data

F-452N

2” Pipe Connection

Rod Guided Float

Shield option

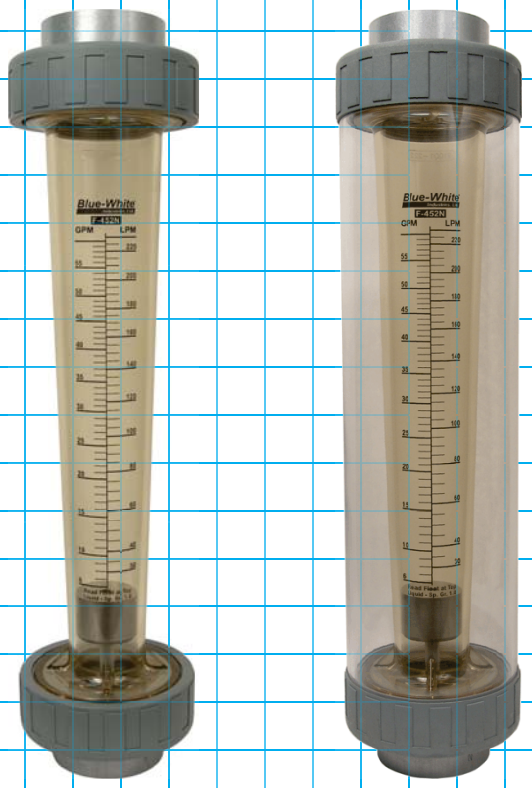

Features:

- **Polysulfone meter body resists high temperatures and pressures.**
- **316SS or Hastelloy rod guided float.**
- **Direct reading permanent scale.**
- **Adapters and unions engineered for increased protection from misalignment and vibration.**
- **Custom calibrations, materials, and Private labeling available.**
- **Very low pressure drop.**
- **Optional polycarbonate splash shield**

Materials of Construction:

Meter Body: .....Polysulfone
Adapters: .....Polysulfone
Guide Rod Holder: .....Polysulfone
O-ring seals: .....Viton® (optional EP)
Union Nuts:.....Fiber reinforced nylon (non wetted)
Float:
Standard Series .....316SS or PTFE (varies per model)
K- Series .....Hastelloy or PTFE (varies per model)
Guide Rod:
Standard Series 316SS
K- Series .....Hastelloy
Optional Shield: .....Polycarbonate

Specifications:

Max. working pressure:.....150 PSI (10.3 bar) @ 70° F (21° C)
Max. fluid temperature: .....200° F (93° C) @ 0 PSI
Full scale accuracy:.....+/- 2%
Calibration fluid: .....water, specific gravity 1.0
Scale length: .....8” (200mm)
Environment:.....Not for direct sunlight exposure.
Maximum pressure drop: .....2 PSI
Approximate shipping wt: ...5 lb. (2.27 kg)

Maximum Temperature vs. Pressure

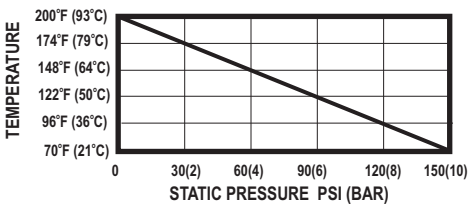

Dimensions:

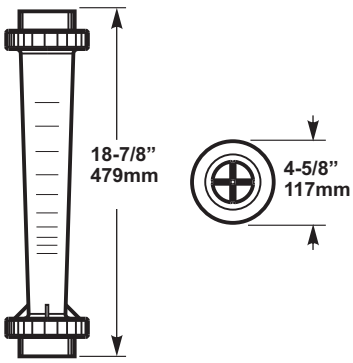

Blue-White® Industries, Ltd.

Variable Area Flow Meters

Installation Requirements:

1. Misalignment will damage the meter!

Flowmeter must be installed in an exact vertical plane to ensure accuracy. Be certain of proper plumbing alignments. Misalignment may cause the o-ring seals to leak. The meterbody material can be damaged by UV rays. **Do not install in direct sunlight.**

2. Pipe dope and glue will damage the meter!

Use only PTFE tape on the threaded adapters. The meter body and plastic fittings cannot tolerate PVC Glue and/or pipe dope. Even fumes can cause severe damage. If you are installing your flowmeter to a glued pipe configuration, install the flowmeter *after* all glued fittings are dried and lines are purged of all fumes. **Never** hold the meter body with pliers or like tools. Union nuts should be hand tightened only. **DO NOT OVER-TIGHTEN!**

3. Vibration and heavy loads will damage the meter!

Wall, floor and ceiling mounts and supports must be carefully aligned with the meter body and sturdy enough to support the plumbing and prevent vibration. Never allow the flowmeter to support the weight of related piping.

4. Solenoid valves will damage the meter!

Avoid a system that will impose a sudden burst of flow to the meter. Such a burst will cause the float to impact the float stop with destructive force. Solenoid valves, or other quick opening valves cannot be used unless meter is protected against sudden bursts of flow.

5. High pressures and temperatures will damage the meter!

The maximum acceptable temperature and pressure is interdependent. The maximum acceptable working pressure is dependant on the actual fluid temperature. The maximum acceptable fluid temperature is dependant on the actual working pressure. (see Temperature Vs. Pressure chart).

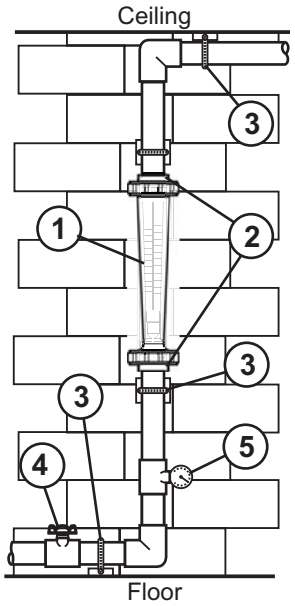

Flow Range and Model Options:

Standard Series - Equipped with 316 SS guide rod

MODEL NUMBER	Dual Scale Range GPM	LPM	Float Material	Guiderod Material
F-452020LHN	2 to 20	8 to 78	PTFE	316 SS
F-452060LHN	6 to 60	30 to 230	316 SS	316 SS
F-452080LHN	8 to 80	40 to 300	316 SS	316 SS
F-452100LHN	6 to 100	20 to 380	316 SS	316 SS
F-452130LHN	20 to 130	80 to 500	316 SS	316 SS
F-452175LHN	25 to 175	100 to 675	316 SS	316 SS

K-Series - Equipped with Hastelloy guide rod

K-Series models are specially equipped for highly corrosive applications.

MODEL NUMBER	Dual Scale Range GPM	LPM	Float Material	Guiderod Material
F-452020LHKN	2 to 20	8 to 78	PTFE	Hastelloy
F-452060LHKN	6 to 60	30 to 230	Hastelloy	Hastelloy
F-452080LHKN	8 to 80	40 to 300	Hastelloy	Hastelloy
F-452100LHKN	6 to 100	20 to 380	Hastelloy	Hastelloy
F-452130LHKN	20 to 130	80 to 500	Hastelloy	Hastelloy
F-452175LHKN	25 to 175	100 to 675	Hastelloy	Hastelloy

Standard Series - Equipped with 316 SS guide rod and Polycarbonate splash shield

MODEL NUMBER	Dual Scale Range GPM	LPM	Float Material	Guiderod Material
F-452020LHNC	2 to 20	8 to 78	PTFE	316 SS
F-452060LHNC	6 to 60	30 to 230	316 SS	316 SS
F-452080LHNC	8 to 80	40 to 300	316 SS	316 SS
F-452100LHNC	6 to 100	20 to 380	316 SS	316 SS
F-452130LHNC	20 to 130	80 to 500	316 SS	316 SS
F-452175LHNC	25 to 175	100 to 675	316 SS	316 SS

K-Series - Equipped with Hastelloy guide rod and Polycarbonate splash shield

K-Series models are specially equipped for highly corrosive applications.

MODEL NUMBER	Dual Scale Range GPM	LPM	Float Material	Guiderod Material
F-452020LHKNC	2 to 20	8 to 78	PTFE	Hastelloy
F-452060LHKNC	6 to 60	30 to 230	Hastelloy	Hastelloy
F-452080LHKNC	8 to 80	40 to 300	Hastelloy	Hastelloy
F-452100LHKNC	6 to 100	20 to 380	Hastelloy	Hastelloy
F-452130LHKNC	20 to 130	80 to 500	Hastelloy	Hastelloy
F-452175LHKNC	25 to 175	100 to 675	Hastelloy	Hastelloy

Note:
Models calibrated with water, Sp.Gr. 1.0. Custom Sp.Gr. calibrations available. Contact the factory.

Blue-White Industries, Ltd.
5300 Business Drive, Huntington Beach, CA 92649
Tel: 714-893-8529 **Fax:** 714-894-9492
www.blue-white.com **Email:** sales@blue-white.com

All trademarks are the property of their respective owners.
Technical data sheet #85000-031 rev.011017