FOUR E'S SCIENTIFIC

Operating Instructions

5 Inch LED Digital Magnetic Hotplate Stirrer

MI0102003



Contents

Safety Instructions	2
Inspection	4
Control	5
Trial run	7
Heating	7
Working with the external temperature sensor	8
Residual heat warning (Hot)	9
Stirring	9
Faults	9
Error codes	10
Maintenance	11
Standards and regulations	11
Specifications	12
Warranty	13

Safety Instructions



For your protection

- **Read the operating instructions in full before starting up and follow the safety instructions when in use.**
- Ensure that only trained staff work with the device.
- Socket must be earthed (protective ground contact).
- **Caution-Magnetism!** Effects of the magnetic field have to be taken in to account (e.g. data storage media, cardiac pacemakers…).
- The heating plate can reach temperatures of 280°C and pay attention to the residual heat after switching off.
- The main power supply cable should not touch the heating plate.
- Wear your personal protective equipment in accordance with the hazard category of the media to be processed. Otherwise there is a risk from:
  - Splashing and evaporation of liquids
  - Ejection of parts
  - Release of toxic or combustible gases
- Set up the device in a spacious area on an even, stable, clean, nonslip, dry and fireproof surface.
- Don't use damaged components.
- Gradually increase the speed and reduce the speed if
  - the medium splashes out of the container because the speed is too high
  - the machine is not running smoothly
  - the container moves on the heating plate

- **Caution!** Only process and heat up any media that has a flash point higher than the adjusted safe temperature limit that has been set.
- The safe temperature limit must always be set to at least 50°C lower than the fire point of the media used.
- Beware of hazards due to:
  - flammable materials
  - combustible media with a low boiling temperature
  - glass breakage
  - incorrect container use
  - overfilling of media
  - unsafe condition of container
- The machine may heat up when in use. Don't use the machine in explosive atmospheres with hazardous substances.
- Process pathogenic materials only in closed containers under a suitable extractor hood.
- Only process media that will not react dangerously to the extra energy produced in other ways, e.g. through light irradiation.
- The external temperature sensor PT1000 must always be inserted in the media when connected and ensure it's inserted in the media to a depth of at least 20mm.
- Accessories must be securely attached to the machine and can't come off by themselves.
- Always disconnect the plug before fitting accessories.
- The machine can only be disconnected from the mains supply by pulling out the mains plug or the connector plug.
- When using PTFE-coated magnetic bars, the following

has to be noted, Chemical reactions of PTFE occur in contact with molten or solute alkali metals and alkaline earth metals, as well as with fine powders of metals in groups 2 and 3 of the periodic system at temperatures above 300°C-400°C. Only elementary fluorine, chlorotrifluoride and alkali metals attack it; halogenated hydrocarbons have a reversible swelling effect.

- The voltage stated on the type plate must correspond to the mains voltage.
- Don't cover the machine, even partially e.g. with metallic plates or film, which will result in overheating.
- Ensure the heating plate is kept clean.
- Protect the machine and accessories from bumps and impacts.
- The minimum distance between the machines; the minimum distance between the machine and the wall is mini. 100mm.

Inspection

- Unpack the device carefully and check for any damages which may have arisen during transit. Please contact the manufacturer/supplier for technical support.



Note:
If there is any apparent damage to the device, please do not connect the power line.

• Contents of package

Items	Qty
Main unit	1
Power cable	1
Screwdriver	1
Magnetic stirring bar	1
External temperature sensor PT1000 (optional accessory)	1
User Manual	1

Control

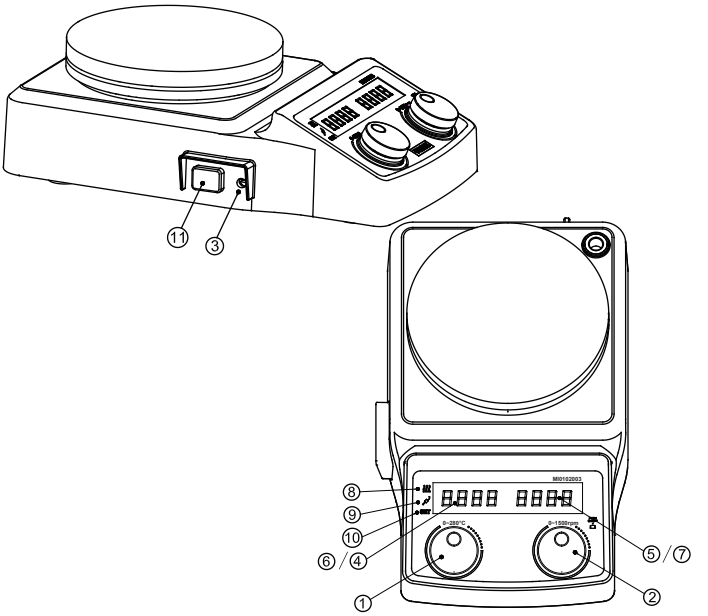

①Knob for temperature setting	Set the temperature by rotating the knob Start/stop heating by pressing the knob
②Knob for speed setting	Set the speed by rotating the knob Start/stop stirring by pressing the knob
③Knob for safety temperature setting	Set the safety temperature by rotating the knob. When the heating temperature is higher than the safety temperature, the machine stops heating.
④Temperature display	When heating, it displays the target temperature and the actual temperature alternately. It displays “OFF” when heating stops.
⑤Speed display	When stirring, it displays the target speed and the actual speed alternately. It displays “OFF” when the stirring stops.
⑥⑦ Safety temperature display	When setting the safety temperature, the first 4 digits display “SAFE” and the last 4 digits display the temperature value.
⑧Heating indicator	It’s lit when heating.
⑨External temperature sensor indicator	When the external temperature sensor is connected, the indicator is lit and the LED displays the temperature of the external temperature sensor. When it’s disconnected, the temperature of the internal temperature sensor is displayed.
⑩Setting indicator	The light will flash when setting the temperature or speed.
⑪Power switch	Switch on/off

Trial run

- Make sure the required voltage corresponds to the mains voltage.
- Ensure the socket must be properly grounded.
- Switch on and start initializing.
- Add sample into the container with an appropriate stirring bar.
- Place the container on the heating plate.
- Set the target speed and start stirring.
- Observe the stirring bar and the LED display.
- Set the temperature and start heating.
- Observe the actual temperature on the LED display.
- Connect the external temperature sensor.

If the above operations are normal, the device is good to run. If these operations are abnormal, the device may probably be damaged during transit, please contact manufacturer/supplier for technical support.



Warning!
DO NOT move the container when the device is working.

Heating

With the digital temperature control, the machine has two separate safe circuits. The hotplate is kept at a constant temperature by a digital control circuit. The hotplate temperature can also be monitored by another adjustable safe circuit. The two temperature sensors (PT1000) internal for temperature control are built into the hotplate.

The single external PT1000 can monitor the temperature of sample.

- Set temperature by the temperature setting knob.
- When heating, the LED will display alternately the target temperature and the real temperature.
- Heating is switched on/off by pressing the temperature setting.
- The set temperature of last operation will be displayed when the machine is switched on. Normally, the set temperature and the actual temperature may probably have some differences:
  - Hotplate center and outer edge
  - The sample inside the container and the container.

To ensure the accuracy of the temperature inside the container, please use the external temperature sensor PT1000.
external PT1000 can monitor the temperature of sample.

Working with the external temperature sensor

The external temperature sensor PT1000 is the optional accessory. When the sensor is connected, the sensor indicator will light and the machine is in the PT1000 operation mode. The setting temperature of the external sensor and the actual temperature are displayed. The safety circuit controls the hotplate temperature.

Comparing with the temperature control of the hotplate, the external temperature sensor can control the sample's temperature more precisely. The external temperature

sensor must be inserted in the sample. For any faults, heating will be automatically stopped. In this case, please proceed as follows:

- Turn power off
- Ensure the external temperature sensor is inserted into the sample
- Turn on and set the temperature to start heating
- If the instrument still can't work properly, please contact manufacturer / supplier for technical support.

Residual heat warning (HOT)

To prevent the risk of burns from the hotplate, this instrument has residual heat warning function. When heating is stopped, and the heating plate temperature is still above 50°C, "Hot" will flash to warn that there's potential risk of burns. When the hotplate temperature drops to below 50°C, the instrument will be automatically powered off. To turn off the instrument immediately, pull out the plug. In case of main power failure or disconnection, the residual heat warning will not work.

Stirring

Stirring is switched on / off by pressing the speed setting knob. The speed is set by rotating the knob in the range of 100-1500rpm. When powered on, it displays the set speed of last operation.

Faults

• The device can't work when powered on
  - Check if the power line is connected properly

- Check if the fuse is broken or loose

• Fault in power on self test
- Power off the device and then restart

• Actual speed can't reach the set value
- Media in high viscosity may probably cause abnormal speed reduction of the motor

• The device can't be powered off when switched off
- Check if the residual heat warning function is still on and the hotplate temperature is above 50°C (LED still works and "Hot" flashes)

Error codes

Error code	Error description Solutions	Solutions
Er1	Short circuit in the external temperature sensor PT1000	Replace PT1000 and re-start the device
Er2	Open circuit in the internal temperature sensor PT1000	Re-start the device
Er3	Short circuit in the internal temperature sensor PT1000	Re-start the device
Er4	Excessive temperature of the device	Power off, and then re-startthe device after cooling down
Er5	Motor failure	Reduce the sample

If the instrument still can't work properly, please contact manufacturer/supplier for technical support.

Maintenance

Proper maintenance can make the device work well and extend its life.

- Do not allow moisture to get into the device when cleaning
- Disconnect the mains plug when cleaning
- Wear protective gloves when cleaning
- Only use the recommended cleansing agents

Dyes	Isopropyl alcohol
Construction materials	Water containing surfactant / Isopropyl alcohol
Cosmetics	Water containing surfactant / Isopropyl alcohol
Foodstuffs	Water containing surfactant
Fuels	Water containing surfactant

Standards and regulations

Construction in accordance with the following safety standards:

EN 61010-1
UL 3101-1
CAN/CSA C22.2(1010-1)
EN 61010-2-10

Construction in accordance with the following EMC standards:

EN 61326-1

Associated EU guidelines:

EMC-guidelines: 89/336/EWG
Instrument guidelines: 73/023/EWG

Specifications

Items	MI0102003
Voltage [VAC]	200-240/100-120
Frequency [Hz]	50/60
Power [W]	630
Stirring point position quantity	1
Max. stirring quantity (H2O) [L]	3
Max. magnetic bar [L x Φ, mm]	55 x 10
Motor Type	DC motor
Max. power input of motor [W]	3
Max. power output of motor [W]	2.5
Speed range [rpm]	100-1500
Speed display	LED
Working plate material	Stainless steel with ceramic coated
Dimension of working plate (mm)	Φ135
Heating power [W]	600
Temperature range [°C]	RT-280
Temperature display [°C]	LED
Temperature display accuracy [°C]	±0.1
Safety temperature [°C]	50-320
External temperature sensor (optional accessory)	PT1000
Control accuracy with the external temperature sensor [°C]	±1
Residual heat warning	50°C
Dimensions [W x D x H, mm]	268x160x86
Weight[kg]	1.8
Permissible ambient temperature [°C]	5-40
Permissible relative humidity	80%
Protection class acc. to DIN EN6 0529	IP42

Warranty

The instrument is warranted to be free from defects in materials and workmanship under normal use and service for a period of 24 months from the date of invoice. The warranty is extended only to the original purchaser. It doesn't cover any worn out parts, nor apply to any damage by improper use, insufficient care or maintenance not carried out in accordance with the instructions in this operating manual.

For claims under the warranty please contact your local supplier. You may also send the instrument directly to manufacturer, enclosing the invoice copy and giving reasons for the claim.