Blue-White® Industries, Ltd.

FLEXFLO® Peristaltic Metering Pumps

Engineering and Technical Data

A-100NVP

Variable Speed

Digital Control

4-20mA, 0-10VDC & Pulse Inputs

Enhanced Tube Failure Detection

Oil and Water Based Polymers



TFD+ Tube Failure Detection

CE c ETL us

Features:

- Peristaltic pump design does not have valves that can clog requiring maintenance.
- Self priming - even against maximum line pressure. By-pass valves are not required. Cannot vapor lock or lose prime.
- Outputs to 5.17 GPH (19.56 LPH).
- Output pressures to 65 PSI (4.5 bar).
- Output volume is not effected by changes in back pressure.
- Patented pump tube design installs easily and stays centered on the rollers without manual adjustment.
- Two pump tubes supplied with each pump. No extra tubing required.
- Accepts 4-20mA, 0-10Vdc, and Pulse inputs for manual or external speed control.
- Operator friendly digital touch pad.
  --Easy to read LCD display
  --Service and Alarm indicator icons.
  --Display motor speed or input signal values.
  --Prime mode for easy priming without changing programming.
- Built-in Tube Failure Detection Plus system (TFD+). Senses chemical in the pump head, shuts off the pump and activates a 1 amp alarm relay (dry contact closure).
- Compatible with Blue-White's output flow verification sensor system.
- Durable housing of chemical resistant Valox (PBT) thermoplastic.

Specifications:

Max. working pressure: .....65 psig (4.5 bar)
Max. fluid temperature: .....130° F (54° C)
Max. ambient temperature: .....14° to 110° F/ -10° to 43° C
Output adjustment range:
14 & 30 RPM with -1T, -2T tubes: .....5-100% (20:1 turndown)
All other models: .....10-100% (10:1 turndown)
Duty cycle:.....Continuous
Maximum viscosity:.....5,000 Centipoise
Maximum suction lift:.....30 ft. Water 0 psig
Maximum Solids:.....50% by volume
Enclosure:.....NEMA 3R, (IP23)

Voltage (amp draw):.....115VAC/60Hz, 1ph (.350 amp max)
230VAC/60Hz, 1ph (.173 amp max)
220VAC/50Hz, 1ph (.175 amp max)
240VAC/50Hz, 1ph (.193 amp max)
Power Cord Plug Type:.....115V60Hz = NEMA 5/15 (USA)
230V60Hz = NEMA 6/15 (USA)
220V50Hz = CEE 7/VII (EUROPE)
240V50Hz = CEE 7/VII (EUROPE)
Approximate shipping wt: ...12 lb. (5.4 kg)

Materials of Construction:

Wetted components:

Pump Tube Assembly:.....Flex-A-Thane®
Suction Tubing:.....Clear PVC
Suction Strainer:.....Natural Polypropylene
Discharge Tubing:.....Natural Polyethylene (LLDPE)
Injection/Check valve:
Body & insert: .....Polypropylene (optional PVDF)
Check Ball: .....Ceramic
Spring: .....Hastelloy C-276
Ball Seat O-ring:.....TFE/P (optional EP)
Static Seal O-ring:.....FKM (optional EP)

Non-Wetted components:

Pump Head & Enclosure: .....Valox® (PBT) thermoplastic
Pump Head Cover:.....Clear Acrylic
Cover Screws:.....300 Stainless, Polypropylene cap
Roller Assembly:
Rotor:.....Valox® (PBT)
Rollers: .....Nylon
Roller Bearings:.....Bronze
Motor Shaft:.....Nickel plated steel
TFD System Sensor pins: ....Hastelloy C-276
Power Cord: .....3 conductor, SJTW-A Water-resistant

Blue-White® Industries, Ltd.

FLEXFLO® Peristaltic Metering Pumps

Dimensions:

Base Mounting

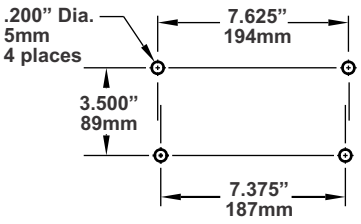

Rear Panel Mounting

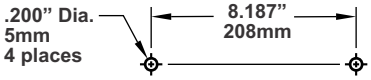

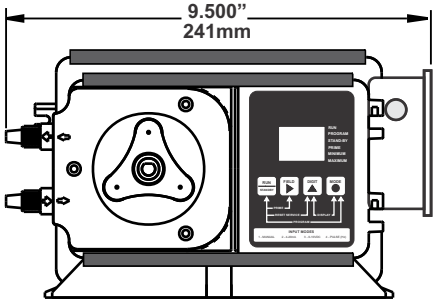

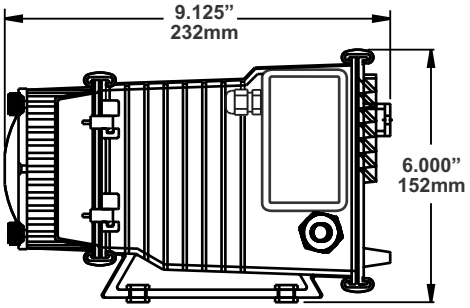

Model Number Matrix:

MODEL A1N ☐ ☐ V - ☐ ☐ - P

Maximum Motor RPM
- **0** = 14 RPM
- **1** = 30 RPM
- **2** = 45 RPM
- **3** = 60 RPM

Power Supply
- **0** = 115V60Hz
- **1** = 220V50Hz
- **2** = 230V60Hz
- **8** = 240V50Hz AS 3112 (Australia/New Zealand)
- 9 = 230V50Hz BS 1363 (UK)

Output Control
- **V** = Digital speed control with external input
- **F** = Analog speed control

Miscellaneous Options (not required)
- **1** = TI40-6V injector replaces A-014N-6A
- **2** = C-340V footvalve replaces C-342-6 strainer
- **5** = A-014NK-6A injector PVDF
- **6** = Jumper set for digital square wave input
- **T7** = 7 gallon chemical tank system
- **T15** = 15 gallon chemical tank system
- **T30** = 30 gallon chemical tank system
- **P** = Polymer Pump equipped with TFD+

Tubing Connection Type
- **T** = Compression tube nuts

Pump Tube Size and Material
- **1** = 1/4" OD Flex-A-Thane®
- **2** = 3/8" OD Flex-A-Thane®
- **3** = 7/16" OD Flex-A-Thane®

Maximum Flow rate and pressure capacities:

Model Number	Feed Rate	RPM	Max PSI (BAR)	Pump Tube Part Number	Pump Tube Material	Nominal Pump Tube OD
A1N0*V-1T-P	0.8 - 15 ML/min	14	65 (4.5)	A1-1T	Flex-A-Thane®	1/4" (6,4mm)
A1N1*V-1T-P	1.8 - 35 ML/min	30	65 (4.5)	A1-1T	Flex-A-Thane®	1/4" (6,4mm)
A1N3*V-1T-P	6.7 - 67 ML/min	60	65 (4.5)	A1-1T	Flex-A-Thane®	1/4" (6,4mm)
A1N3*V-2T-P	14.0 - 140 ML/min	60	65 (4.5)	A1-2T	Flex-A-Thane®	3/8" (9,5mm)
A1N2*V-3T-P	26.1 - 261 ML/min	45	50 (3.5)	A1-3T	Flex-A-Thane®	7/16" (11,1mm)
A1N3*V-3T-P	32.6 - 326 ML/min	60	50 (3.5)	A1-3T	Flex-A-Thane®	7/16" (11,1mm)

Blue-White® Industries, Ltd.
5300 Business Drive, Huntington Beach, CA 92649
Tel: 714-893-8529 **Fax:** 714-894-9492
www.blue-white.com **Email:** sales@blue-white.com

All trademarks are the property of their respective owners.

Technical data sheet #85000-132 rev 0.9 20180809