FLEXFLO®



MODELS
A-100NVP & A-100NFP

Variable Speed
Peristaltic Injector Pump
Operating Manual

Blue-White®
Industries, Ltd.

5300 Business Drive
Huntington Beach, CA 92649
USA
Phone: 714-893-8529 **FAX:** 714-894-9492
E mail: sales@blue-white.com **or** techsupport@blue-white.com
Website: www.blue-white.com

TABLE OF CONTENTS

1 .....**Introduction**.. ....**2**
2 .....**Specifications** **3**
3 .....**Features**..... ....**3**
4 .....**Unpacking**..... ....**3**
5 .....**Installation**.... ....**4**
5.1 ..Mounting location.. ....**4**
5.2 ..Input power connections (A-100NVP).. ....**5**
5.2.1 ..External input/output signal connections (A-100NVP) **6**
5.3 ..Input power connections (A-100NFP)... ....**8**
5.3.1 ..Optional output signal connection (A-100NFP) **10**
5.4 ..How to install the tubing and fittings **12**
6 .....**How to operate the A-100N Polymer Pump** **13**
6.1 ..Description of Pump Output Adj. Controls (A-100NVP)..... ....**13**
6.1.1 ..Mode 1 - Manually Adjusting the output..... ....**14**
6.1.2 ..Mode 2 - 4-20 mA input **15**
6.1.3 ..Mode 3 - 0-10 VDC input. **16**
6.1.4 ..Mode 4 - Frequency/Pulse (Hz) input **18**
6.2 ..How to adjust the output (A-100NFP)... ....**20**
7 .....**Alarms**..... ....**21**
7.1 ..TFD+ - Enhanced Tube Failure Detection system. **21**
7.2 ..FVS - Flow verification System **22**
8 .....**How to maintain the pump** **23**
8.1 ..Routine inspection and cleaning **23**
8.2 ..How to clean and lubricate the Pump **23**
8.3 ..500 hour service warning timer **23**
8.4 ..How to replace the pump tube **24**
Replacement pump tube part numbers **25**
Warranty information **26**

1.0 Introduction

Congratulations on purchasing the A-100N Polymer Peristaltic Metering Pump. The A-100N Polymer Pump is designed to inject polymers and compatible fluid solutions into piping systems. The A-100N Polymer Pump is equipped with external input control circuitry which allows the pumps output to be externally controlled by either a 4-20mA input signal, a 0-10V DC input signal or a pulsed frequency input signal.

2.0 Specifications

Maximum Working Pressure	65 psig / 4.5 bar (most models)
Maximum Fluid Temperature	130° F / 54°C
Ambient Temperature Range	14 to 110°F / -10 to 43°C
Duty Cycle	Continuous
Adjustment Range	
14 & 30 RPM with -1T, -2T tubes	5-100% of speed (20:1 turndown)
All other models	10-100% (10:1 turndown)
Maximum Solids	50% by volume
Maximum Viscosity	5,000 Centipoise
Maximum Suction Lift	up to 30 ft. water
Power Requirements	108/130Vac 60Hz 40 Watts, 208/250Vac 40Hz 40 Watts, 208/250Vac 60Hz 45 Watts
Dimensions	6-1/8" H x 10-1/8" W x 9" D
Weight	
A-100NVP	12 lb. (5.4 kg.)
A-100NFP	8 lb. (3.6 kg.)

3.0 Features

- Peristaltic Pump Tube does not require valves.
- Self priming under maximum pressure. Cannot vapor lock.
- High outlet pressure capability of 100 psig (most models).
- High inlet suction lift capability of 30 feet.
- Enhanced Tube Failure Detection (TFD+) system.
- Patented pump tube assembly design.
- Includes Flow Verification System (FVS) - sensor sold separately.
- 1 amp alarm relay (dry contact).
- Alarm and Service alert icon displays.
- Corrosion proof Valox housing.
- Tamper resistant electronic control panel cover.

4.0 Unpacking

Your pump package should contain the following:
1 - Injector pump with 2 pump tube assemblies
1 - suction tube strainer
1 - ceramic tubing weight
1 - 5' Length of clear PVC suction tubing
1 - 5' Length of opaque LLDPE discharge tubing
1 - Injection fitting with internal back-flow check valve
1 - Mounting hardware kit
1 - Shroud (weather proof cover see page 16)

5.0 Installation

CAUTION: Proper eye and skin protection must be worn when installing and servicing the pump.

Note: *All diagrams are strictly for guideline purposes only. Always consult an expert before installing the pump into specialized systems. The pump should be* ***serviced by qualified persons only.***

5.1 Mounting Location

Choose an area located near the chemical supply tank, chemical injection point and electrical supply. Although the pump is designed to withstand outdoor conditions, a cool, dry, well ventilated location is recommended. Install the pump where it can be easily serviced.

- Mount the pump to a secure surface or wall using the enclosed hardware. Wall mount to a solid surface only. Mounting to drywall with anchors is not recommended.
- Mount the pump close to the injection point. Keep the outlet (discharge) tubing as short as possible. Longer tubing increases the back pressure at the pump tube.
- Your solution tank should be sturdy. Keep the tank covered to reduce fumes. Do not mount the pump directly over your tank. Chemical fumes may damage the unit. Mount the pump off to the side or at a lower level than the chemical container.
- Mounting the pump lower than the chemical container will gravity feed the chemical into the pump. This “flooded suction” installation will reduce output error due to increased suction lift. You must install a shut-off valve, pinch clamp or other means to halt the gravity feed to the pump during servicing.
- Be sure your installation does not constitute a cross connection with the drinking water supply. Check your local plumbing codes.
- Be sure to install a back-flow prevention check valve.
- An anti-syphon valve is not required. syphoning cannot occur.

INJECTOR MOUNTING

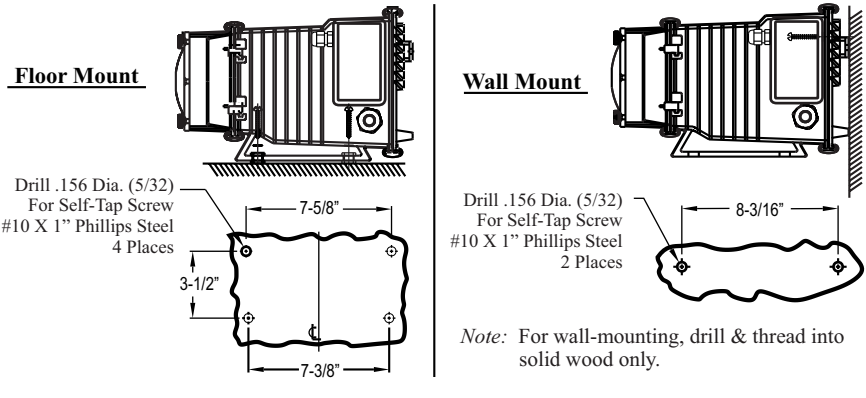

Note: For wall-mounting, drill & thread into solid wood only.

TYPICAL INSTALLATION

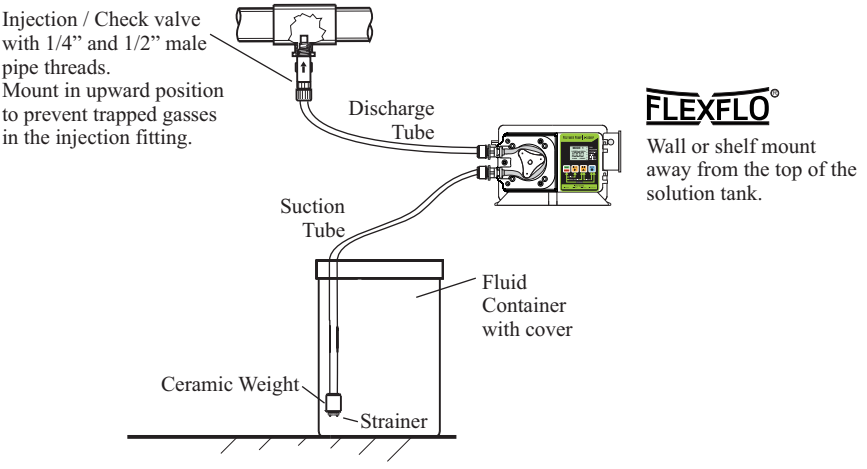

PARTS LOCATOR DRAWING

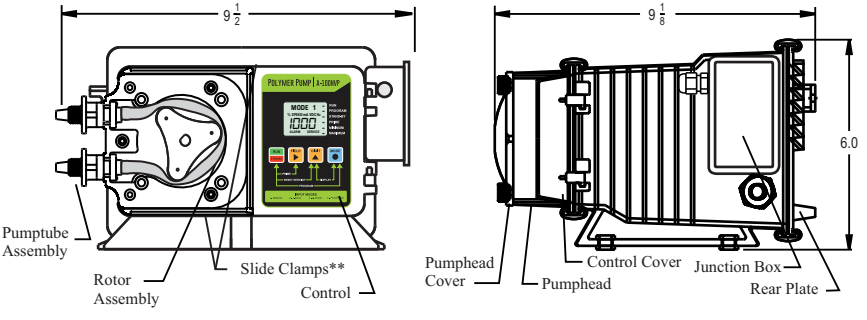

5.2 Input Power Connections (A-100NVP)

WARNING: Risk of electric shock.

- Be certain to connect the pump to the proper supply voltage. Using the incorrect voltage will damage the pump and may result in injury. The voltage requirement is printed on the pump serial label.
- Jumper pins on the circuit board are factory preset for the correct voltage. See page 7 Circuit Board Connections diagram for details.
- The pump is supplied with a ground wire conductor and a grounding type attachment plug (power cord). To reduce the risk of electric shock, be certain that the power cord is connected only to a properly grounded, grounding type receptacle.

  Note: *When in doubt regarding your electrical installation, contact a licensed electrician.*

5.2.1 External Input Signal Connections (A-100NVP)

The pump will accept any one of three different types of external input signals; 4-20 mA , 0-10 VDC, or pulse frequency (500 Hz maximum). The 4-20mA and 0-10 VDC loops must be powered. Two types of frequency inputs, AC sine waves (magnetic coils type outputs) and Digital Square waves (Hall Effect signals, contact closures), are acceptable. A jumper plug located on the circuit board is factory pre-set for AC sine wave signals, the jumper must be re-positioned when digital square wave signals are being used. See page 7, “Hz input jumper settings”

All wiring connections are to be made inside of the junction box located on the side of the pump. A liquid-tite connector is supplied and should be used for the external signal cable. The signal input wires are color coded to the type of signal being used.

SIGNAL INPUT/OUTPUT WIRE COLOR CODES (A-100NVP)

INPUT TYPE	WIRE COLOR CODE
4-20 mA (loop resistance = 250 ohm)	**BLUE (+) (non-powered)** & **BLACK (-)**
0-10 VDC	**ORANGE (+) (non-powered)** & **BLACK (-)**
AC sine wave, TTL, CMOS	**WHITE (+)** & **BLACK (-)**
CONTACT (10v @ 2 mA max) HALL EFFECT, NPN	**RED (+)** & **WHITE (-)**
ALARM RELAY connect 2-conductor plug to either normally open (NO) (factory default) or normally closed (NC) side of receptacle. 1 AMP MAX @ 125VAC (24VDC)	**PURPLE** & **PURPLE**
FLOW VERIFICATION SENSOR	**RED/WHITE** (+ 20VDC) **BLACK (-)** **YELLOW** (signal)
MOTOR ON SIGNAL 6-30V DC open collector output closed while motor is energized	**BROWN (+)** & **BLACK (-)** **pull-up resistor required - see schematic next page**

PADDLEWHEEL SENSOR SIGNAL INPUT WIRING (A-100NVP)

PADDLEWHEEL SENSOR TYPE	PADDLEWHEEL SENSOR WIRE COLOR CODE	PUMP INPUT WIRE COLOR CODE
HALL EFFECT SENSOR	**RED (+)** **BLACK (-)** **BARE (signal)**	**RED (+ 20VDC)** **BLACK (-)** **WHITE (signal)**
AC SINE WAVE SENSOR	**RED (+)** **BLACK (-)**	**WHITE (+)** **BLACK (-)**

OPEN COLLECTOR MOTOR ON OUTPUT SCHEMATICS (A-100NVP)

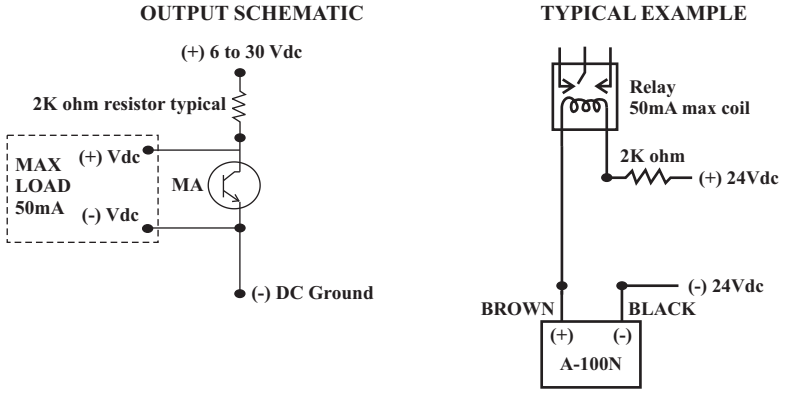

CIRCUIT BOARD CONNECTIONS (A-100NVP)

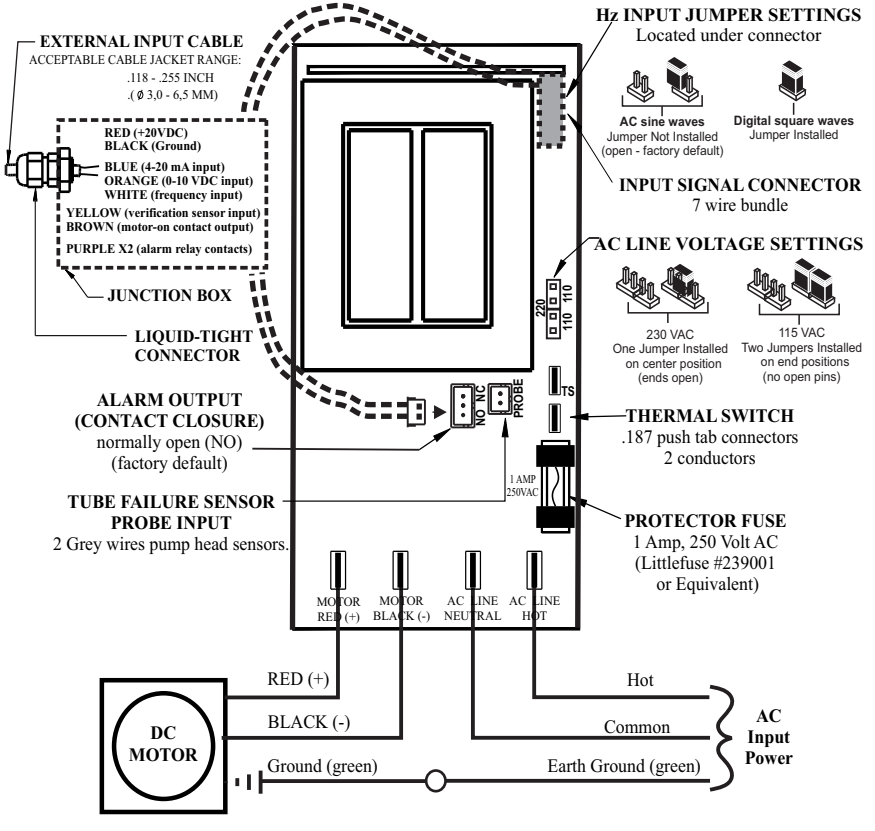

5.3 Input Power Connections (A-100NFP)

WARNING: Risk of electric shock.

Be certain to connect the pump to the proper supply voltage. Using the incorrect voltage will damage the pump and may result in injury. The voltage requirement is printed on the pump serial label.

The pump is supplied with either a ground wire conductor and a grounding type attachment plug (power cord) or a junction box for field wiring.

POWER CORD MODELS -To reduce the risk of electric shock, be certain that the power cord is connected only to a properly grounded, grounding type receptacle.

JUNCTION BOX MODELS -To reduce the risk of electric shock, be certain that a grounding conductor is connected to the green grounding conductor located in the junction box.

Note: *When in doubt regarding your electrical installation, contact a licensed electrician.*

MOTOR LEADWIRES

INPUT VOLTAGE	HOT LEADWIRE	NEUTRAL LEADWIRE	GROUND LEADWIRE
115VAC 60Hz	YELLOW	BLUE	GREEN
220VAC 50Hz	YELLOW	BROWN	GREEN
230VAC 60Hz	YELLOW	RED	GREEN
90VDC	(+) RED	(-) BLACK	GREEN

CIRCUIT BOARD SIGNAL IN/OUT CONNECTIONS

SYSTEM DESCRIPTION	WIRE COLOR CODE
FVS - FLOW VERIFICATION SENSOR INPUT Accepts a pulse signal from an optional sensor confirming that fluid is passing through the pump. Triggers and alarm output if fluid is not detected.	**RED (**+ 20VDC) **BLACK (-)** **YELLOW** (signal)
TFD+ - ENH. TUBE FAILURE DETECTION SYSTEM INPUT Stops the motor and triggers an alarm output if fluid is detected in the pumphead. Triggers an alarm output if is detected.	**GRAY** & **GRAY**
AL - ALARM OPEN COLLECTOR OUTPUT The output (purple wire) sinks to DC ground when an alarm condition exists. 6-30Vdc collector voltage. 50mAdc maximum sinking current.	**PURPLE (+)** & **BLACK (-)**
MA - MOTOR ACTIVE OPEN COLLECTOR OUTPUT The output (brown wire) sinks to DC ground when the motor is de-energized. 6-30Vdc collector voltage. 50mAdc maximum sinking current.	**BROWN (+)** & **BLACK (-)**

WIRING DIAGRAM (A-100NFP)

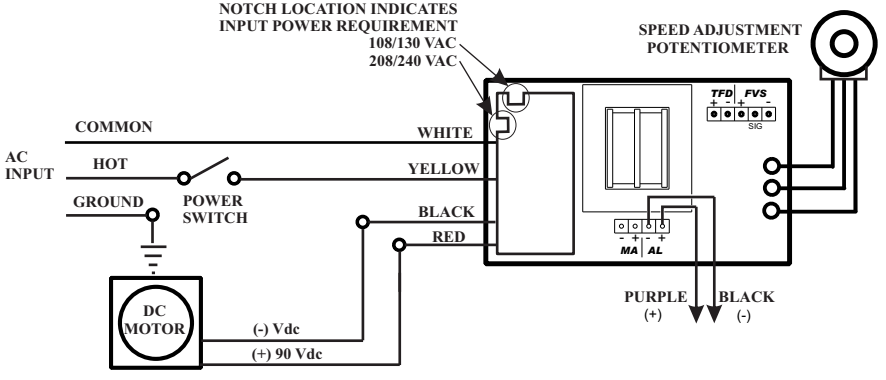

5.3.1 Optional output signal connection (A-100NFP) - The pump includes three optional external signal connections:

- FVS - FLOW VERIFICATION SENSOR INPUT
  Accepts a pulse signal from an optional sensor confirming that fluid is passing through the pump. Triggers and alarm output if fluid is not detected.
- AL - ALARM OPEN COLLECTOR OUTPUT
  The output (purple wire) sinks to DC ground when an alarm condition exists. 6-30Vdc collector voltage. 50mAdc maximum sinking current.
- MA - MOTOR ACTIVE OPEN COLLECTOR OUTPUT
  The output (brown wire) sinks to DC ground when the motor is de-energized. 6-30Vdc collector voltage. 50mAdc maximum sinking current.

All signal wires must be connected to the circuit board, located inside the pump enclosure, using connector plug wiring assemblies. A liquid-tight connector must be installed in the pump enclosure wall and the signal wires passed through the liquid-tight connector and secured. See pages 10 & 11 for wiring details.

1. Remove the rear enclosure panel.
2. Remove knock-out using a screwdriver.
3. Trim edge with a knife and remove sharp edges.
4. Install the provided liquid-tight connector.
5. Connect the connector plug to the circuit board.

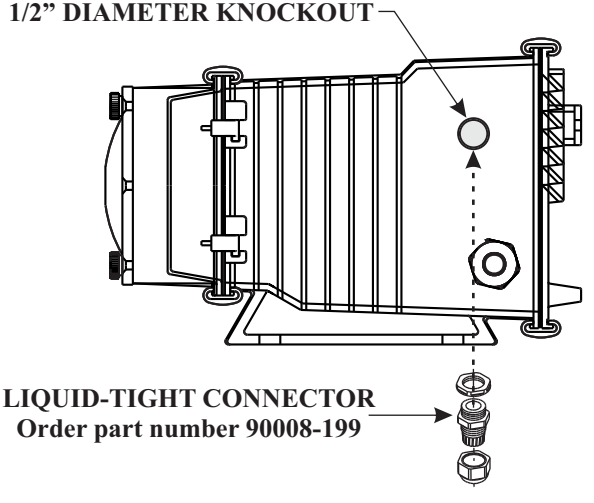

CIRCUIT BOARD SIGNAL CONNECTION (A-100NFP)

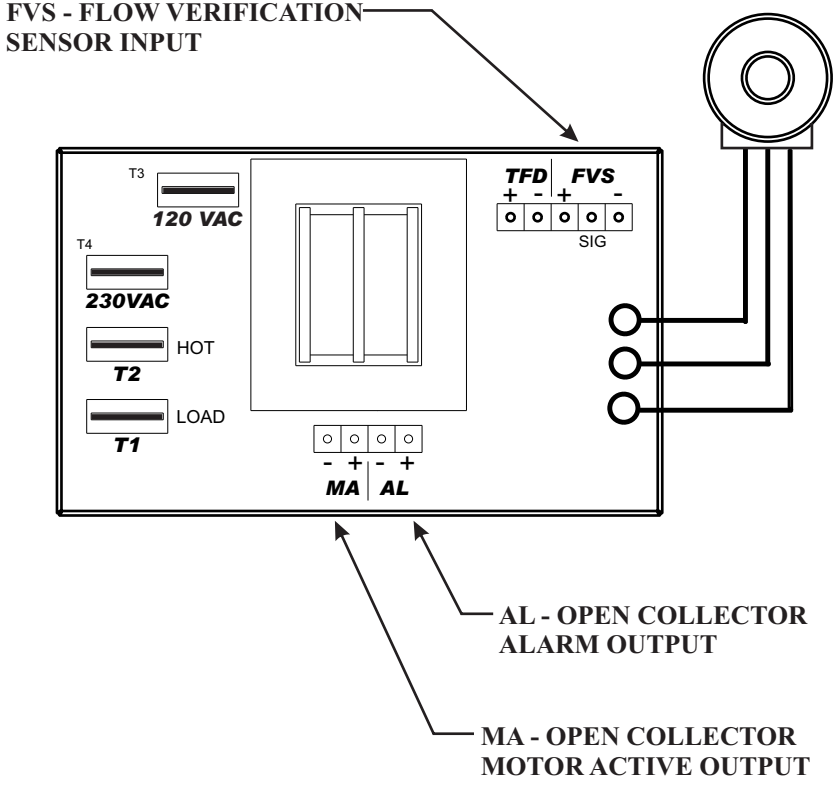

5.4 How To Install the Tubing and Fittings

CAUTION: Proper eye and skin protection must be worn when installing and servicing the pump.

- **Inlet Tubing -** Locate the inlet fitting of the Pump Tube. Remove the tube nut. Push the clear PVC suction tubing onto the compression barb of the fitting. Use the tube nut to secure the tube. Hand tighten only.

- **Strainer** - Trim the inlet end of the suction tubing so that the strainer will rest approximately two inches from the bottom of the solution tank. This will prevent sediment from clogging the strainer. Slip the ceramic weight over the end of the suction tube. Press the strainer into the end of the tube. Secure the ceramic weight to the strainer. Drop the strainer into the solution tank.

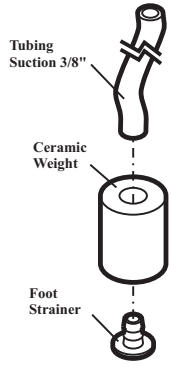

- **Outlet Tubing -** Locate the outlet fitting of the Pump Tube. Remove the tube nut. Push the opaque outlet (discharge) tubing onto the compression barb of the fitting. Use the tube nut to secure the tube. Hand tighten only.

  Keep outlet tube as short as possible.

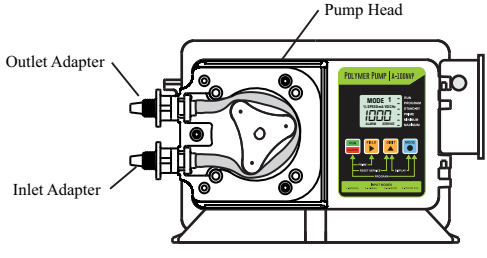

- **Injection/Check Valve Fitting Installation** - The Injection/Check valve fitting is designed to install directly into either 1/4" or 1/2" female pipe threads. This fitting will require periodic cleaning, especially when injecting fluids that calcify such as sodium hypochlorite. See section 7.0. Install the Injection/Check valve directly into the piping system. To prevent trapped gasses, install the fitting in an upward direction. Use PTFE thread sealing tape on the pipe threads.
  Push the opaque outlet (discharge) tubing onto the compression barb of the Injection/Check valve fitting. Use the tube nut to secure the tube. Hand tighten only.

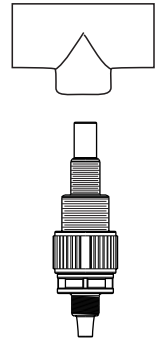

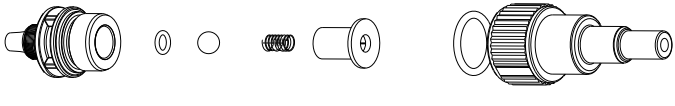

6.0 How To Operate The A-100N

6.1 Description of Pump Output (A-100NVP) Adjustment Controls - Open the control panel door by sliding the upper and lower slide clamps to the left.

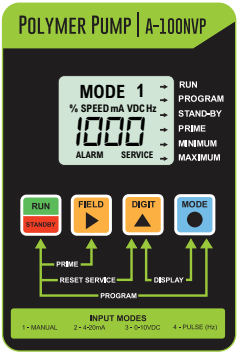

- **RUN/STANDBY** Button -
  - Press to start and stop the pump. The ***ARROW*** next to the word **RUN** will light when in the run mode. The ***ARROW*** next to the word **STAND-BY** will blink when in the stand-by mode.
  - Press to clear ***ALARM.***
  - When pressed with the FIELD Button, initiates a 99 second prime cycle which temporarily overrides the mode setting and runs the pump motor at 100% speed. The ***ARROW*** next to the word **PRIME** will blink.
  - When pressed with the DIGIT button, resets the 500 hour service warning timer to zero.
  - When pressed with the MODE button, initiates the programming mode. The ***ARROW*** next to the word **PROGRAM** will blink.
- **FIELD** Button -
  - In the programming mode, selects the digit to be changed.
  - When pressed with the DIGIT button, initiates the Flow Verification Sensor feature and allows programming the alarm delay from 1-256 seconds.
- **DIGIT** Button -
  - In the programming mode, increases the selected digit.
  - When pressed with the MODE Button, toggles the display from % motor speed to input signal value.
- **MODE** Button -
  - Used to select one of four operating modes.

  Mode 1 - Manual Adjustment (external input disabled)
  Mode 2 - 4-20mA input
  Mode 3 - 0-10VDC input
  Mode 4 - Frequency (Hz) input

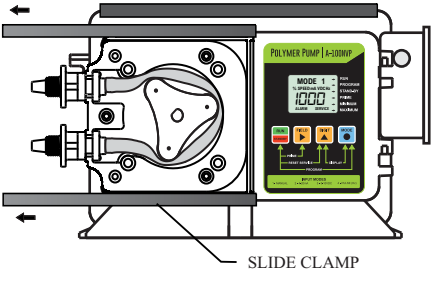

6.1.1 OPERATING MODE 1 - Output adjusted manually -

In this mode, the pump's motor speed is adjusted manually using the front panel touch pad. The motor speed can be adjusted from 5-100%. To adjust the speed:

- ***Set the pump for mode 1.*** Press the MODE button until ***MODE 1*** is shown on the LCD display. The ***%SPEED*** icon will light. The large ***3-DIGIT LCD*** will indicate the currently programmed percentage of speed.
- ***Enter the programming mode.*** At the same time, press the RUN/STANDBY button and the MODE button. A blinking ***ARROW*** will point to the word **PROGRAM** indicating the program mode has been activated.
- Press the FIELD button to select the digit to program. The digit will blink when selected.
- Press the DIGIT button to change the selected digit.
- Repeat until all digits are programmed.
- To exit the programming mode, press the RUN/STANDBY button and the MODE button at the same time. The arrow next to the word **PROGRAM** will disappear.

✓ **NOTE:** If while in the program mode no buttons are pressed within 20 seconds, the circuitry will automatically return to the run mode, without saving changes

RUN MODE 1

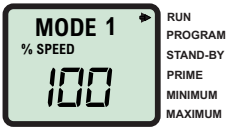

PROGRAM MODE 1
constant speed % setting

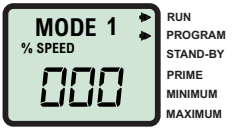

6.1.2 OPERATING MODE 2 - Output adjusted by 4-20 mA input signal -

In this mode, the pump's motor speed is adjusted automatically based on the value of the 4-20 mA input signal. Any motor speed can be assigned to either the minimum or maximum milliamp input values. However, **the programmed minimum mA value must be less than the programmed maximum mA value.** The **ALARM** and **SERVICE** icons will blink if the programming is in error. To assign the minimum and maximum motor speed and the minimum and maximum mA input signal values:

- ***Set the pump for mode 2.*** Press the MODE button until ***MODE 2*** is shown on the LCD display. The ***%SPEED*** or ***mA*** icon will light depending on the current display setting. The large ***3-DIGIT LCD*** will indicate the current motor speed or the current mA

RUN MODE 2

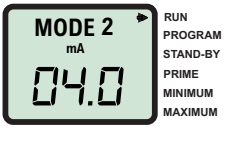

input value.

- ***Enter the programming mode.*** At the same time, press the RUN/STANDBY and MODE buttons. A blinking ***ARROW*** will point to the word **PROGRAM** indicating the program mode is activated. A blinking ***ARROW*** will point to the word **MINIMUM** indicating the minimum value is ready to be programmed. The ***% SPEED*** icon will blink indicating the percentage of speed is ready to be programmed.

PROGRAM MODE 2
% speed at the minimum input

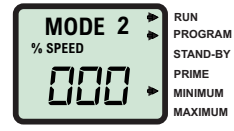

- ***Enter the motor speed at the minimum mA input signal value.*** Press the FIELD button to select the digit to program. The digit will blink when selected.
- Press the DIGIT button to change the selected digit.
- Repeat until all digits are programmed.
- Press the mode button. The ***% SPEED*** icon will stop blinking and the ***mA*** icon will blink indicating the minimum mA value is ready to be programmed. The currently programmed minimum value is shown on the ***3-DIGIT LCD***.

PROGRAM MODE 2
minimum input value

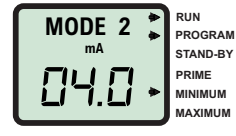

- ***Enter the minimum mA input signal value.*** Note: this value must be less than the maximum mA input signal value. Press the FIELD button to select the digit to program. The digit will blink when selected.
- Press the DIGIT button to change the selected digit.
- Repeat until all digits are programmed.
- Press the mode button. The ***Ma*** icon will stop blinking and the ***% SPEED*** icon will blink. The ***ARROW*** next to the word **MAXIMUM** will blink indicating the maximum value is ready to be programmed. The currently programmed maximum motor speed value is shown on the ***3-DIGIT LCD***.

PROGRAM MODE 2
% speed at the maximum input

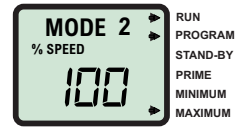

- ***Enter the motor speed at the maximum mA input signal value.*** Press the FIELD button to select the digit to program. The digit will blink when selected.
- Press the DIGIT button to change the selected digit.
- Repeat until all digits are programmed.
- Press the mode button. The ***% SPEED*** icon will stop blinking and the ***mA*** icon will blink indicating the maximum mA value is ready to be programmed. The currently programmed maximum value is shown on the ***3-DIGIT LCD***.

PROGRAM MODE 2
maximum input value

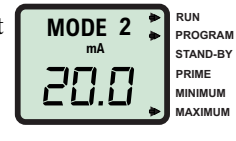

- ***Enter the maximum mA input signal value.*** Note: this value must be greater than the minimum mA input signal value. Press the FIELD button to select the digit to program. The digit will blink when selected..
- Press the DIGIT button to change the selected digit.

- Repeat until all digits are programmed.
- Press the mode button. Programming is complete.
- To exit the programming mode, press the RUN/STANDBY button and the MODE button at the same time. The PROGRAM arrow will disappear.

MODE 2 PROGRAMMING EXAMPLES

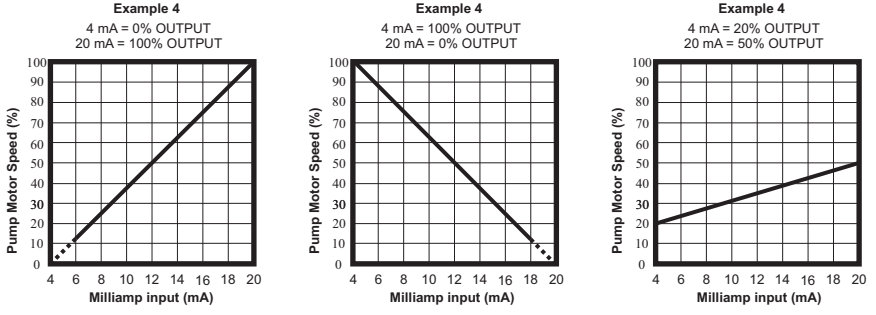

Note: Pump can be set from 0 - 100% motor speed in any input mode; however, actual working range of pump is from 10 - 100% motor speed, therefore motor may not start to rotate below 10% motor speed.

6.1.3 OPERATING MODE 3 - Output adjusted by 0-10VDC input signal -

In this mode, the pump's motor speed is adjusted automatically based on the value of the 0-10VDC input signal. Any motor speed can be assigned to either the minimum or maximum DC input signal values. However, **the programmed minimum VDC value must be less than the programmed maximum VDC value.** The **ALARM** and **SERVICE** icons will blink if the programming is in error. To assign the minimum and maximum motor speed and the minimum and maximum VDC input signal values:

- ***Set the pump for mode 3***. Press the MODE button until ***MODE 3*** is shown on the LCD display. The ***% SPEED*** or ***VDC*** icon will light depending on the current display setting. The large ***3-DIGIT LCD*** will indicate the current motor speed or the VDC input value.
- ***Enter the programming mode.*** At the same time, press the RUN/STANDBY and MODE buttons. A blinking ***ARROW*** will point to the word **PROGRAM** indicating the program mode is activated. A blinking ***ARROW*** will point to the word **MINIMUM** indicating the minimum value is ready to be programmed. The ***% SPEED*** icon will blink indicating the percentage of speed is ready to be programmed.

RUN MODE 3

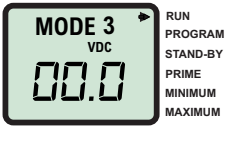

PROGRAM MODE 3
% speed at the minimum input

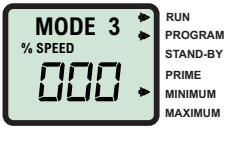

- ***Enter the motor speed at the minimum VDC input signal value.*** Press the FIELD button to select the digit to program. The digit will blink when selected.
- Press the DIGIT button to change the selected digit.
- Repeat until all digits are programmed.
- Press the mode button. The ***% SPEED*** icon will stop blinking and the ***VDC*** icon will blink indicating the minimum VDC value is ready to be programmed. The currently programmed minimum value is shown on the ***3-DIGIT LCD***.
- ***Enter the minimum VDC input signal value.*** Note: this value must be less than the maximum VDC input signal value. Press the FIELD button to select the digit to program. The digit will blink when selected.
- Press the DIGIT button to change the selected digit.
- Repeat until all digits are programmed.
- Press the mode button. The ***VDC*** icon will stop blinking and the ***% SPEED*** icon will blink. The ***ARROW*** next to the word **MAXIMUM** will blink indicating the maximum value is ready to be programmed. The currently programmed maximum motor speed value is shown on the ***3-DIGIT LCD***.
- ***Enter the motor speed at the maximum VDC input signal value.*** Press the FIELD button to select the digit to program. The digit will blink when selected.
- Press the DIGIT button to change the selected digit.
- Repeat until all digits are programmed.
- Press the mode button. The ***% SPEED*** icon will stop blinking and the ***VDC*** icon will blink indicating the maximum VDC value is ready to be programmed. The currently programmed maximum value is shown on the ***3-DIGIT LCD***.
- ***Enter the maximum VDC input signal value.*** Note: this value must be greater than the minimum VDC input signal value. Press the FIELD button to select the digit to program. The digit will blink when selected.
- Press the DIGIT button to change the selected digit.
- Repeat until all digits are programmed.
- Press the mode button. Programming is complete.
- To exit the programming mode, press the RUN/STANDBY button and the MODE button at the same time. The **PROGRAM** arrow will disappear.

PROGRAM MODE 3
minimum input value

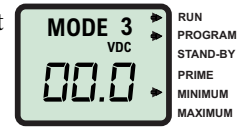

PROGRAM MODE 3
% speed at the maximum input

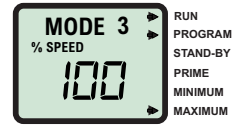

PROGRAM MODE 3
maximum input value

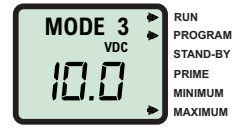

6.1.4 OPERATING MODE 4 - Output adjusted by frequency (Hz) input signal -

In this mode, the pump's motor speed is adjusted automatically based on the frequency (Hz) of the input signal (500 Hz max). Any motor speed can be assigned to either the minimum or maximum Hz input signals. However, **the programmed minimum Hz value must be less than the programmed maximum Hz value.** The **ALARM** and **SERVICE** icons will blink if the programming is in error. To assign the minimum and maximum motor speed and the minimum and maximum Hz input signal values:

RUN MODE 4

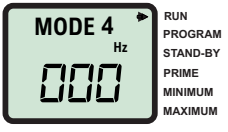

- ***Set the pump for mode 4***. Press the MODE button until ***MODE 4*** is shown on the LCD display. The ***% SPEED*** or ***Hz*** icon will light depending on the current display setting. The large ***3-DIGIT LCD*** will indicate the current motor speed or the Hz input value.
- ***Enter the programming mode.*** At the same time, press the RUN/STANDBY and MODE buttons. A blinking ***ARROW*** will point to the word **PROGRAM** indicating the program mode is activated. A blinking ***ARROW*** will point to the word **MINIMUM** indicating the minimum value is ready to be programmed. The ***% SPEED*** icon will blink indicating the percentage of speed is ready to be programmed.

PROGRAM MODE 4
% speed at the minimum input

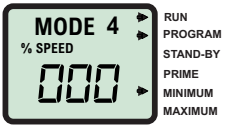

- ***Enter the motor speed at the minimum Hz input signal value.*** Press the FIELD button to select the digit to program. The digit will blink when selected.
- Press the DIGIT button to change the selected digit.
- Repeat until all digits are programmed.
- Press the mode button. The ***% SPEED*** icon will stop blinking and the ***Hz*** icon will blink indicating the minimum Hz value is ready to be programmed. The currently programmed minimum value is shown on the ***3-DIGIT LCD***.

PROGRAM MODE 4
minimum input value

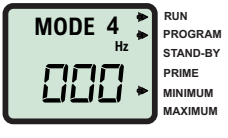

- ***Enter the minimum Hz input signal value (to the nearest 10 Hz).*** Note: this value must be less than the maximum Hz input signal value. Press the FIELD button to select the digit to program. The digit will blink when selected.
- Press the DIGIT button to change the selected digit.
- Repeat until all digits are programmed.
- Press the mode button. The ***Hz*** icon will stop blinking and the ***% SPEED*** icon will blink. The ***ARROW*** next to the word **MAXIMUM** will blink indicating the maximum value is ready to be programmed. The

currently programmed maximum motor speed value is shown on the ***3-DIGIT LCD***.

- ***Enter the motor speed at the maximum Hz input signal value.*** Press the FIELD button to select the digit to program. The digit will blink when selected.
- Press the DIGIT button to change the selected digit.
- Repeat until all digits are programmed.
- Press the mode button. The ***% SPEED*** icon will stop blinking and the ***Hz*** icon will blink indicating the maximum Hz value is ready to be programmed. The currently programmed maximum value is shown on the ***3-DIGIT LCD***.
- ***Enter the maximum Hz input signal value (to the nearest 10 Hz).*** Note: this value must be greater than the minimum Hz input signal value. Press the FIELD button to select the digit to program. The digit will blink when selected.
- Press the DIGIT button to change the selected digit.
- Repeat until all digits are programmed.
- Press the mode button. Programming is complete.
- To exit the programming mode, press the RUN/STANDBY button and the MODE button at the same time. The **PROGRAM** arrow will disappear.

PROGRAM MODE 4
% speed at the maximum input

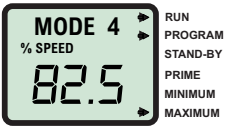

PROGRAM MODE 4
minimum input value

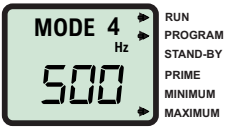

MODE 4 PROGRAMMING EXAMPLES

Example 1
0 Hz = 0% OUTPUT
500 Hz = 100% OUTPUT

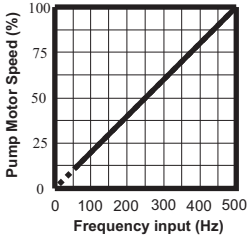

Example 2
0 Hz = 100% OUTPUT
500 Hz = 0% OUTPUT

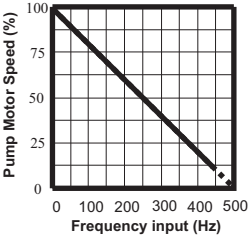

Example 3
0 Hz = 10% OUTPUT
175 Hz = 75% OUTPUT

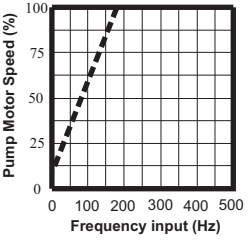

MOTOR SPEED ADJUSTMENT RESOLUTION

$$\text{MOTOR SPEED RESOLUTION} = \frac{10}{\text{MAXIMUM INPUT FREQUENCY}}$$

NOTE: Max Hz > 25 Hz is recommended

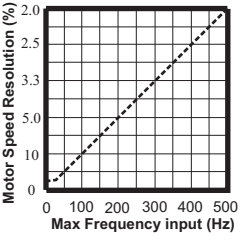

6.2 How to Adjust The Output (A-100NFP)

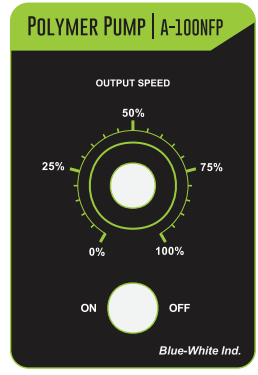

To adjust the pump output -

- The speed of the pumping mechanism is adjustable from 5 % through 100%.

To adjust the pump output -

- Slide the slide clamps to the left only far enough to open the control panel door.
- Turn the adjustment knob to the desired percentage of speed.

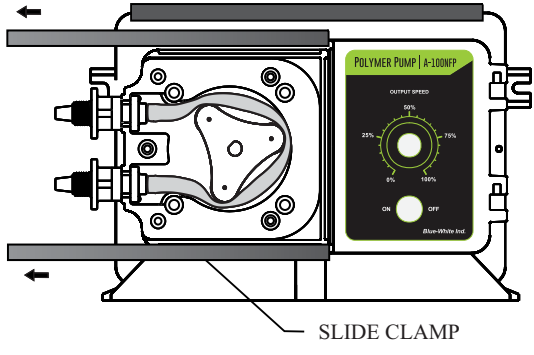

7.0 ALARMS -

7.1 TFD+ - Enhanced Tube Failure Detection system - The A-100N Polymer Pump is equipped with an *Enahnced Tube Failure Detection System* which is designed to stop the pump and provide a contact closure output in the event the pump tube should rupture and fluid enters the pump head. This system is capable of detecting the presence of a large number of chemicals including Oil and Water Based Polymers, and many others. If the system has detected fluid, the pump tube must be replaced and the pump head and roller assembly must be thoroughly cleaned. Press the **RUN/STAND-BY and FIELD** buttons at the same time (prime mode), to remove the pump tube. Thoroughly clean the pump head and roller assembly. Press the **RUN/STAND-BY** button to reset the system.

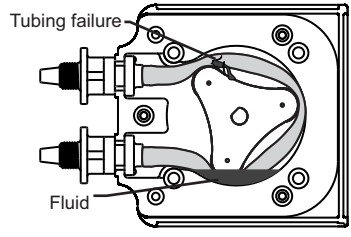

Confirm Fluid Detection - To determine if your fluid solution will be detected by the system, remove the pump tube and roller assembly. Place a small amount of the chemical in the bottom of the pump head - just enough to cover the sensors. Turn on the pump. If the TFD+ system detects the fluid, the pump will stop after a five second confirmation period and the ***ALARM*** icon will light on the display. If the TFD+ system does not detect the chemical, the pump will continue to run after the confirmation period. Carefully clean the fluid out of the pump head being sure to remove all traces of chemical from the sensor probes. Press the **RUN/STAND-BY** button to clear the alarm condition and restart the pump.

Contact Closure Alarm Output - A contact closure output (relay) is provided with the TFD+ system. The relay can be configured for normally open (factory default) or normally closed operation by properly positioning the connector plug on the circuit board (see page 7).

This **Shroud** is designed to weather proof this Peristaltic Pump. If the pump is wall mounted the shroud is not necessary and will still be considered weather proof.

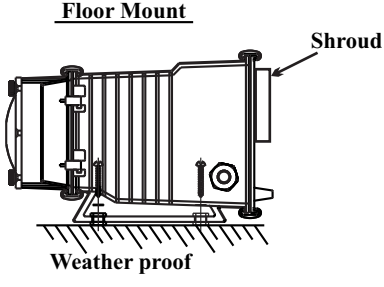

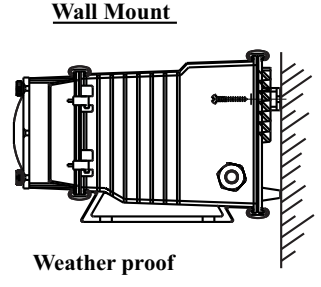

7.2 FVS - Flow Verification System - (sensor sold separately)

The A-100N Polymer Pump is equipped with a *Flow Verification System* which is designed to stop the pump and provide a contact closure output in the event the sensor does not detect chemical during pump operation. This could indicate a clogged injection fitting, empty chemical solution tank, worn pump tube, loose tubing connection, etc.

To allow the pump to clear any gasses that may have accumulated during stopper operation (such as with chlorine), an alarm delay time value from 1-256 seconds must be programmed. Press the FIELD and DIGIT buttons at the same time to enter the delay value. **Note: an alarm delay value of 000 seconds disables the FVS system.**

The pump will stop, and the alarm mode activated, if no pulses are received by the pump and the alarm delay time period has ended. Press the STAND-BY button twice to clear the alarm and restart the pump. The Flow Verification Sensor is sold as an optional accessory.

Confirm the FVS flow range - The Flow Verification Sensor (FVS) will only function within its operating range. Sensor model FV-100-6V has an operating range of 30-300 ml/min (1-10 oz/min). If the pump's output is less than 30 ml/min (0.5 ml/sec), the sensor will not detect chemical and a signal will not be sent to the pump.

SENSOR MODEL NUMBER	OPERATING FLOW RANGE (ml/min)
FV-100-6V	30-300
FV-200-6V	100-1000
FV-300-6V	200-2000
FV-400-6V	300-3000
FV-500-6V	500-5000
FV-600-6V	700-7000

Install the FVS Flow Sensor - The Flow Verification Sensor (FVS) should be installed on the inlet (suction) side of the pump tube. The sensor includes a PVC tubing insert, located inside the sensor's female thread connection, that is designed to seal the sensor onto the pump tube inlet adapter. Thread the sensor onto the pump tube until the tubing insert is snug against the pump tube inlet fitting - do not over-tighten.

Connect the red/white, black, and white wires from the sensor to the red, black, and yellow wires located in the pump's junction box. See page 7.

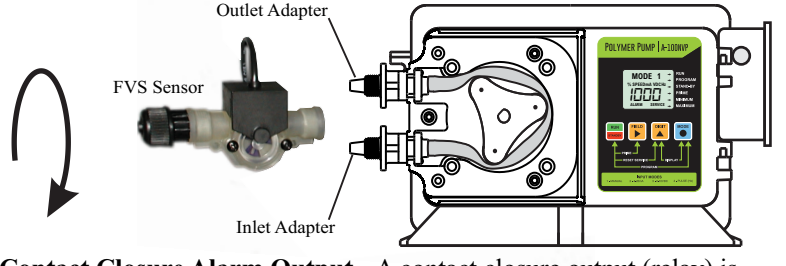

Contact Closure Alarm Output - A contact closure output (relay) is provided with the FVS system. The relay can be configured for normally open (factory default) or normally closed operation by properly positioning the connector plug on the circuit board (see page 7).

8.0 How to Maintain the Pump

CAUTION: Proper eye and skin protection must be worn when installing and servicing the pump.

8.1 Routine Inspection and Maintenance

The pump requires very little maintenance. However, the pump and all accessories should be checked weekly. This is especially important when pumping chemicals. Inspect all components for signs of leaking, swelling, cracking, discoloration or corrosion. Replace worn or damaged components immediately.

Cracking, crazing, discoloration and the like during the first week of operation are signs of severe chemical attack. If this occurs, immediately remove the chemical from the pump. Determine which parts are being attacked and replace them with parts that have been manufactured using more suitable materials. The manufacturer does not assume responsibility for damage to the pump that has been caused by chemical attack.

8.2 How to Clean and Lubricate the Pump

The pump will require occasional cleaning and lubricating. The amount will depend on the severity of service.

- When changing the pump tube assembly, the pump head chamber, roller assembly and pump head cover should be wiped free of any dirt and debris.
- The pump head cover bearing may require grease periodically. Apply a small amount of grease (Aeroshell aviation grease #5 or equivalent) when necessary.
- Although not necessary, 100% silicon lubrication may be used on the roller assembly and tube assembly.
- Periodically clean the injection/check valve assembly, especially when injecting fluids that calcify such as sodium hypochlorite. These lime deposits and other build ups can clog the fitting, increase the back pressure and interfere with the check valve operation.
- Periodically clean the suction strainer.
- Periodically inspect the air vents located under the motor compartment and on the rear panel. Clean if necessary.

8.3 500 Hour Service Warning Timer

The A-100N Polymer Pump is equipped with a tube life warning timer. After approximately 500 hours of accumulated running time, the **SERVICE** icon will light. This is a reminder that the pump tube is nearing its minimum life expectancy and should be replaced. *Your actual tube life will depend on many factors such as the chemical used, back pressure, temperature, viscosity, and motor RPM.*

8.4 How to Replace the Pump Tube

The pump tube assembly will eventually break if not replaced. The tube has been designed for a minimum service life of 500 hours. However, the life of the tube is affected by many factors such as the type of chemical being pumped, the amount of back pressure, the motor RPM, temperature and others. The pump tube assembly must be inspected and replaced regularly.

Remove the Old Pump Tube - The pump roller assembly spins in a counter clockwise direction. The pump head inlet (suction) side is located at the bottom of the pump and the outlet (discharge) is located at the top of the pump head.

- Release any pressure that may be in the discharge tubing.
- Disconnect the suction and discharge tubes from the pump tube.
- Remove the pump head cover.
- With the pump running, pull the inlet fitting out of the pumphead. Guide the tube counter clockwise away from the rollers. Pull the outlet fitting out of the pump head.

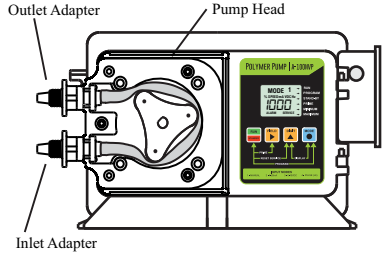

Install the New Pump Tube - Be sure the pump head chamber is clean and free of any debris.

Remove and inspect the roller assembly. Be sure the rollers spin freely. If required, apply a small amount of grease to the pump head cover bearing.

- With the pump running, insert the inlet (suction) side of the Pump Tube fitting into the pump head.
- **Carefully** guide the Pump Tube into the pump head. Stretch the tube slightly and insert the outlet (discharge) fitting into the upper retaining slot in the pump head.
- Place the clear cover on the pump head and secure with three screws.

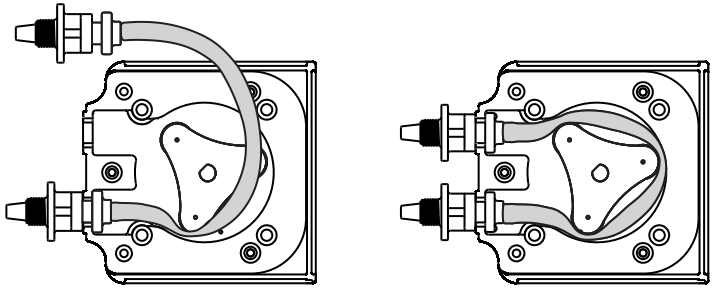

REPLACEMENT PUMP TUBE AND ROLLER ASSEMBLY PART NUMBERS

Model Number	Pump Tube Part Number	Roller Assembly Part Number
A1N0*V-1T-P	A1-1T	A-100N-7
A1N1*V-1T-P	A1-1T	A-100N-7
A1N3*V-1T-P	A1-1T	A-100N-7
A1N3*V-2T-P	A1-2T	A-100N-7
A1N2*V-3T-P	A1-3T	A-100N-7
A1N3*V-3T-P	A1-3T	A-100N-7

Model Number	Pump Tube Part Number	Roller Assembly Part Number
A1N0*F-1T-P	A1-1T	A-100N-7
A1N1*F-1T-P	A1-1T	A-100N-7
A1N3*F-1T-P	A1-1T	A-100N-7
A1N3*F-2T-P	A1-2T	A-100N-7
A1N2*F-3T-P	A1-3T	A-100N-7
A1N3*F-3T-P	A1-3T	A-100N-7

LIMITED WARRANTY

Your new pump is a quality product and is warranted to be free of defects as set down in this policy. All parts, including rubberized goods, and labor are covered under warranty for 90 days from the date of purchase. Used peristaltic pump tube assemblies are not warranted. Parts, excluding rubberized goods, are covered under warranty for 12 months from the date of purchase.
Warranty coverage does not include damage to the pump that results from misuse, carelessness, abuse or alteration. Only the repair or the replacement of the pump is covered. Blue-White Industries does not assume responsibility for any other loss or damage.
Warranty status is determined by the pump's serial label and the sales invoice or receipt. The serial label must be on the pump and the pump must be accompanied by the sales invoice or receipt to obtain warranty coverage. The warranty status of the pump will be verified by Blue-White or a factory authorized service center.

Please be advised that although safety tested by independent testing laboratories, Caution - This Pump Has Been Evaluated For Use With Water Only. ***Installers and operators of these devices must be well informed and aware of the precautions to be taken when injecting various fluids -especially those considered hazardous or dangerous.***
Should it become necessary to return an injector for repair or service, you must attach information regarding the chemical used as some residue may be present within the unit which could be a hazard to service personnel.
Blue-White Industries will not be liable for any damage that may result by the use of chemicals with their injectors and it's components. Thank you.

PROCEDURE FOR IN WARRANTY REPAIR

Carefully pack the pump to be repaired. To assist in troubleshooting, please include the foot strainer and injection/check valve fitting if possible. Enclose a brief description of the problem as well as the original invoice or sales receipt showing the date of purchase. The receipt will be returned with the unit. Prepay all shipping costs. COD shipments will not be accepted. Warranty service must be performed by the factory or an authorized service center. Damage caused by improper packaging is the responsibility of the sender.



Users of electrical and electronic equipment (EEE) with the WEEE marking per Annex IV of the WEEE Directive must not dispose of end of life EEE as unsorted municipal waste, but use the collection framework available to them for the return, recycle, recovery of WEEE and minimize any potential effects of EEE on the environment and human health due to the presence of hazardous substances. The WEEE marking applies only to countries within the European Union (EU) and Norway. Appliances are labeled in accordance with European Directive 2002/96/EC.
Contact your local waste recovery agency for a *Designated Collection Facility* in your area.

AUTHORIZED SERVICE CENTERS

To find an authorized service center near you, please call Blue-White Industries at (714) 893-8529 or e-mail us at sales@blue-white.com

Blue-White®
Industries, Ltd.

5300 Business Drive
Huntington Beach, CA 92649
USA
Phone: 714-893-8529 **FAX:** 714-894-9492
E mail: sales@blue-white.com **or** techsupport@blue-white.com
Website: www.blue-white.com

 # 80000-587 **Rev 1 20190911**