Blue-White® Industries, Ltd.

FLEXFLO® Peristaltic Metering Pumps

Engineering and Technical Data

A-100NFP

Variable Speed

Dial Knob Control

Enhanced Tube Failure Detection

Oil and Water Based Polymers



TFD+ Tube Failure Detection

CE

C ETL US LISTED

Features:

- **Peristaltic pump design does not have valves that can clog requiring maintenance.**
- **Self priming - even against maximum line pressure. By-pass valves are not required. Cannot vapor lock or lose prime.**
- **Outputs to 5.17 GPH (19.56 LPH).**
- **Output pressures to 65 PSI (4.5 bar).**
- **Output volume is not effected by changes in back pressure.**
- **Patented pump tube design installs easily and stays centered on the rollers without manual adjustment.**
- **Two pump tubes supplied with each pump. No extra tubing required.**
- **Easy to use dial knob speed adjustment.**
- **Built-in Tube Failure Detection Plus system (TFD+). Senses chemical in the pump head, shuts off the pump and activates an NPN open collector output.**
- **Compatible with Blue-White's output flow verification sensor system.**
- **Durable housing of chemical resistant Valox (PBT) thermoplastic.**

Specifications:

Max. working pressure: .....65 psig (4.5 bar)
Max. fluid temperature: .....130° F (54° C)
Max. ambient temperature: ..14° to 110° F/ -10° to 43° C
Output adjustment range: ....10-100% in 1% increments
Duty cycle:.....Continuous
Maximum viscosity:.....5,000 Centipoise
Maximum suction lift: .....30 ft. Water 0 psig
Maximum Solids: .....50% by volume
Enclosure: .....NEMA 3R, (IP23)

Voltage (amp draw): .....115VAC/60Hz, 1ph (.513 amp max)
230VAC/60Hz, 1ph (.563 amp max)
220VAC/50Hz, 1ph (.660 amp max)
240VAC/50Hz, 1ph (.585 amp max)
Power Cord Plug Type:.....115V60Hz = NEMA 5/15 (USA)
230V60Hz = NEMA 6/15 (USA)
220V50Hz = CEE 7/VII (EUROPE)
240V50Hz = CEE 7/VII (EUROPE)
Approximate shipping wt: ...12 lb. (5.4 kg)

Materials of Construction:

Wetted components:

Pump Tube Assembly:.....Flex-A-Thane®
Suction Tubing:.....Clear PVC
Suction Strainer:.....Natural Polypropylene
Discharge Tubing:.....Natural Polyethylene (LLDPE)
Injection/Check valve:
Body & insert: .....Polypropylene (optional PVDF)
Check Ball: .....Ceramic
Spring: .....Hastelloy C-276
Ball Seat O-ring:.....TFE/P (optional EP)
Static Seal O-ring:.....FKM (optional EP)

Non-Wetted components:

Pump Head & Enclosure: .....Valox® (PBT) thermoplastic
Pump Head Cover:.....Clear Acrylic
Cover Screws:.....300 Stainless, Polypropylene cap
Roller Assembly:
Rotor:.....Valox® (PBT)
Rollers: .....Nylon
Roller Bearings: .....Bronze
Motor Shaft:.....Nickel plated steel
TFD System Sensor pins: ....Hastelloy C-276
Power Cord: .....3 conductor, SJTW-A Water-resistant

Blue-White® Industries, Ltd.

FLEXFLO® Peristaltic Metering Pumps

Dimensions:

Base Mounting

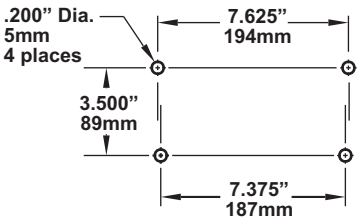

Rear Panel Mounting

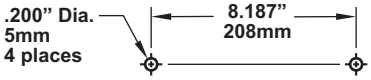

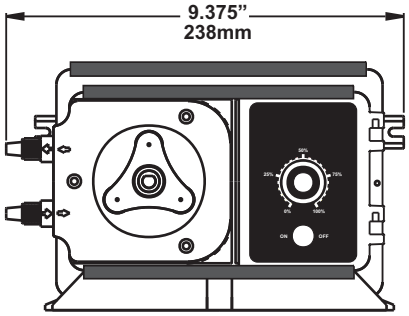

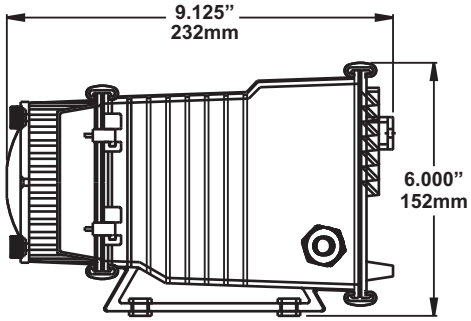

Model Number Matrix:

MODEL A1N ☐ ☐ F - ☐ ☐ - P

Maximum Motor RPM
- **0** = 14 RPM
- **1** = 30 RPM
- **2** = 45 RPM
- **3** = 60 RPM

Power Supply
- **0** = 115V60Hz
- **1** = 220V50Hz
- **2** = 230V60Hz
- **8** = 240V50Hz AS 3112 (Australia/New Zealand)
- **9** = 230V50Hz BS 1363 (UK)

Output Control
- **V** = Digital speed control with external input
- **F** = Analog speed control

Miscellaneous Options (not required)
- **1** = TI40-6V injector replaces A-014N-6A
- **2** = C-340V footvalve replaces C-342-6 strainer
- **5** = A-014NK-6A injector PVDF
- **6** = Jumper set for digital square wave input
- **T7** = 7 gallon chemical tank system
- **T15** = 15 gallon chemical tank system
- **T30** = 30 gallon chemical tank system
- **P** = Polymer Pump equipped with TFD+

Tubing Connection Type
- **T** = Compression tube nuts

Pump Tube Size and Material
- **1** = 1/4" OD Flex-A-Thane®
- **2** = 3/8" OD Flex-A-Thane®
- **3** = 7/16" OD Flex-A-Thane®

Maximum Flow rate and pressure capacities:

Model Number	Feed Rate	RPM	Max PSI (BAR)	Pump Tube Part Number	Pump Tube Material	Nominal Pump Tube OD
A1N0*F-1T-P	1.5 - 15 ML/min	14	65 (4.5)	A1-1T	Flex-A-Thane®	1/4" (6,4mm)
A1N1*F-1T-P	3.5 - 35 ML/min	30	65 (4.5)	A1-1T	Flex-A-Thane®	1/4" (6,4mm)
A1N3*F-1T-P	6.7 - 67 ML/min	60	65 (4.5)	A1-1T	Flex-A-Thane®	1/4" (6,4mm)
A1N3*F-2T-P	14.0 - 140 ML/min	60	65 (4.5)	A1-2T	Flex-A-Thane®	3/8" (9,5mm)
A1N2*F-3T-P	26.1 - 261 ML/min	45	50 (3.5)	A1-3T	Flex-A-Thane®	7/16" (11,1mm)
A1N3*F-3T-P	32.6 - 326 ML/min	60	50 (3.5)	A1-3T	Flex-A-Thane®	7/16" (11,1mm)

Blue-White® Industries, Ltd.
5300 Business Drive, Huntington Beach, CA 92649
Tel: 714-893-8529 **Fax:** 714-894-9492
www.blue-white.com **Email:** sales@blue-white.com