FLEXFLO®



MODEL A-100N

Peristaltic Injector Pump
Operating Manual

Models A-100NA, A-100NC, A-100NS, A-100NF, A-100NX

Blue-White®
Industries, Ltd.

5300 Business Drive
Huntington Beach, CA 92649
USA
Phone: 714-893-8529 **FAX:** 714-894-9492
E mail: sales@blue-white.com **or** techsupport@blue-white.com
Website: www.blue-white.com

TABLE OF CONTENTS

1.....**Introduction**.....3
2.....**Specifications**.....3
3.....**Features**.....3
4.....**Unpacking**.....4
5.....**Installation**.....4
5.1..Mounting location.....4
5.2..Optional circuit board signal connection installation.....6
5.3..Input power connections.....8
5.4..How to install the tubing and fittings.....10
6.....**How to adjust the output**.....11
6.1..Fixed cycle timer models.....11
6.2..Variable speed model.....11
6.3..TFD - Tube Failures Detection system.....12
6.4..FVS - Flow verification System.....12
7.....**How to maintain the Pump**.....14
7.1..Routine inspection and cleaning.....14
7.2..How to clean and lubricate the Pump.....14
7.3..How to replace the pump tube.....15
Replacement parts drawing.....16
Replacement parts list.....17
Warranty information.....18

1.0 Introduction

Congratulations on purchasing the A-100N Peristaltic Metering Pump. The A-100N is designed to inject chemicals into piping systems. The pump has been tested by NSF International for use with 12 ½% Sodium Hypochlorite. This manual covers the following feed rate adjustment mechanisms:

1. Fixed Cycle Timer - (Models A-100NA, A-100NC, A-100NS) The fixed speed pumping mechanism is turned on and off by an electronic timer. The *total* cycle time is factory set. The *on-time* cycle is adjustable from 5% through 100% of the total cycle time. Model A-100NA has a 1 minute cycle with a 60 second adjustable on-time. Model A-100NC has a 5 second cycle with a 5 second adjustable on-time. Model A-100NS (ideal for spa and hot tub chlorination) has a 1 minute cycle with a 6 second adjustable on-time. (Custom cycles are available from the factory).

2. Variable Speed Controller - (Model A-100NF) The speed of the pumping mechanism is adjustable from 5% through 100%.

3. Fixed Feed Rate - (Model A-100NX) No adjustment control.

2.0 Specifications

Maximum Working Pressure	100 psig / 6.9 bar (most models)
Maximum Fluid Temperature	130° F / 54° C
Ambient Temperature Range	14 to 110° F / -10 to 43° C
Duty Cycle	Continuous
Maximum Solids	50% by volume
Maximum Viscosity	5,000 Centipoise
Maximum Suction Lift	up to 30 ft. water
Power Requirements	108/130Vac 60Hz 80 Watts,
208/250Vac 50Hz 40 Watts,	208/250Vac 60Hz 45 Watts
Dimensions	6-1/8" H x 10-1/8" W x 9" D
Weight	8 lb.

3.0 Features

- Peristaltic Pump Tube does not require valves.
- Self priming under maximum pressure. Cannot vapor lock.
- High outlet pressure capability of 100 psig (most models).
- High inlet suction lift capability of 30 feet.
- Patented Tube Failure Detection (TFD) system.
- Patented pump tube assembly design.
- Includes Flow Verification System (FVS) - sensor sold separately.
- Open collector (sinking 50mA max) alarm output. (30V DC max)
- Corrosion proof Valox housing.

4.0 Unpacking

Your pump package should contain the following:
1 - Injector pump with 2 pump tube assemblies
1 - suction tube strainer
1 - ceramic tubing weight
1 - 5' Length of clear PVC suction tubing
1 - 5' Length of opaque LLDPE discharge tubing
1 - Injection fitting with internal back-flow check valve
1 - Mounting hardware kit
1- Shroud (Weather proof cover see page 6)

5.0 Installation

CAUTION: Proper eye and skin protection must be worn when installing and servicing the pump.

Note: *All diagrams are strictly for guideline purposes only. Always consult an expert before installing the pump into specialized systems. The pump should be* ***serviced by qualified persons only.***

5.1 Mounting Location

Choose an area located near the chemical supply tank, chemical injection point and electrical supply. Although the pump is designed to withstand outdoor conditions, a cool, dry, well ventilated location is recommended. Install the pump where it can be easily serviced.

- Mount the pump to a secure surface or wall using the enclosed hardware. Wall mount to a solid surface only. Mounting to drywall with anchors is not recommended.
- Mount the pump close to the injection point. Keep the outlet (discharge) tubing as short as possible. Longer tubing increases the back pressure at the pump tube.
- Your solution tank should be sturdy. Keep the tank covered to reduce fumes. Do not mount the pump directly over your tank. Chemical fumes may damage the unit. Mount the pump off to the side or at a lower level than the chemical container.
- Mounting the pump lower than the chemical container will gravity feed the chemical into the pump. This "flooded suction" installation will reduce output error due to increased suction lift. You must install a shut-off valve, pinch clamp or other means to halt the gravity feed to the pump during servicing.
- Be sure your installation does not constitute a cross connection with the drinking water supply. Check your local plumbing codes.
- Be sure to install a back-flow prevention check valve.
- An anti-syphon valve is not required. syphoning cannot occur.

INJECTOR MOUNTING

Floor Mount

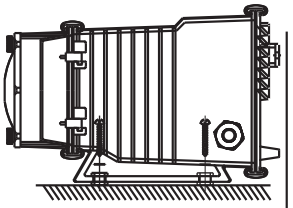

Drill .156 Dia. (5/32)
For Self-Tap Screw
#10 X 1" Phillips Steel
4 Places

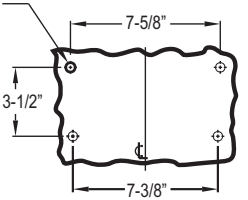

Wall Mount

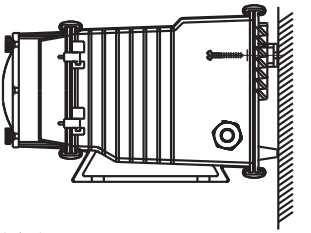

Drill .156 Dia. (5/32)
For Self-Tap Screw
#10 X 1" Phillips Steel
2 Places

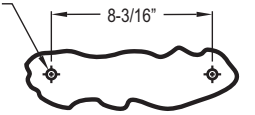

Note: For wall-mounting, drill & thread into solid wood only.

TYPICAL INSTALLATION

Injection / Check valve with 1/4" and 1/2" male pipe threads.
Mount in upward position to prevent trapped gasses in the injection fitting.

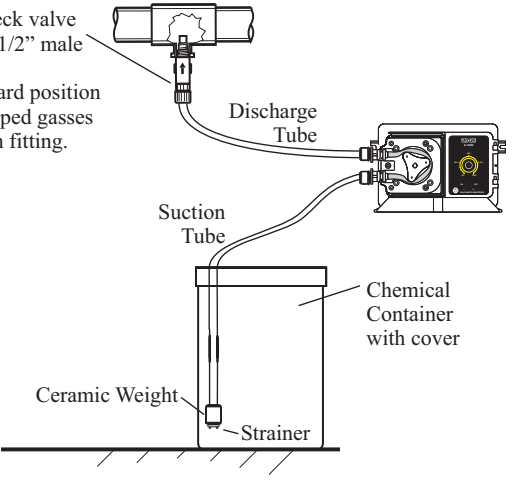

FLEXFLO®

Wall or shelf mount away from the top of the solution tank. Chemical fumes can damage the unit.

PARTS LOCATOR DRAWING

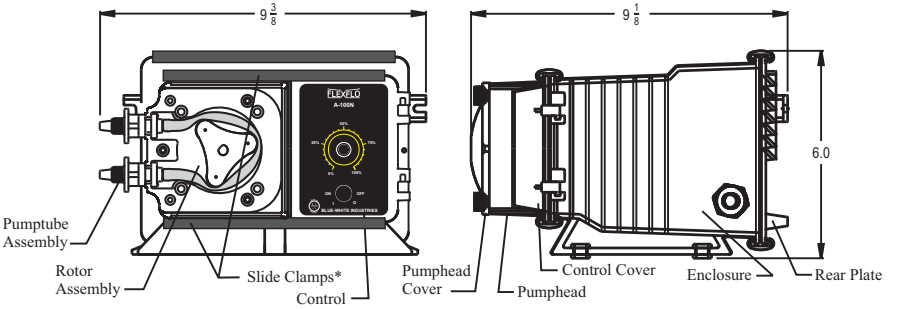

* Slide both top & bottom clamps to the left only far enough to open the control cover.

This **Shroud** is designed to weather proof this Peristaltic Pump. If the pump is wall mounted the shroud is not necessary and will still be considered weather proof.

Floor Mount

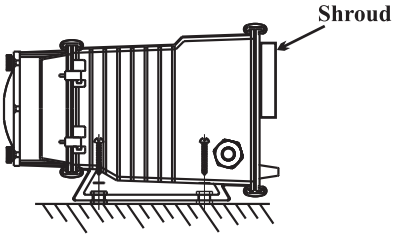

Weather proof

Wall Mount

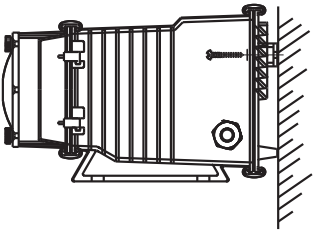

Weather proof

5.2 Optional circuit board signal connection installation - The pump includes three optional external signal connections:

` FVS - FLOW VERIFICATION SENSOR INPUT
Accepts a pulse signal from an optional Blue-White sensor confirming that fluid is passing through the pump. Triggers the AL alarm output if fluid is not detected.

` AL - ALARM OPEN COLLECTOR OUTPUT
The output (purple wire) sinks to DC ground when an alarm condition exists. 6-30Vdc collector voltage. 50mAdc maximum sinking current.

` MA - MOTOR ACTIVE OPEN COLLECTOR OUTPUT
The output (brown wire) sinks to DC ground when the motor is de-energized. 6-30Vdc collector voltage. 50mAdc maximum sinking current.

All signal wires must be connected to the circuit board, located inside the pump enclosure, using connector plug wiring assemblies. A liquid-tight connector must be installed in the pump enclosure wall and the signal wires passed through the liquid-tight connector and secured. See pages 8 & 9 for wiring details.

1. Remove the rear enclosure panel.
2. Remove knock-out using a screwdriver.
3. Trim edge with a knife and remove sharp edges.
4. Install the provided liquid-tight connector.
5. Connect the connector plug to the circuit board.

1/2" DIAMETER KNOCKOUT

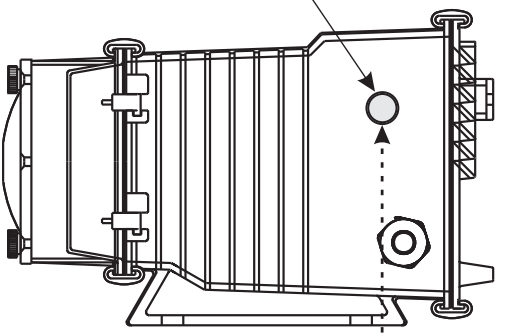

LIQUID-TIGHT CONNECTOR
Order part number 90008-199



CIRCUIT BOARD SIGNAL CONNECTIONS

FVS - FLOW VERIFICATION SENSOR INPUT
order part number 90010-261
3-wire connector plug wire assembly

MA - OPEN COLLECTOR MOTOR ACTIVE OUTPUT
AL - OPEN COLLECTOR ALARM OUTPUT
order part number 90010-258
4-wire connector plug wire assembly

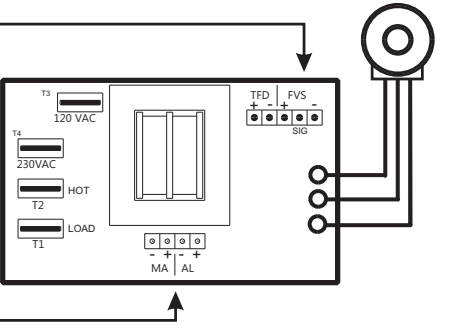

OPEN COLLECTOR OUTPUT SCHEMATICS

OUTPUT SCHEMATIC

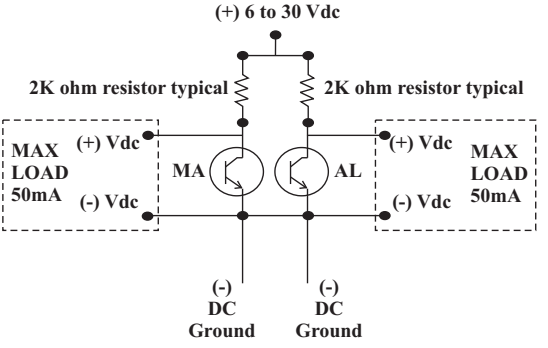

TYPICAL EXAMPLE

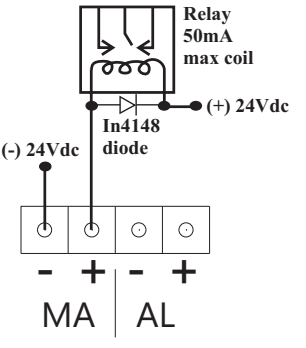

5.3 Input Power Connections

WARNING: Risk of electric shock.

Be certain to connect the pump to the proper supply voltage. Using the incorrect voltage will damage the pump and may result in injury. The voltage requirement is printed on the pump serial label.

The pump is supplied with either a ground wire conductor and a grounding type attachment plug (power cord) or a junction box for field wiring.

POWER CORD MODELS -To reduce the risk of electric shock, be certain that the power cord is connected only to a properly grounded, grounding type receptacle.

JUNCTION BOX MODELS -To reduce the risk of electric shock, be certain that a grounding conductor is connected to the green grounding conductor located in the junction box.

Note: *When in doubt regarding your electrical installation, contact a licensed electrician.*

MOTOR LEADWIRES

INPUT VOLTAGE	HOT LEADWIRE	NEUTRAL LEADWIRE	GROUND LEADWIRE
115VAC 60Hz	YELLOW	BLUE	GREEN
220VAC 50Hz	YELLOW	BROWN	GREEN
230VAC 60Hz	YELLOW	RED	GREEN
90VDC	(+) RED	(-) BLACK	GREEN

CIRCUIT BOARD SIGNAL IN/OUT CONNECTIONS

SYSTEM DESCRIPTION	WIRE COLOR CODE
FVS - FLOW VERIFICATION SENSOR INPUT Accepts a pulse signal from an optional Blue-White sensor confirming that fluid is passing through the pump. Triggers and alarm output if fluid is not detected.	**RED** (+ 20VDC) **BLACK (-)** **YELLOW** (signal)
TFD - TUBE FAILURE DETECTION SYSTEM INPUT Monitors a pair of sensors in the pumphead. Triggers an alarm output if fluid with a conductivity of greater than 500 micro-seimens is detected. Typical chemicals include chlorine, acid, caustic. The system will not detect water or silicone lubricating oil.	**GRAY** & **GRAY**
AL - ALARM OPEN COLLECTOR OUTPUT The output (purple wire) sinks to DC ground when an alarm condition exists. 6-30Vdc collector voltage. 50mAdc maximum sinking current.	**PURPLE (+)** & **BLACK (-)**
MA - MOTOR ACTIVE OPEN COLLECTOR OUTPUT The output (brown wire) sinks to DC ground when the motor is de-energized. 6-30Vdc collector voltage. 50mAdc maximum sinking current.	**BROWN (+)** & **BLACK (-)**

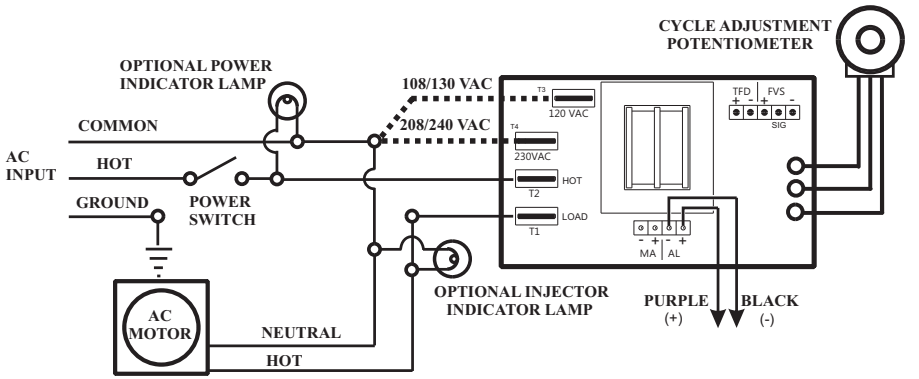

WIRING DIAGRAM - Model A-100NA & A-100NC

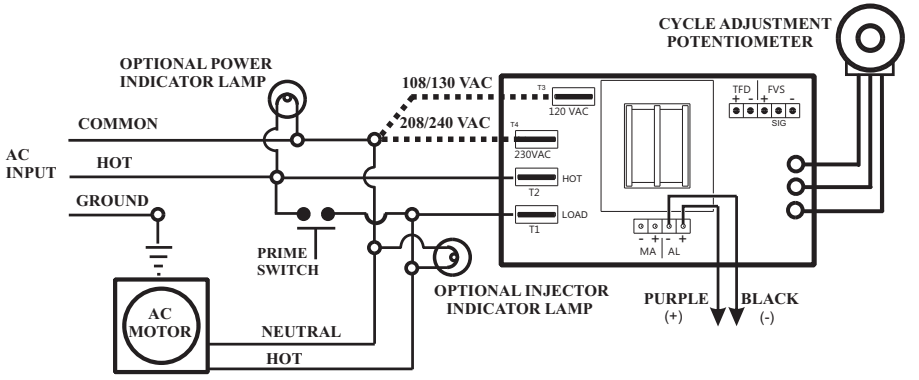

WIRING DIAGRAM - Model A-100NS

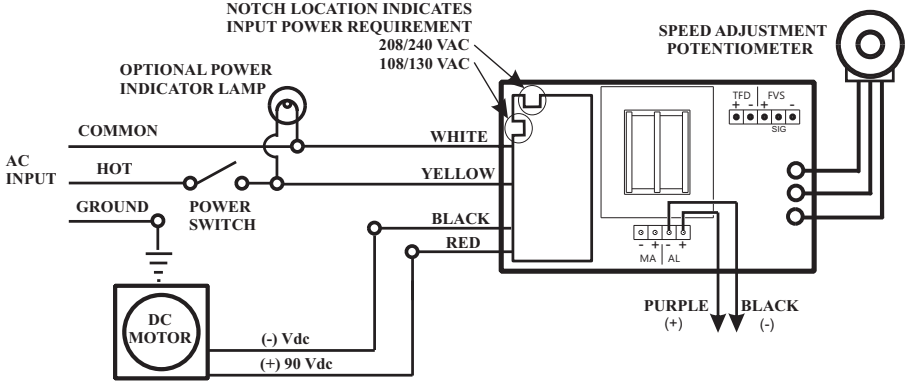

WIRING DIAGRAM - Model A-100NF

5.4 How To Install the Tubing and Fittings

CAUTION: Proper eye and skin protection must be worn when installing and servicing the pump.

- **Inlet Tubing -** Locate the inlet fitting of the Pump Tube. Remove the tube nut. Push the clear PVC suction tubing onto the compression barb of the fitting. Use the tube nut to secure the tube. Hand tighten only.
- **Strainer** - Trim the inlet end of the suction tubing so that the strainer will rest approximately two inches from the bottom of the solution tank. This will prevent sediment from clogging the strainer. Slip the ceramic weight over the end of the suction tube. Press the strainer into the end of the tube. Secure the ceramic weight to the strainer. Drop the strainer into the solution tank.

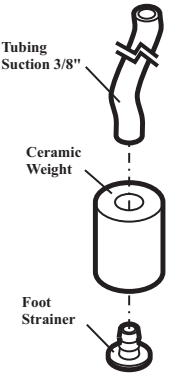

- **Outlet Tubing -** Locate the outlet fitting of the Pump Tube. Remove the tube nut. Push the opaque outlet (discharge) tubing onto the compression barb of the fitting. Use the tube nut to secure the tube. Hand tighten only.

Keep outlet tube as short as possible.

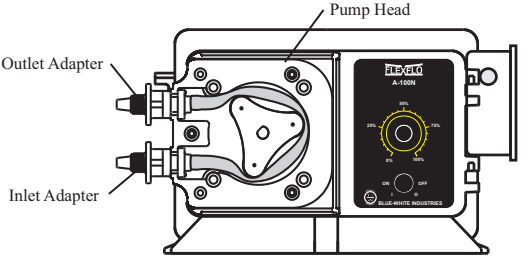

- **Injection/Check Valve Fitting Installation** - The Injection/Check valve fitting is designed to install directly into either 1/4" or 1/2" female pipe threads. This fitting will require periodic cleaning, especially when injecting fluids that calcify such as sodium hypochlorite. See section 7.0. Install the Injection/Check valve directly into the piping system. To prevent trapped gasses, install the fitting in an upward direction. Use PTFE thread sealing tape on the pipe threads.
Push the opaque outlet (discharge) tubing onto the compression barb of the Injection/Check valve fitting. Use the tube nut to secure the tube. Hand tighten only.

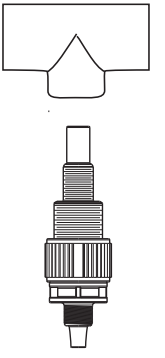

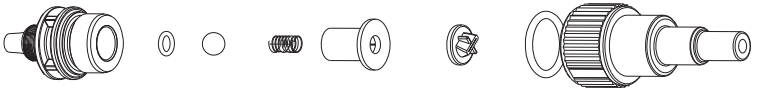

6.0 How to Adjust The Output

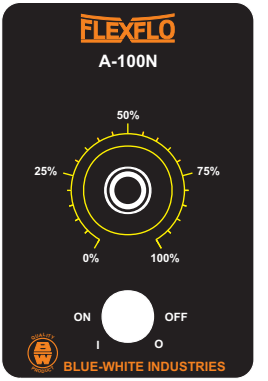

6.1 Fixed Cycle Timer Models -The pumping mechanism is turned on and off by an electronic cycle timer. The total-time cycle is factory preset and is not user adjustable. The on-time cycle is adjustable from 5% to 100% of the total cycle time (model A-100NS timers adjust from .5 to 6 seconds with total time cycle of 60 seconds). Example: If the total-time cycle is 60 seconds and the on-time cycle is adjusted for 25 percent, the pump will run for 15 seconds and turn off for 45 seconds (60 second total cycle). This cycle is repeated until either the power switch is turned off, the cycle time is changed or the input power is disconnected from the pump.

To adjust the pump output -

- Slide the slide clamps to the left only far enough to open the control panel door.
- Turn the adjustment knob to the desired percentage of on-time per cycle.

Note: When power is applied to the pump, the A-100N will either automatically begin to pump, or maintain power-off status, depending on the power switch status.

6.2 Variable Speed Model -The speed of the pumping mechanism is adjustable from 5 % through 100%.

To adjust the pump output -

- Slide the slide clamps to the left only far enough to open the control panel door.
- Turn the adjustment knob to the desired percentage of speed.

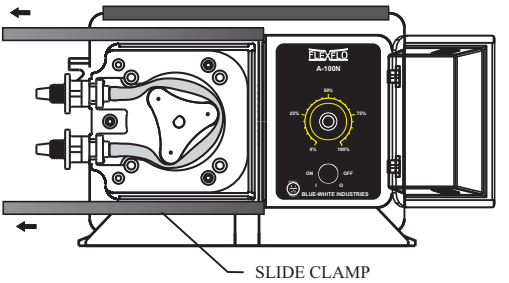

6.3 TFD (Tube Failure Detection) - The pump is equipped with a *Tube Failure Detection System* which is designed to stop the pump and provide an open collector (sinking) output signal in the event the pump tube should rupture and chemical enters the pump head. This patented system is capable of detecting the presence of a large number of chemicals including Sodium Hypochlorite (Chlorine), Hydrochloric (muriatic) Acid, Sodium Hydroxide, and many others. The system will not be triggered by water (rain, condensation, etc.) or silicone oil (roller and tubing lubricant).

If the system has detected chemical, the pump tube must be replaced and the **pump head and roller assembly must be thoroughly cleaned**.

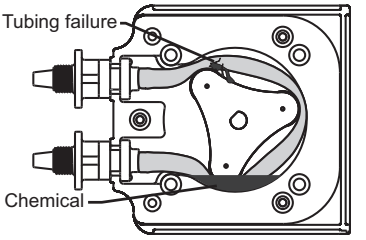

Confirm Chemical Detection - To determine if your chemical will be detected by the system, remove the pump tube and roller assembly. Place a small amount of the chemical in the bottom of the pump head - just enough to cover the sensors. Turn on the pump. If the TFD system detects the chemical, the pump will stop after a five second confirmation period. If the TFD system does not detect the chemical, the pump will continue to run after the confirmation period. Carefully clean the chemical out of the pump head being sure to remove all traces of chemical from the sensor probes. Turn the power switch off and on to reset the pump.

Open Collector Alarm Output - An open collector (sinking) output signal is provided with the TFD system. (See page 6).

6.4 (FVS) Flow Verification System - The pump is equipped with a *Flow Verification System* which is designed to stop the pump and provide an open collector (sinking) output signal in the event the sensor does not detect chemical during pump operation. This could indicate a clogged injection fitting, empty chemical solution tank, worn pump tube, loose tubing connection, etc.

The system features an alarm delay time of 6 seconds which allows the pump to clear any gasses that may have accumulated during stopped operation. The pump will stop, and the alarm mode activated, if no pulses are received by the pump and the alarm delay time period has ended. Turn the power switch off and on to clear the alarm and restart the pump. The Flow Verification Sensor is sold as an optional accessory.

Confirm the FVS flow range - The Flow Verification Sensor (FVS) will only function within its operating range. Sensor model FV-100-6V has an operating range of 30-300 ml/min (1-10 oz/min). If the pump's output is less than 30 ml/min (0.5 ml/sec), the sensor will not detect chemical and a signal will not be sent to the pump.

SENSOR MODEL NUMBER	OPERATING FLOW RANGE (ml/min)
FV-100-6V	30-300
FV-200-6V	100-1000
FV-300-6V	200-2000
FV-400-6V	300-3000
FV-500-6V	500-5000
FV-600-6V	700-7000

Install the FVS Flow Sensor - The Flow Verification Sensor (FVS) should be installed on the inlet (suction) side of the pump tube. The sensor includes a PVC tubing insert, located inside the sensor's female thread connection, that is designed to seal the sensor onto the pump tube inlet adapter. Thread the sensor onto the pump tube until the tubing insert is snug against the pump tube inlet fitting - do not over-tighten.

Connect the red/white (+), black (-), and bare (signal) wires from the sensor to the red (+), black (-), and yellow (signal) wires on the plug connector. Knock-out the liquid-tite connector mounting hole on the side of the pump enclosure and install the liquid tight connector. Route the wires through the connector and tighten the connector nut. Plug the connector onto the circuit board at the pins marked "FVS". See page 6.

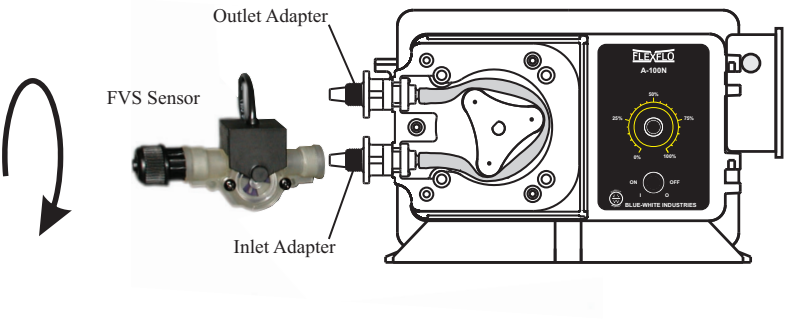

Open Collector Alarm Output - An open collector (sinking) output signal is provided with the FVS system. (See page 6).

7.0 How to Maintain the Pump

CAUTION: Proper eye and skin protection must be worn when installing and servicing the pump.

7.1 Routine Inspection and Maintenance

The pump requires very little maintenance. However, the pump and all accessories should be checked weekly. This is especially important when pumping chemicals. Inspect all components for signs of leaking, swelling, cracking, discoloration or corrosion. Replace worn or damaged components immediately.

Cracking, crazing, discoloration and the like during the first week of operation are signs of severe chemical attack. If this occurs, immediately remove the chemical from the pump. Determine which parts are being attacked and replace them with parts that have been manufactured using more suitable materials. The manufacturer does not assume responsibility for damage to the pump that has been caused by chemical attack.

7.2 How to Clean and Lubricate the Pump

The pump will require occasional cleaning and lubricating. The amount will depend on the severity of service.

ÔWhen changing the pump tube assembly, the pump head chamber, roller assembly and pump head cover should be wiped free of any dirt and debris.

ÔThe pump head cover bearing may require grease periodically. Apply a small amount of grease (Aeroshell aviation grease #5 or equivalent) when necessary.

ÔAlthough not necessary, 100% silicone lubrication may be used on the roller assembly.

ÔPeriodically clean the injection/check valve assembly, especially when injecting fluids that calcify such as sodium hypochlorite. These lime deposits and other build ups can clog the fitting, increase the back pressure and interfere with the check valve operation.

ÔPeriodically clean the suction strainer.

ÔPeriodically inspect the air vents located under the motor compartment and on the rear panel. Clean if necessary.

7.3 How to Replace the Pump Tube

The pump tube assembly will eventually break if not replaced. The tube has been designed for a minimum service life of 500 hours. However, the life of the tube is affected by many factors such as the type of chemical being pumped, the amount of back pressure, the motor RPM, temperature and others. The pump tube assembly must be inspected and replaced regularly.

Remove the Old Pump Tube - The pump roller assembly spins in a counter clockwise direction. The pump head inlet (suction) side is located at the bottom of the pump and the outlet (discharge) is located at the top of the pump head.

Release any pressure that may be in the discharge tubing.

Disconnect the suction and discharge tubes from the pump tube.

Remove the pump head cover.

With the pump running, pull the inlet fitting out of the pumphead. Guide the tube counter clockwise away from the rollers. Pull the outlet fitting out of the pump head.

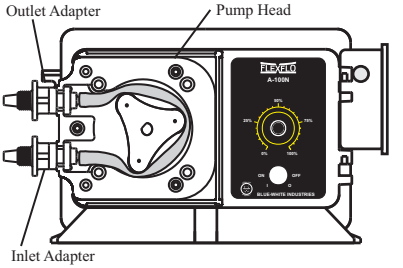

Install the New Pump Tube - Be sure the pump head chamber is clean and free of any debris.

Remove and inspect the roller assembly. Be sure the rollers spin freely. If required, apply a small amount of grease to the pump head cover bearing.

With the pump running, insert the inlet (suction) side of the Pump Tube fitting into the pump head.

Carefully guide the Pump Tube into the pump head. Stretch the tube slightly and insert the outlet (discharge) fitting into the upper retaining slot in the pump head.

Place the clear cover on the pump head and secure with three screws.

Tip! Apply silicone lubrication to outside of Flex-A-Thane tube for longer tube life.

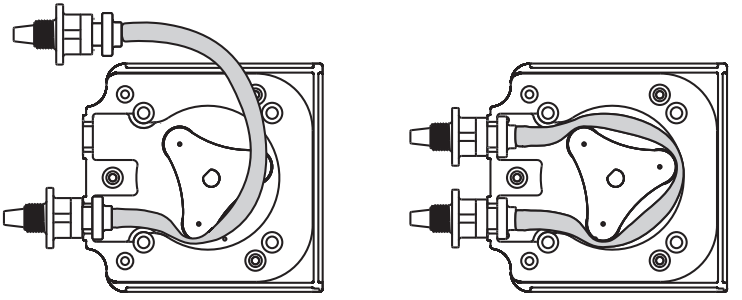

REPLACEMENT PARTS DRAWING

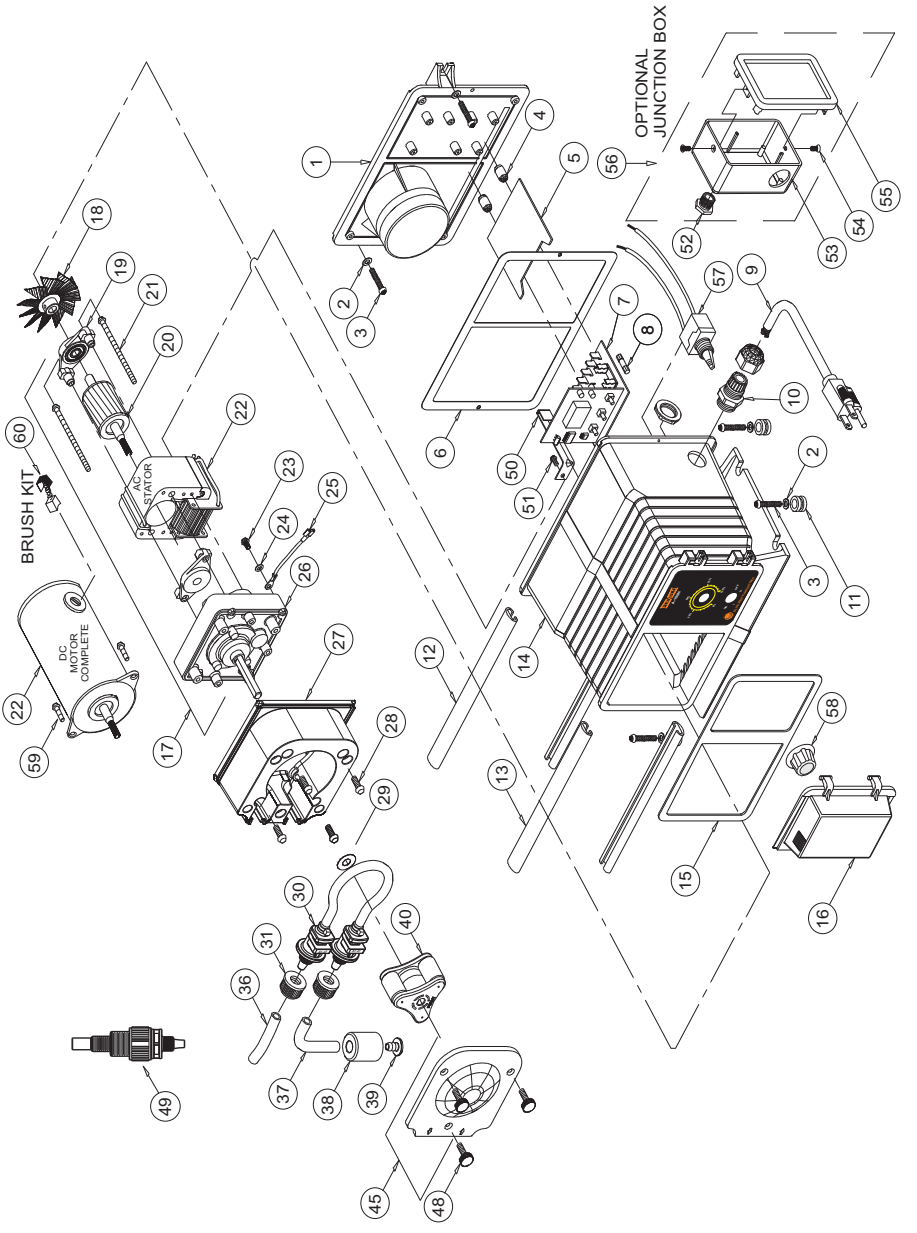

REPLACEMENT PARTS LIST

Item	Part No	Description	Qty
1	71000-214	Enclosure Back With Gasket,	1
2	90011-094	Washer, #10 Stainless	2
3	90011-091	Screw, #10 X 1.0" Phillips Steel	4
6	90006-580	Gasket, Back Plate, Neoprene	1
7	A-023N-B	Percent timer (60 Sec), A-100NA	1
	A-023N-H	Percent timer (5 Sec), A-100NC	1
	A-023N-F	Percent timer (Spa), A-100NS	1
	C-1817N-1	Speed Cntrl, A-100NF, 115V60	1
	C-1817N-4	Speed Cntrl, A-100NF, 220V50	1
	C-1817N-5	Speed Cntrl, A-100NF, 230V60	1
N/s	90010-036	Wire Nut, Blue	4
N/s	90010-037	Wire Nut, Orange	1
N/s	76001-030	Lead Wire, Blu/white, 115v	1
N/s	76001-031	Lead Wire, Red/white, 230v	1
N/s	76001-032	Lead Wire, Brn/white, 220v	1
N/s	76001-033	Lead Wire, Yellow, 220v	1
N/s	76001-034	Lead Wire, Black, 115v	1
9	90010-110	Power Cord, 115v60hz,	1
	90010-196	Power Cord, 220v50hz,	1
	90010-133	Power Cord, 230v60hz,	1
10	A-033N	Cord Inlet Bushing	1
11	90003-559	Mounting Feet, Rubber	4
12	76001-000	Slide Clamp, Enclosure Rear	1
13	76000-999	Slide Clamp, Enclosure Front	1
14	71000-187	Encl, Percentage models - P/Cord	1
	71000-188	Encl, Fixed model "X" - P/Cord	1
	71000-219	Encl, percentage models - J-box	1
	71000-220	Encl, Fixed feed model "X" J-box	1
15	90006-579	Gasket, Enclosure Front, Neoprene	1
16	90002-191	Door, Electronic Controls Cover	1
17	70002-146	Gearmotor, 14 Rpm, 115v60hz	1
	70002-147	Gearmotor, 30 Rpm, 115v60hz	1
	70002-156	Gearmotor, 45 Rpm, 115v60hz	1
	70002-159	Gearmotor, 60 Rpm, 115v60hz	1
	70002-148	Gearmotor, 14 Rpm, 220v50hz	1
	70002-149	Gearmotor, 30 Rpm, 220v50hz	1
	70002-157	Gearmotor, 45 Rpm, 220v50hz	1
	70002-160	Gearmotor, 60 Rpm, 220v50hz	1
	70002-150	Gearmotor, 14 Rpm, 230v60hz	1
	70002-151	Gearmotor, 30 Rpm, 230v60hz	1
	70002-158	Gearmotor, 45 Rpm, 230v60hz	1
	70002-161	Gearmotor, 60 Rpm, 230v60hz	1
	70002-241	G/motor, V/S 14Rpm, 90VDC	1
	70002-242	G/motor, V/S 30Rpm, 90VDC	1
	70002-243	G/motor, V/S 45Rpm, 90VDC	1
	70002-244	G/motor, V/S 60Rpm, 90VDC	1
18	90006-581	Fan, Motor, 2.25" Diameter,	1
19	C-612PB	Bearing Bracket With Bearing	2
20	C-616PN	Rotor 14, 30RPM With Spacers	1
	C-616PN-32	Rotor 45, 60RPM With Spacers	1
21	C-625	Screw, Motor, 14, 30RPM Phil	2
	C-621-32	Screw, Motor, 45, 60RPM Phil	2
22	71000-211	Stator 14/30RPM, 115v Blu/Yel	1
	71000-213	Stator 14/30RPM, 220v Brn/yel	1
	71000-212	Stator 14/30RPM, 230v Red/Yel	1
	71000-466	Stator 45/60RPM, 115v Blu/Yel	1
	71000-467	Stator 45/60RPM, 220v Brn/yel	1
	71000-468	Stator 45/60RPM, 230v Red/Yel	1
	90010-242	Motor, 90V Dc, model "F"	1
24	90011-078	Washer, Ground Screw, #8 Star	1
25	90010-126	Wire, ground, Green	1
26	A-008-1	Gearbox, 14 Rpm	1
	A-008-2	Gearbox, 30 Rpm	1
	A-008-3	Gearbox, 45 Rpm	1
	A-008-4	Gearbox, 60 Rpm	1
27	76001-009	Pumphead, no TFD sensors	1
	71000-488	Pumphead, w/TFD sensors	1
28	C-324NScrew, P/head, 10-32 X .50		4
29	A-031	Spacer, Rotor	1
30	A1-4T	Tube, A-100N S/A -4T Flex-A-Prene®	1
	A1-6T	Tube, A-100N S/A -6T Flex-A-Prene®	1
	A1-7T	Tube, A-100N S/A -7T Flex-A-Prene®	1
	A1-8T	Tube, A-100N S/A -8T Flex-A-Chem®	1
	A1-1T	Tube, A-100N S/A -1T Flex-A-Thane®	1
	A1-2T	Tube, A-100N S/A -2T Flex-A-Thane®	1
	A1-3T	Tube, A-100N S/A -3T Flex-A-Thane®	1
	A1-5T	Tube, A-100N S/A -5T Viton	1
31	C-330-6	Nut, Tube, .37 O.D. Tubing	1
36	C-335-6	Tubing, Outlet, .37O.D.X5ft, Poly	1
37	C-334-6	Tubing, Inlet, .37O.D.X5ft, Pvc	1
38	C-346	Weight, Inlet Tubing, Ceramic	1
39	C-342-6	Strainer, Inlet Tube, Polypro	1
40	71000-159	Roller, -4, -6 tubes (white rollers)	1
	71000-255	Roller, -5 Viton tube	1
	71000-350	Roller, -7 tubes (black rollers)	1
45	71000-156	Cover, P/head With Bearing	1
48	90011-160	Screw, P/head Cover, 8-32 X .62	3
49	A-014N-6A	Inj Valve, .5-.25 Mpt X .37 O.D.	1
50	90006-583	Motor Clip, 14, 30RPM	1
	90006-601	Motor Clip, 45, 60RPM	1
51	90011-146	Screw, Motor Clip, 8-32 X .25	1
52	90007-515	Bushing, J-Box Connector, Alum.	1
53	76001-029	Junction Box, Valox	1
54	90011-129	Screw, 6-32 X .25 S Black	2
55	71000-133	Cover, J-Box w/Gasket &Label	1
56	70000-656	J-Box Assembly, Complete	1
N/s	90008-151	J-box Hole Plug .75 Dia Blk	1
57	A-022	Power Switch	1
N/s	A-030	Push button prime swtich	1
58	A-032	Knob, adjustment	1
59	90011-023	Screw, Motor, 8-32 x .50 Phill	2
60	C-1814N-2	Motor brush set, 90VDC motor	1

LIMITED WARRANTY

Your new pump is a quality product and is warranted to be free of defects as set down in this policy. All parts, including rubberized goods, and labor are covered under warranty for 90 days from the date of purchase. Used peristaltic pump tube assemblies are not warranted. Parts, excluding rubberized goods, are covered under warranty for 12 months from the date of purchase.
Warranty coverage does not include damage to the pump that results from misuse, carelessness, abuse or alteration. Only the repair or the replacement of the pump is covered. Blue-White Industries does not assume responsibility for any other loss or damage.
Warranty status is determined by the pump's serial label and the sales invoice or receipt. The serial label must be on the pump and the pump must be accompanied by the sales invoice or receipt to obtain warranty coverage. The warranty status of the pump will be verified by Blue-White or a factory authorized service center.

Please be advised that although safety tested by independent testing laboratories, Caution - This Pump Has Been Evaluated For Use With Water Only. The Pump has also been tested by NSF International for use with 12-1/2% Sodium Hypochlorite only. ***Installers and operators of these devices must be well informed and aware of the precautions to be taken when injecting various chemicals -especially those considered hazardous or dangerous.***
Should it become necessary to return an injector for repair or service, you must attach information regarding the chemical used as some residue may be present within the unit which could be a hazard to service personnel.
Blue-White Industries will not be liable for any damage that may result by the use of chemicals with their injectors and it's components. Thank you.

PROCEDURE FOR IN WARRANTY REPAIR

Carefully pack the pump to be repaired. To assist in troubleshooting, please include the foot strainer and injection/check valve fitting if possible. Enclose a brief description of the problem as well as the original invoice or sales receipt showing the date of purchase. The receipt will be returned with the unit. Prepay all shipping costs. COD shipments will not be accepted. Warranty service must be performed by the factory or an authorized service center. Damage caused by improper packaging is the responsibility of the sender.



Users of electrical and electronic equipment (EEE) with the WEEE marking per Annex IV of the WEEE Directive must not dispose of end of life EEE as unsorted municipal waste, but use the collection framework available to them for the return, recycle, recovery of WEEE and minimize any potential effects of EEE on the environment and human health due to the presence of hazardous substances. The WEEE marking applies only to countries within the European Union (EU) and Norway. Appliances are labeled in accordance with European Directive 2002/96/EC.
Contact your local waste recovery agency for a *Designated Collection Facility* in your area.

AUTHORIZED SERVICE CENTERS

To find an authorized service center near you, please call Blue-White Industries at (714) 893-8529 or e-mail us at sales@blue-white.com

Blue-White®
Industries, Ltd.

5300 Business Drive
Huntington Beach, CA 92649
USA
Phone: 714-893-8529 **FAX:** 714-894-9492
E mail: sales@blue-white.com **or** techsupport@blue-white.com
Website: www.blue-white.com

 # 80000-327 **Rev.15 9/11/2019**