FLEXFLO®

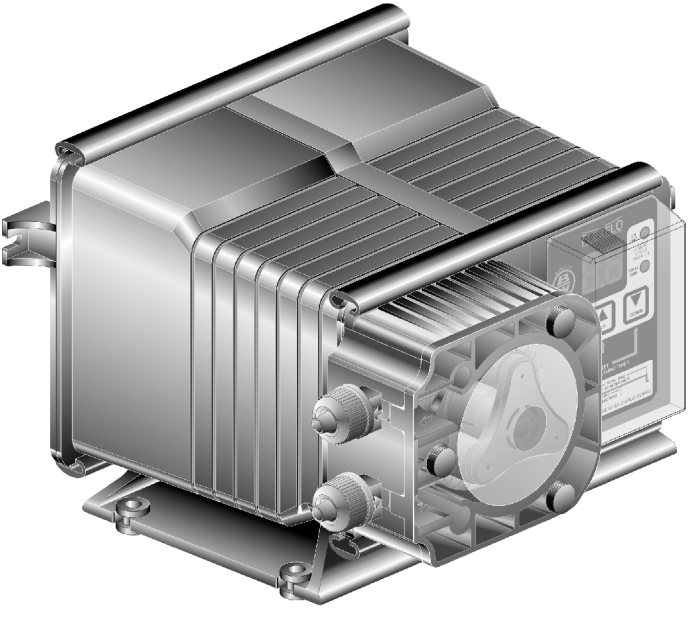

MODEL A-100NE

Peristaltic Injector Pump
Operating Manual

Blue-White®
Industries, Ltd.

5300 Business Drive
Huntington Beach, CA 92649
USA
Phone: 714-893-8529 **FAX:** 714-894-9492
E mail: sales@blue-white.com **or** techsupport@blue-white.com
Website: www.blue-white.com

TABLE OF CONTENTS

1.....Introduction **3**
2.....Specifications.....**3**
3.....Features.....**3**
4.....Unpacking.....**3**
5.....Installation **4**
5.1..Mounting location **4**
5.2..Input power connections **5**
5.3..External input signal connections.....**6**
5.4..How to install the tubing and fittings.....**8**
6.....How to operate the A-100N **9**
6.1..Pump output controls **9**
6.2..Mode 0 - TFD and FVS System set-up.....**10**
6.3..Mode 1 - Manually Adjusting the output.....**12**
6.4..Mode 2 - 4-20 mA input.....**14**
6.5..Mode 3 - 0-10 VDC input **16**
6.6..Mode 4 - Frequency (Hz) input **18**
6.7..Mode 5 - Pulse input (Batch).....**20**
7.....How to maintain the A-100NE.....**21**
7.1..Routine inspection and cleaning.....**21**
7.2..How to clean and lubricate the A-100N.....**21**
7.3..500 hour service warning timer.....**21**
7.4..How to replace the pump tube.....**22**
Replacement parts drawing **24**
Replacement parts list **25**
Warranty information.....**26**

1.0 Introduction

Thank you for purchasing the A-100N Model E Peristaltic Metering Pump. The A-100N is designed to inject chemicals into piping systems. The pump has been tested by NSF International for use with 12 ½% Sodium Hypochlorite. The Model E is equipped with external input control circuitry which allows the pumps output to be externally controlled by either a 4-20mA input signal, a 0-10V DC input signal or a pulsed input signal.

2.0 Specifications

Maximum Working Pressure	100 psig / 6.9 bar (most models)
Maximum Fluid Temperature	130° F / 54°C
Ambient Temperature Range	14 to 110°F / -10 to 43°C
Duty Cycle	Continuous
Maximum Solids	50% by volume
Maximum Viscosity	5,000 Centipoise
Maximum Suction Lift	up to 30 ft. water
Power Requirements	115V60Hz 80 Watts, 220V50Hz 40 Watts, 230V60Hz 45 Watts
Dimensions	6-1/8" H x 10-1/8" W x 9" D
Weight	8 lb.

3.0 Features

- Peristaltic Pump Tube does not require valves.
- Self priming. Cannot vapor lock.
- High outlet pressure capability of 100 psig.*
- High inlet suction lift capability of 30 feet.
- Patented Tube Failure Detection (TFD)system.
- Patented pump tube assembly design.
- Digital electronic feed rate control.
- Pump Tube service warning timer.
- Corrosion proof Valox housing.
- Tamper resistant electronic control panel cover.

4.0 Unpacking

Your pump package should contain the following:
1 - Injector pump with 2 pump tube assemblies
1 - suction tube strainer
1 - ceramic tubing weight
1 - 5' Length of clear PVC suction tubing
1 - 5' Length of opaque LLDPE discharge tubing
1 - Injection fitting with internal back-flow check valve
1 - Mounting hardware kit
1 - Shroud (weather proof cover see page 10)

5.0 Installation

CAUTION: Proper eye and skin protection must be worn when installing and servicing the pump.

Note: *All diagrams are strictly for guideline purposes only. Always consult an expert before installing the pump into specialized systems. The pump should be* ***serviced by qualified persons only.***

5.1 Mounting Location

Choose an area located near the chemical supply tank, chemical injection point and electrical supply. Although the pump is designed to withstand outdoor conditions, a cool, dry, well ventilated location is recommended. Install the pump where it can be easily serviced.

- Mount the pump to a secure surface or wall using the enclosed hardware. Wall mount to a solid surface only. Mounting to drywall with anchors is not recommended.
- Mount the pump close to the injection point. Keep the outlet (discharge) tubing as short as possible. Longer tubing increases the back pressure at the pump tube.
- Your solution tank should be sturdy. Keep the tank covered to reduce fumes. Do not mount the pump directly over your tank. Chemical fumes may damage the unit. Mount the pump off to the side or at a lower level than the chemical container.
- Mounting the pump lower than the chemical container will gravity feed the chemical into the pump. This “flooded suction” installation will reduce output error due to increased suction lift. You must install a shut-off valve, pinch clamp or other means to halt the gravity feed to the pump during servicing.
- Be sure your installation does not constitute a cross connection with the drinking water supply. Check your local plumbing codes.
- Be sure to install a back-flow prevention check valve.
- An anti-syphon valve is not required. syphoning cannot occur.

INJECTOR MOUNTING

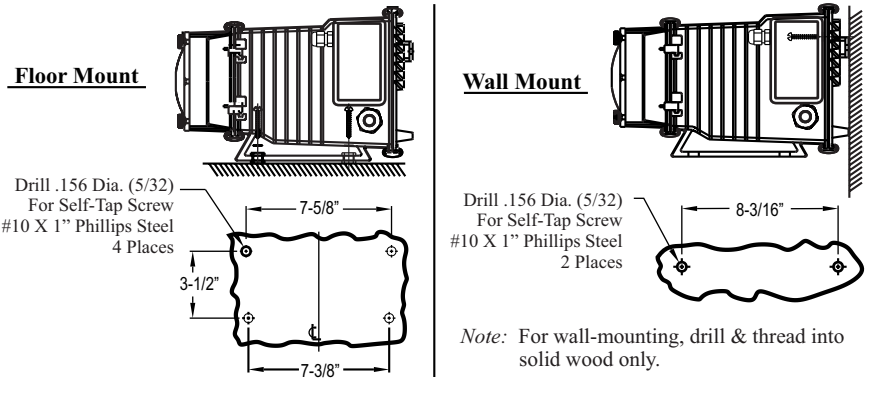

Note: For wall-mounting, drill & thread into solid wood only.

TYPICAL INSTALLATION

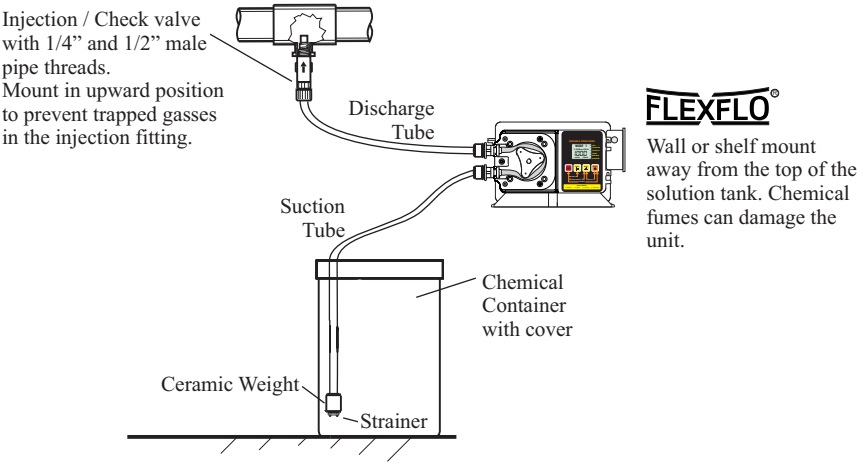

PARTS LOCATOR DRAWING

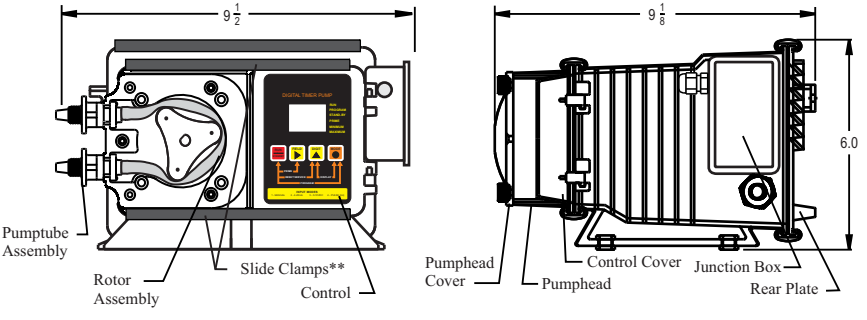

5.2 Input Power Connections

WARNING: Risk of electric shock.

- Be certain to connect the pump to the proper supply voltage. Using the incorrect voltage will damage the pump and may result in injury. The voltage requirement is printed on the pump serial label.
- Removable resistors on the circuit board are factory preset for the correct voltage. See page 7 Circuit Board Connections diagram for details.
- The pump is supplied with a ground wire conductor and a grounding type attachment plug (power cord). To reduce the risk of electric shock, be certain that the power cord is connected only to a properly grounded, grounding type receptacle.

  Note: *When in doubt regarding your electrical installation, contact a licensed electrician.*

5.3 External Input Signal Connections

The pump will accept a variety of external control input signals; 4-20 mA , 0-10 VDC, TTL, CMOS, AC Sine Waves, Contact Closures, Hall Effect, NPN. The 4-20mA and 0-10 VDC loops must be powered.

All wiring connections are to be made inside of the junction box located on the side of the pump. Special connectors are not required. A liquid-tite connector is supplied and should be used for the external signal cable. The signal input wires are color coded to the type of signal being used.

SIGNAL INPUT WIRE COLOR CODES

INPUT TYPE	WIRE COLOR CODE
4-20 mA	**BLUE** (+) & **BLACK** (-)
0-10 VDC	**ORANGE** (+) & **BLACK** (-)
TTL, CMOS	**WHITE** (+) & **BLACK** (-)
CONTACT (10v @ 2 mA max) HALL EFFECT, NPN	**RED** (+) & **WHITE** (-)
ALARM RELAY	**PURPLE** & **PURPLE**
FLOW VERIFICATION SENSOR	**RED/WHITE** (+ 20VDC) & **BLACK** (-) & **YELLOW** (signal)
MOTOR ON SIGNAL 5-20V DC open collector output closed while motor is energized	**BROWN** (+) & **BLACK** (-)

PADDLEWHEEL SENSOR SIGNAL INPUT WIRING

BLUE-WHITE PADDLEWHEEL SENSOR TYPE	PADDLEWHEEL SENSOR WIRE COLOR CODE	PUMP INPUT WIRE COLOR CODE
MODEL FH HALL EFFECT SENSOR	**RED** (+) **BLACK** (-) **BARE (signal)**	**RED** (+ 20VDC) **BLACK** (-) **WHITE (signal)**
MODEL FC AC SINE WAVE SENSOR	**RED** (+) **BLACK** (-)	**WHITE** (+) **BLACK** (-)

MOTOR LEADWIRES

INPUT VOLTAGE	HOT LEADWIRE	NEUTRAL LEADWIRE	GROUND LEADWIRE
115V 60Hz	YELLOW	BLUE	GREEN
220V 50Hz	YELLOW	BROWN	GREEN
230V 60Hz	YELLOW	RED	GREEN

CIRCUIT BOARD CONNECTIONS

Program Disable Jumper - Located on front of Control board.
Un-installed = enable front panel programming (default)
Installed = disable front panel programming

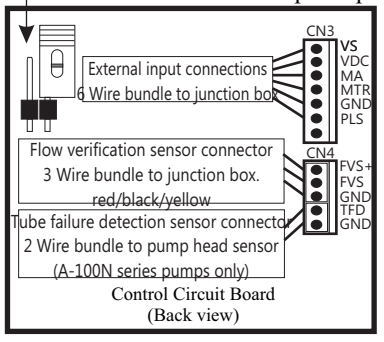

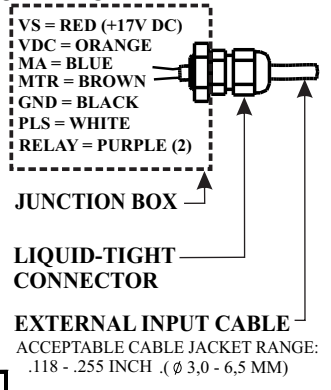

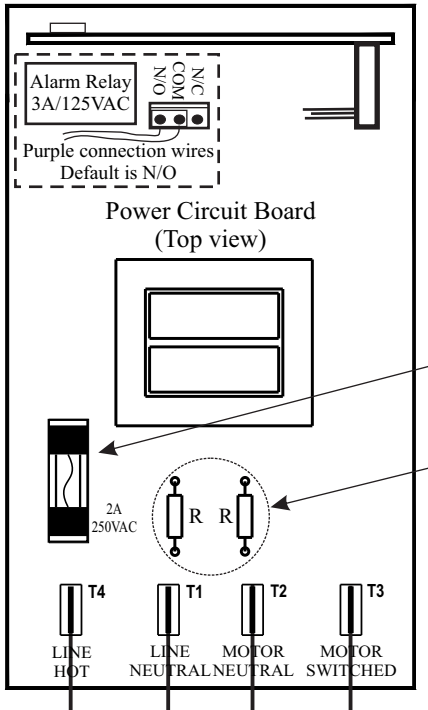

Protector Fuse
2 Amps, 250 Volt AC
(little Fuse #235002
or Equivalent)

INPUT VOLTAGE
RESISTOR PLACEMENT

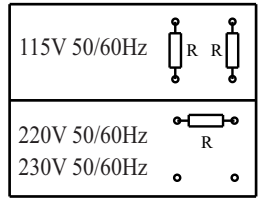

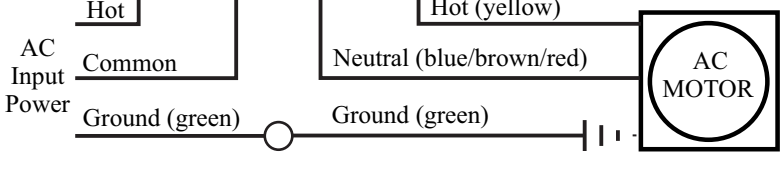

5.4 How To Install the Tubing and Fittings

CAUTION: Proper eye and skin protection must be worn when installing and servicing the pump.

- **Inlet Tubing -** Locate the inlet fitting of the Pump Tube. Remove the tube nut. Push the clear PVC suction tubing onto the compression barb of the fitting. Use the tube nut to secure the tube. Hand tighten only.
- **Strainer** - Trim the inlet end of the suction tubing so that the strainer will rest approximately two inches from the bottom of the solution tank. This will prevent sediment from clogging the strainer. Slip the ceramic weight over the end of the suction tube. Press the strainer into the end of the tube. Secure the ceramic weight to the strainer. Drop the strainer into the solution tank.

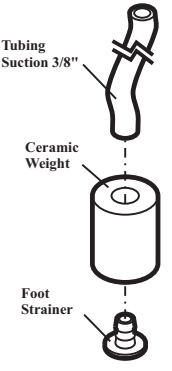

- **Outlet Tubing -** Locate the outlet fitting of the Pump Tube. Remove the tube nut. Push the opaque outlet (discharge) tubing onto the compression barb of the fitting. Use the tube nut to secure the tube. Hand tighten only.

  Keep outlet tube as short as possible.

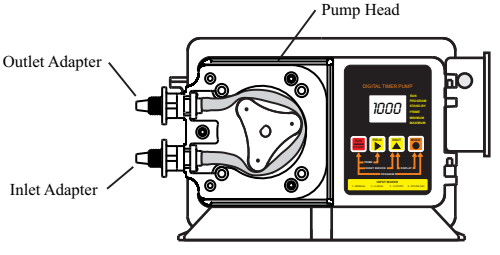

- **Injection/Check Valve Fitting Installation** - The Injection/Check valve fitting is designed to install directly into either 1/4" or 1/2" female pipe threads. This fitting will require periodic cleaning, especially when injecting fluids that calcify such as sodium hypochlorite. See section 7.0. Install the Injection/Check valve directly into the piping system. To prevent trapped gasses, install the fitting in an upward direction. Use PTFE thread sealing tape on the pipe threads.
  Push the opaque outlet (discharge) tubing onto the compression barb of the Injection/Check valve fitting. Use the tube nut to secure the tube. Hand tighten only.

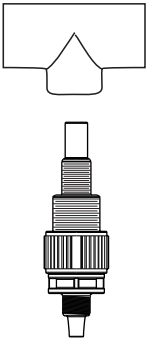

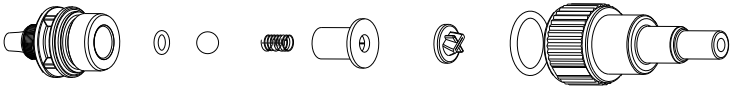

6.0 How to operate the pump

6.1 Pump Output Controls -

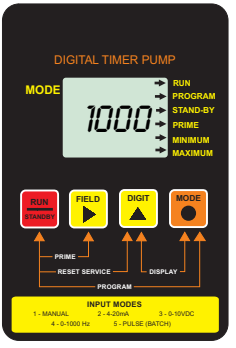

Open the control panel door by sliding the upper and lower slide clamps to the left.

- **RUN/STANDBY** Button -
  - Press to start and stop the pump. The ***ARROW*** next to the word RUN will light when in the run mode. The ***ARROW*** next to the word STAND-BY will blink when in
  - Press to clear ***ALARM.***
  - When pressed with the FIELD Button, initiates a 99 second prime cycle which temporarily overrides the mode setting and runs the pump motor at 100% speed. The ***ARROW*** next to the word PRIME will blink.
  - When pressed with the DIGIT button, resets the 500 hour service warning timer to zero.
  - When pressed with the MODE button, initiates the programming mode. The ***ARROW*** next to the word PROGRAM will blink.
- **FIELD** Button -
  - In the programming mode, selects the digit to be changed.
- **DIGIT** Button -
  - In the programming mode, increases the selected digit.
  - When pressed with the MODE Button, toggles the display from operating time cycle values to input signal value.
- **MODE** Button -
  - Used to select one of five operating modes.

Mode 0 - TFD system and FVS system set-up
Mode 1 - Manual Adjustment (external input disabled)
Mode 2 - 4-20mA input
Mode 3 - 0-10VDC input
Mode 4 - Frequency input adjusts cycle on-time
Mode 5 - Pulse input count = single batch time

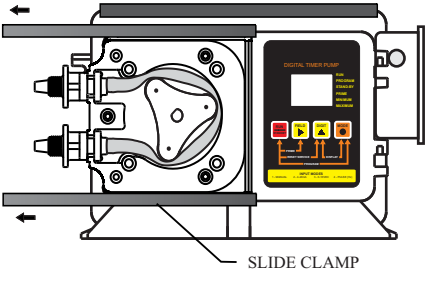

- **(FVS) Flow Verification System** - The A-100NE is equipped with a *Flow Verification System* which is designed to stop the pump and provide a contact closure output in the event the sensor does not detect chemical during pump operation. This could indicate a clogged injection fitting, empty chemical solution tank, worn pump tube, loose tubing connection, etc.
  To allow the pump to clear any gasses that may have accumulated during stopper operation (such as with chlorine), an alarm delay time value from 1-256 seconds must be programmed (An alarm delay value of 000 seconds disables the FVS system). The pump will stop, and the alarm mode activated, if no pulses are received by the pump and the alarm delay time period has ended. Press the STAND-BY button twice to clear the alarm and restart the pump. The Flow Verification Sensor is sold as an optional accessory.

Confirm the FVS flow range - The Flow Verification Sensor (FVS) will only function within its operating range. Sensor model FV-100-6V has an operating range of 30-300 ml/min (1-10 oz/min). If the pump's output is less than 30 ml/min (0.5 ml/sec), the sensor will not detect chemical and a signal will not be sent to the pump.

SENSOR MODEL NUMBER	OPERATING FLOW RANGE (ml/min)
FV-100-6V	30-300
FV-200-6V	100-1000
FV-300-6V	200-2000
FV-400-6V	300-3000
FV-500-6V	500-5000
FV-600-6V	700-7000

Install the FVS Flow Sensor - The Flow Verification Sensor (FVS) should be installed on the inlet (suction) side of the pump tube. The sensor includes a PVC tubing insert, located inside the sensor's female thread connection, that is designed to seal the sensor onto the pump tube inlet adapter. Thread the sensor onto the pump tube until the tubing insert is snug against the pump tube inlet fitting - do not over-tighten.
Connect the red/white, black, and white wires from the sensor to the red, black, and yellow wires located in the pump's junction box. See page 7.

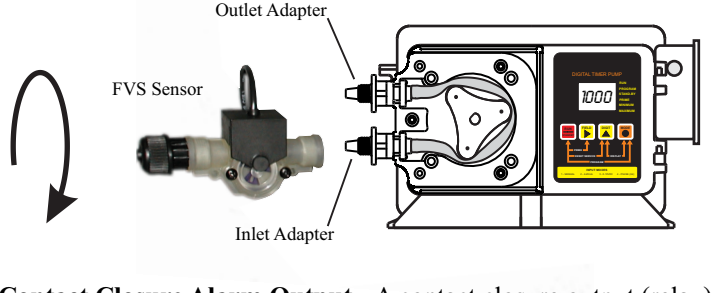

Contact Closure Alarm Output - A contact closure output (relay) is provided with the FVS system. The relay can be configured for normally open (factory default) or normally closed operation by properly positioning the connector plug on the circuit board (see page 7).

6.2 MODE 0 - TFD and FVS system set-up

Mode 0 is used to program the TFD (Tube Failure Detection) system and the FVS (Flow Verification System).

- **TFD (Tube Failure Detection)** - The A-100NE is equipped with a *Tube Failure Detection System* which is designed to stop the pump and provide a contact closure output in the event the pump tube should rupture and chemical enters the pump head. This patented system is capable of detecting the presence of a large number of chemicals including Sodium Hypochlorite (Chlorine), Hydrochloric (muriatic) Acid, Sodium Hydroxide, and many others. The system will not be triggered by water (rain, condensation, etc.) or silicone oil (roller and tubing lubricant). If the system has detected chemical, the pump tube must be replaced and the pump head and roller assembly must be thoroughly cleaned.

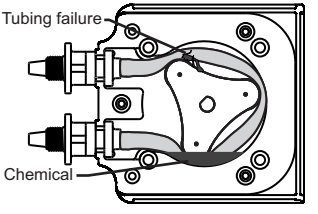

Confirm Chemical Detection - To determine if your chemical will be detected by the system, remove the pump tube and roller assembly. Place a small amount of the chemical in the bottom of the pump head - just enough to cover the sensors. Turn on the pump. If the TFD system detects the chemical, the pump will stop after a five second confirmation period and the ***ALARM*** icon will light on the display. If the TFD system does not detect the chemical, the pump will continue to run after the confirmation period. Carefully clean the chemical out of the pump head being sure to remove all traces of chemical from the sensor probes. Press the **RUN/STAND-BY** button to clear the alarm condition and restart the pump.
Contact Closure Alarm Output - A contact closure output (relay) is provided with the TFD system. The relay can be configured for normally open (factory default) or normally closed operation by properly positioning the connector plug on the circuit board (see page 7).

This **Shroud** is designed to weather proof this Peristaltic Pump. If the pump is wall mounted the shroud is not necessary and will still be considered weather proof.

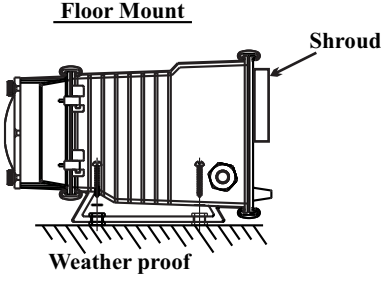

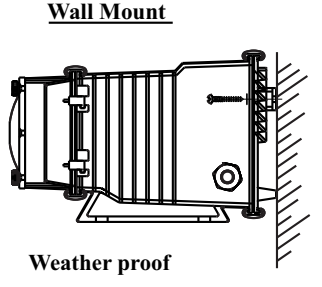

- **Enable and Program the TFD and FVS Systems**
  The TFD and FVS systems must be enabled.
  - ***Set the pump for mode 0***. Press the MODE button until ***MODE 0*** is shown on the LCD display.
  - ***Enter the programming mode.*** At the same time, press the RUN/STANDBY button and the MODE button. A blinking ARROW will point to the word PROGRAM indicating the program mode has been activated. The TFD icon will blink. The word ON will display indicating the TFD system is activated.

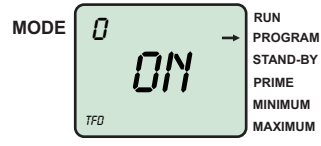

  - Press the DIGIT button to toggle the system on and off.
  - Press the MODE button to enter the FVS system programming. The FVS icon will blink. The display will indicate the current alarm delay time setting in seconds. (000 =

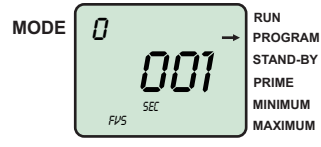

  - Press the DIGIT button to set the number of seconds of alarm delay time. The number will increase to a maximum of 256 seconds and roll over to OFF.
  - To exit the programming mode, press the RUN/STANDBY button and the MODE button at the same time. The arrow next to the word PROGRAM will disappear and an arrow will appear next to the word RUN.

    NOTE: If while in the program mode no buttons are pressed within 60 seconds, the circuitry will automatically return to the run mode.

6.3 Mode 1 - Manually adjusting the output - In this mode, the pump is turned on and off by an electronic cycle timer. The pump will energize for the duration of the "on time" and de-energize for the remainder of the "total time" thus completing one cycle. The cycle then repeats.

The "on time" and "total time" cycles are independently adjustable from 0.1 to 199.9 units of measure with a 0.1 unit resolution. The units of measure can be seconds, minutes, hours or days.

Example: If the "total time" cycle is adjusted for 90 seconds and the "on time" portion of the cycle is adjusted for 5 seconds, the pump will run for 5 seconds and turn off for 85 seconds (90 second total cycle). This cycle is repeated until either the standby button is pressed, the cycle time is changed or the input power is disconnected from the pump.

- ***Set the pump for mode 1***. Press the MODE button until ***MODE 1*** is shown on the LCD display.

- ***Enter the programming mode.*** At the same time, press the RUN/STANDBY button and the MODE button. A blinking ARROW will point to the word PROGRAM indicating the program mode has been activated. The total

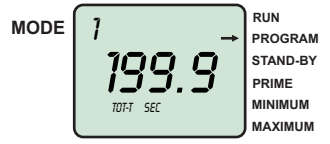

selected time unit icon will be displayed. The current total time setting will be displayed and the left most (selected) digit will blink. The decimal is fixed and cannot be moved.

- Pressing the DIGIT button will increase the selected digit.
- Pressing the FIELD button will select a new the digit to the right or the time unit.
- Press the DIGIT button to increase the selected digit or time unit.

- Press the MODE button to exit the total time programming screen and enter the on time programming screen. The ON-T icon will blink. The currently selected time unit icon will be displayed. The current on time setting will be displayed and the left most (selected) digit will blink.

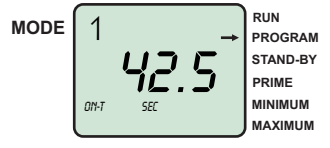

- Pressing the DIGIT button will increase the selected digit.
- Pressing the FIELD button will select a new the digit to the right or the time unit.
- Press the DIGIT button to increase the selected digit or time unit.
- At the same time, press the RUN/STANDBY button and the MODE button. A blinking ARROW will point to the word RUN indicating the run mode has been activated.

NOTE: If while in the program mode no buttons are pressed within 60 seconds, the circuitry will automatically return to the run mode.

6.4 Mode 2 - 4-20 mA input - In this mode, the on-time of the cycle will automatically adjust to match the received mA input value. When the mA input value is equal the programmed maximum, the pump will run continuously.

Four values must be programmed:

1) **ON-T** = The amount of time the pump will run, per cycle, when the minimum mA value is received. (Typically programmed to zero)
2) **mA minimum** = The mA input value that will result in the on time (**ON-T**). (Typically programmed to 4 mA)
3) **TOT-T** = The total cycle time.
4) **mA maximum** = The mA input value that will result in the pump running continuously.

Example:
ON-T setting = 0 seconds
mA minimum setting = 4mA
TOT-T setting = 8 seconds
mA maximum setting = 14.8mA

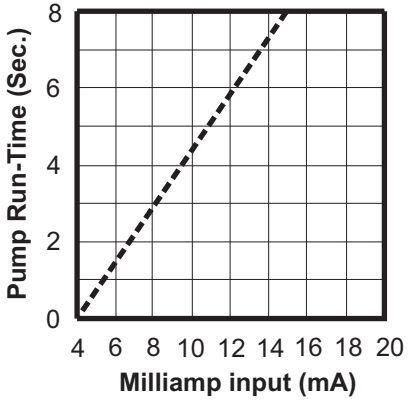

■ ***Set the pump for mode 2***. Press the MODE button until ***MODE 2*** is shown on the LCD display.

■ ***Enter the programming mode.*** At the same time, press the RUN/STANDBY button and the MODE button. A blinking ARROW will point to the word PROGRAM indicating the program mode has been activated. The on time ON-T

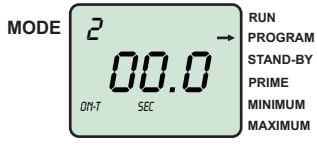

icon will blink. The currently selected time unit icon will be displayed. The current on time setting will be displayed and the left most (selected) digit will blink. The decimal is fixed and cannot be moved.

■ Pressing the DIGIT button will increase the selected digit.
■ Pressing the FIELD button will select a new the digit to the right or the time unit.
■ Press the DIGIT button to increase the selected digit or time unit.

- Press the MODE button to exit the on time programming screen and enter the mA minimum programming screen. The mA icon will blink. A blinking ARROW will appear next to the word MINIMUM. The current minimum mA setting will be displayed and the left most (selected) digit will blink.

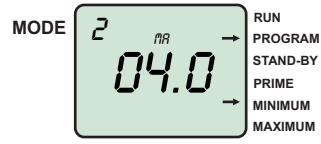

- Pressing the DIGIT button will increase the selected digit.
- Pressing the FIELD button will select a new the digit to the right.
- Press the DIGIT button to increase the selected digit.
- Press the MODE button to exit the mA minimum programming screen and enter the total time programming screen. The total time TOT-T icon will blink. The currently selected time unit icon will be displayed. The current total time setting will be displayed and the left most (selected) digit will blink. The decimal is fixed and cannot be moved.

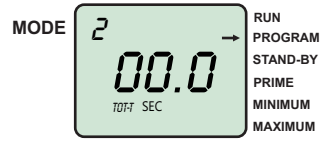

- Pressing the DIGIT button will increase the selected digit.
- Pressing the FIELD button will select a new the digit to the right or the time unit.
- Press the DIGIT button to increase the selected digit or time unit.
- Press the MODE button to exit the total time programming screen and enter the mA maximum programming screen. The mA icon will blink. A blinking ARROW will appear next to the word MAXIMUM. The current maximum mA setting will be displayed and the left most (selected) digit will blink.

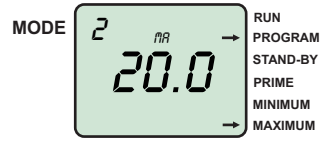

- Pressing the DIGIT button will increase the selected digit.
- Pressing the FIELD button will select a new the digit to the right.
- Press the DIGIT button to increase the selected digit.
- At the same time, press the RUN/STANDBY button and the MODE button. A blinking ARROW will point to the word RUN indicating the run mode has been activated.

NOTE: If while in the program mode no buttons are pressed within 60

6.5 Mode 3 - 0-10V DC input - In this mode, the on-time of the cycle will automatically adjust to match the received VDC input value. When the VDC value is equal the programmed maximum, the pump will run continuously.

Four values must be programmed:

1) **ON-T** = The amount of time the pump will run, per cycle, when the minimum VDC value is received. (Typically programmed to zero)
2) **VDC minimum** = The VDC input value that will result in the on time (**ON-T**). (Typically programmed to 0 VDC)
3) **TOT-T** = The total cycle time.
4) **VDC maximum** = The VDC input value that will result in the pump running continuously.

Example:
ON-T setting = 0 seconds
VDC minimum setting = 0 VDC
TOT-T setting = 6 seconds
VDC maximum setting = 7.5 VDC

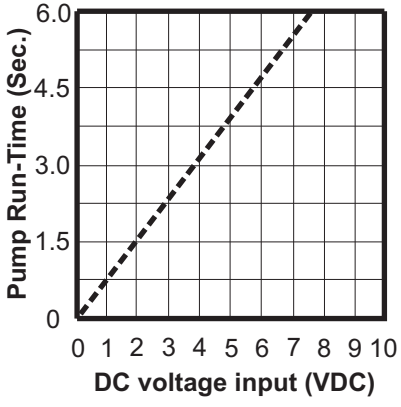

- ***Set the pump for mode 3.*** Press the MODE button until ***MODE 3*** is shown on the LCD display.
- ***Enter the programming mode.*** At the same time, press the RUN/STANDBY button and the MODE button. A blinking ARROW will point to the word PROGRAM indicating the program mode has been activated. The on time ON-T

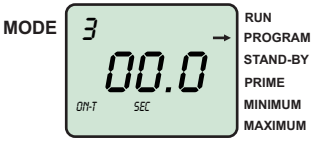

icon will blink. The currently selected time unit icon will be displayed. The current on time setting will be displayed and the left most (selected) digit will blink. The decimal is fixed and cannot be moved.

- Pressing the DIGIT button will increase the selected digit.
- Pressing the FIELD button will select a new the digit to the right or the time unit.
- Press the DIGIT button to increase the selected digit or time unit.

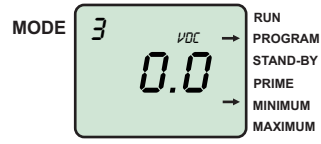

- Press the MODE button to exit the on time programming screen and enter the VDC minimum programming screen. The VDC icon will blink. A blinking ARROW will appear next to the word MINIMUM. The current minimum VDC setting will be displayed and the left most (selected) digit will blink.
- Pressing the DIGIT button will increase the selected digit.
- Pressing the FIELD button will select a new the digit to the right.
- Press the DIGIT button to increase the selected digit.
- Press the MODE button to exit the VDC minimum programming screen and enter the total time programming screen. The total time TOT-T icon will blink. The currently selected time unit icon will be displayed. The current total time setting will be displayed and the left most (selected) digit will blink. The decimal is fixed and cannot be moved.
- Pressing the DIGIT button will increase the selected digit.

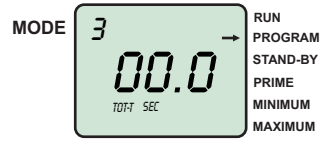

- Pressing the FIELD button will select a new the digit to the right or the time unit.
- Press the DIGIT button to increase the selected digit or time unit.
- Press the MODE button to exit the total time programming screen and enter the VDC maximum programming screen. The VDC icon will blink. A blinking ARROW will appear next to the word MAXIMUM. The current maximum VDC setting will be displayed and the left most (selected) digit will blink.
- Pressing the DIGIT button will increase the selected digit.
- Pressing the FIELD button will select a new the digit to the right.
- Press the DIGIT button to increase the selected digit.
- At the same time, press the RUN/STANDBY button and the MODE button. A blinking ARROW will point to the word RUN indicating the run mode has been activated.

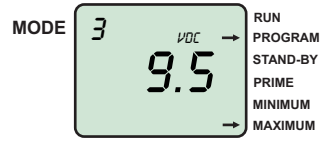

6.6 Mode 4 - Frequency (Hz) input - In this mode, the on-time of the cycle will automatically adjust to match the received Hz input value. When the Hz value is equal the programmed maximum, the pump will run continuously.

Four values must be programmed:

1) **ON-T** = The amount of time the pump will run, per cycle, when the minimum hZ value is received. (Typically programmed to zero)
2) **Hz minimum** = The Hz input value that will result in the on time (**ON-T**). (Typically programmed to 0 Hz)
3) **TOT-T** = The total cycle time.
4) **Hz maximum** = The Hz input value that will result in the pump running continuously.

Example:
ON-T setting = 0 seconds
Hz minimum setting = 0 Hz
TOT-T setting = 8 seconds
Hz maximum setting = 425 Hz

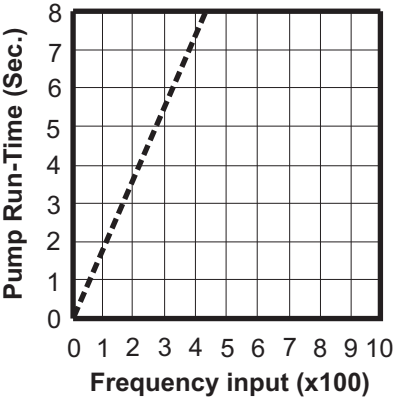

■ ***Set the pump for mode 4***. Press the MODE button until ***MODE 4*** is shown on the LCD display.

■ ***Enter the programming mode.*** At the same time, press the RUN/STANDBY button and the MODE button. A blinking ARROW will point to the word PROGRAM indicating the program mode has been activated. The on time ON-T

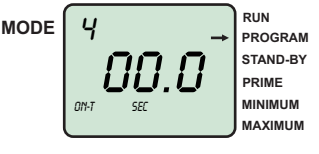

icon will blink. The currently selected time unit icon will be displayed. The current on time setting will be displayed and the left most (selected) digit will blink. The decimal is fixed and cannot be moved.

■ Pressing the DIGIT button will increase the selected digit.
■ Pressing the FIELD button will select a new the digit to the right or the time unit.

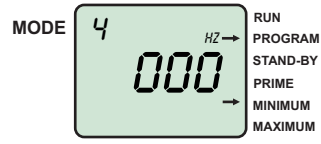

- Press the DIGIT button to increase the selected digit or time unit.
- Press the MODE button to exit the on time programming screen and enter the Hz minimum programming screen. The HZ icon will blink. A blinking ARROW will appear next to the word MINIMUM. The current minimum Hz setting will be displayed and the left most (selected) digit will blink.

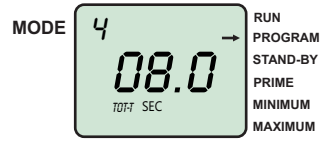

- Pressing the DIGIT button will increase the selected digit.
- Pressing the FIELD button will select a new the digit to the right.
- Press the DIGIT button to increase the selected digit.
- Press the MODE button to exit the Hz minimum programming screen and enter the total time programming screen. The total time TOT-T icon will blink. The currently selected time unit icon will be displayed. The current total time setting will be displayed and the left most (selected) digit will blink. The decimal is fixed and cannot be moved.
- Pressing the DIGIT button will increase the selected digit.
- Pressing the FIELD button will select a new the digit to the right or the time unit.
- Press the DIGIT button to increase the selected digit or time unit.
- Press the MODE button to exit the total time programming screen and enter the Hz maximum programming screen. The HZ icon will blink. A blinking ARROW will appear next to the word MAXIMUM. The current maximum Hz setting will be displayed and the left most (selected) digit will blink.

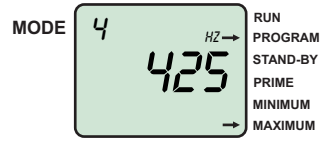

- Pressing the DIGIT button will increase the selected digit.
- Pressing the FIELD button will select a new the digit to the right.
- Press the DIGIT button to increase the selected digit.
- At the same time, press the RUN/STANDBY button and the MODE button. A blinking ARROW will point to the word RUN indicating the run mode has been activated.

6.7 Mode 5 - Pulse input (Batch) - In this mode, when the total number of accumulated pulses is equal to the programmed pulse input value (Hz) , the pump will run for the programmed on time.
Two values must be programmed:
1) **ON-T** = The amount of time the pump will run when accumulated pulses is equal to the programmed pulse input value (Hz).
2) **Hz maximum** = The number of input pulses that will trigger the batch.

- ***Set the pump for mode 5***. Press the MODE button until ***MODE 5*** is shown on the LCD display.
- ***Enter the programming mode.*** At the same time, press the RUN/STANDBY button and the MODE button. A blinking ARROW will point to the word PROGRAM indicating the program mode has been activated. The on time ON-T icon will blink. The currently selected time unit icon will be displayed. The current on time setting will be displayed and the left most (selected) digit will blink. The decimal is fixed and cannot be moved.

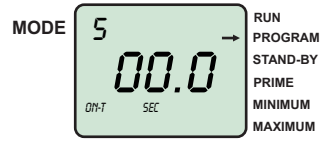

- Pressing the DIGIT button will increase the selected digit.
- Pressing the FIELD button will select a new the digit to the right or the time unit.
- Press the DIGIT button to increase the selected digit or time unit.
- Press the MODE button to exit the on time programming screen and enter the Hz (pulses per batch) programming screen. The HZ icon will blink. A blinking ARROW will appear next to the word MAXIMUM. The current Hz setting will be displayed and the left most (selected) digit will blink.

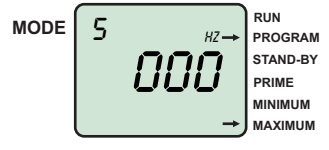

- Pressing the DIGIT button will increase the selected digit.
- Pressing the FIELD button will select a new the digit to the right.
- Press the DIGIT button to increase the selected digit.
- At the same time, press the RUN/STANDBY button and the MODE button. A blinking ARROW will point to the word RUN indicating the run mode has been activated.

7.0 How to Maintain the A-100NE

CAUTION: Proper eye and skin protection must be worn when installing and servicing the pump.

7.1 Routine Inspection and Maintenance

The A-100NE requires very little maintenance. However, the pump and all accessories should be checked weekly. This is especially important when pumping chemicals. Inspect all components for signs of leaking, swelling, cracking, discoloration or corrosion. Replace worn or damaged components immediately.

Cracking, crazing, discoloration and the like during the first week of operation are signs of severe chemical attack. If this occurs, immediately remove the chemical from the pump. Determine which parts are being attacked and replace them with parts that have been manufactured using more suitable materials. The manufacturer does not assume responsibility for damage to the pump that has been caused by chemical attack.

7.2 How to Clean and Lubricate the A-100NE

The A-100NE will require occasional cleaning and lubricating. The amount will depend on the severity of service.

- When changing the pump tube assembly, the pump head chamber, roller assembly and pump head cover should be wiped free of any dirt and debris.
- The pump head cover bearing may require grease periodically. Apply a small amount of grease (Aeroshell aviation grease #5 or equivalent) when necessary.
- Although not necessary, 100% silicon lubrication may be used on the roller assembly and tube assembly.
- Periodically clean the injection/check valve assembly, especially when injecting fluids that calcify such as sodium hypochlorite. These lime deposits and other build ups can clog the fitting, increase the back pressure and interfere with the check valve operation.
- Periodically clean the suction strainer.
- Periodically inspect the air vents located under the motor compartment and on the rear panel. Clean if necessary.

7.3 500 Hour Service Warning Timer

The A-100NE is equipped with a tube life warning timer. After approximately 500 hours of accumulated running time, the SERVICE icon will light. This is a reminder that the pump tube is nearing its minimum life expectancy and should be replaced. *Your actual tube life will depend on many factors such as the chemical used, back pressure, temperature, viscosity, and motor RPM.*

7.4 How to Replace the Pump Tube

The pump tube assembly will eventually break if not replaced. The tube has been designed for a minimum service life of 500 hours. However, the life of the tube is affected by many factors such as the type of chemical being pumped, the amount of back pressure, the motor RPM, temperature and others. The pump tube assembly must be inspected and replaced regularly.

After replacing the pump tube, press the Stand-by button and the Digit button <u>at the same time</u> to reset the tube life warning timer.

Remove the Old Pump Tube - The pump roller assembly spins in a counter clockwise direction. The pump head inlet (suction) side is located at the bottom of the pump and the outlet (discharge) is located at the top of the pump head.

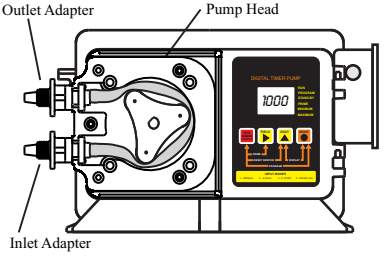

- Release any pressure that may be in the discharge tubing.
- Disconnect the suction and discharge tubes from the pump tube.
- Remove the pump head cover.
- With the pump running, pull the inlet fitting out of the pumphead. Guide the tube counter clockwise away from the rollers. Pull the outlet fitting out of the pump head.

Install the New Pump Tube - Be sure the pump head chamber is clean and free of any debris.

Remove and inspect the roller assembly. Be sure the rollers spin freely. If required, apply a small amount of grease to the pump head cover bearing.

- With the pump running, insert the inlet (suction) side of the Pump Tube fitting into the pump head.
- **Carefully** guide the Pump Tube into the pump head. Stretch the tube slightly and insert the outlet (discharge) fitting into the upper retaining slot in the pump head.
- Place the clear cover on the pump head and secure with three screws.

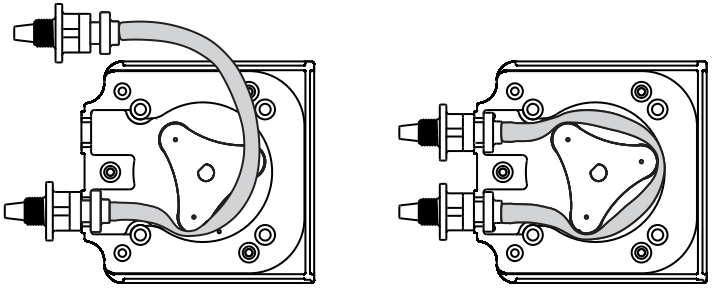

THIS PAGE BLANK

REPLACEMENT PARTS DRAWING

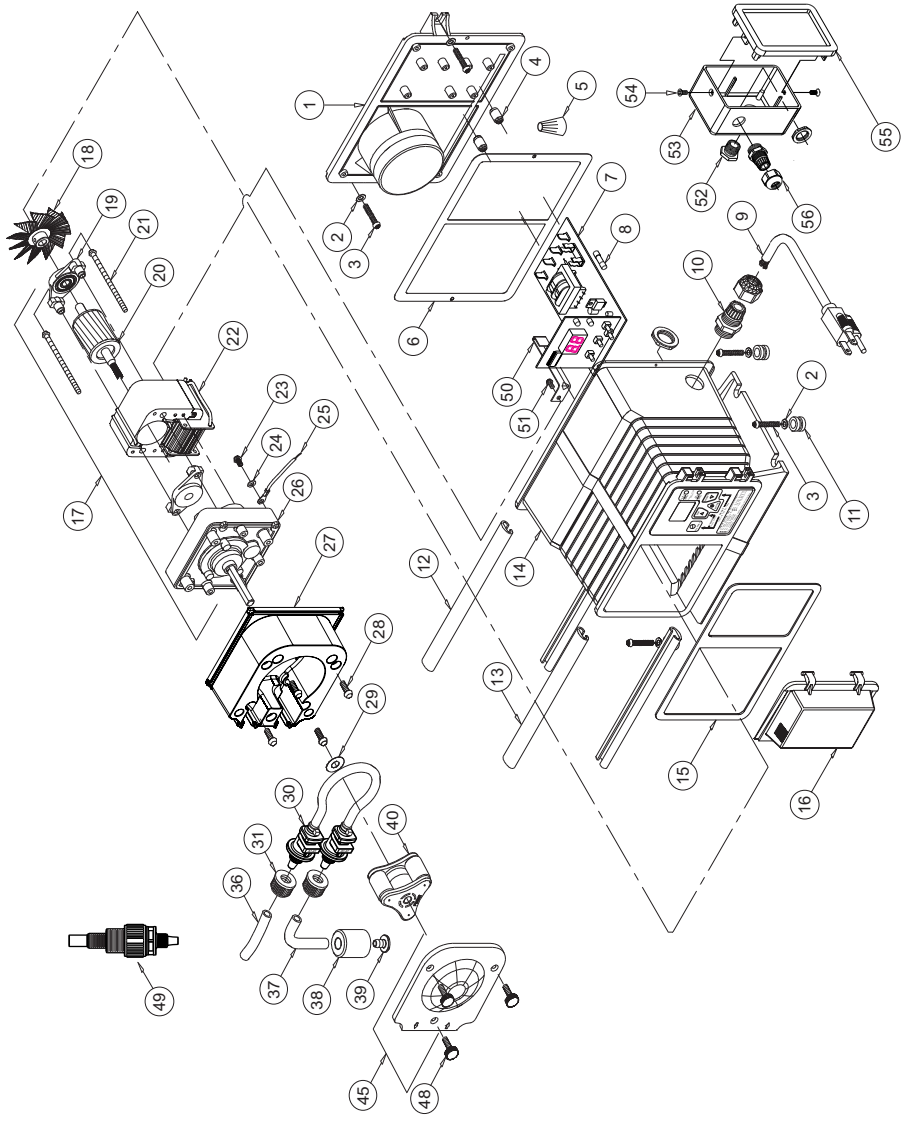

Item	Part No	Description	Qty
1	71000-214	Enclosure Back Plate With Gasket, Valox	1
2	90011-094	Washer, Mounting, #10 Stainless	2
3	90011-091	Mounting Screw, #10 X 1.0" Phillips Steel	4
4	76001-001	Tubing Spacer A-100N digital	2
5	90010-036	Wire Nut, Blue	1
6	90006-580	Gasket, Enclosure Back Plate	1
7	A-023N-E-115	Timer 115V w/ external control	1
	A-023N-E-220	Timer 220V w/ external control	1
	A-023N-E-230	Timer 230V w/ external control	1
8	90010-223	Fuse, Digital Timer, 2A 250VAC	1
9	71000-175	Power Cord, 115v60hz, Digital Models	1
	71000-176	Power Cord, 220v50hz, Digital Models	1
	71000-177	Power Cord, 230v60hz, Digital Models	1
10	70000-589	Cord Inlet Bushing	1
11	90003-559	Mounting Feet, Rubber	4
12	76001-000	Slide Clamp, Enclosure Rear	1
13	76000-999	Slide Clamp, Enclosure Front	1
14	76001-169	Enclosure A-100N Ext. Input	1
15	90006-579	Gasket, Enclosure Front	1
16	90002-191	Door, Electronic Controls Cover	1
17	70002-146	Gearmotor, 14 Rpm, 115v60hz	1
	70002-147	Gearmotor, 30 Rpm, 115v60hz	1
	70002-156	Gearmotor, 45 Rpm, 115v60hz	1
	70002-159	Gearmotor, 60 Rpm, 115v60hz	1
	70002-148	Gearmotor, 14 Rpm, 220v50hz	1
	70002-149	Gearmotor, 30 Rpm, 220v50hz	1
	70002-157	Gearmotor, 45 Rpm, 220v50hz	1
	70002-160	Gearmotor, 60 Rpm, 220v50hz	1
	70002-150	Gearmotor, 14 Rpm, 230v60hz	1
	70002-151	Gearmotor, 30 Rpm, 230v60hz	1
	70002-158	Gearmotor, 45 Rpm, 230v60hz	1
	70002-161	Gearmotor, 60 Rpm, 230v60hz	1
18	90006-581	Fan, Motor, 2.25" Diameter, Aluminum	1
19	C-612PB	Bearing Bracket With Bearing	2
20	C-616PN	Rotor 14RPM, 30RPM With Spacers	1
	C-616PN-32	Rotor 45RPM, 60RPM With Spacers	1
21	C-625	Screw, Motor, 14RPM, 30RPM Phil ST	2
	C-321-32	Screw, Motor, 45RPM, 60RPM Phil ST	2
22	71000-211	Stator 14, 30RPM, 115v Blu-White/Yell	1
	71000-213	Stator 14, 30RPM, 220v Brn-White/yell	1
	71000-212	Stator 14, 30RPM, 230v Red-White/Yellw	1

Item	Part No	Description	Qty
22	71000-466	Stator 45, 60RPM, 115v Blu-White/Yell	1
	71000-467	Stator 45, 60RPM, 220v Brn-White/yell	1
	71000-468	Stator 45, 60RPM, 230v Red-White/Yell	1
23	90011-024	Screw, Green Ground, 8-32 x .25	1
24	90011-078	Washer, Ground Screw, #8 Star	1
25	90010-222	Wire, Motor ground, Digital Timers, Green	1
26	A-008-1	Gearbox, 14 Rpm	1
	A-008-2	Gearbox, 30 Rpm	1
	A-008-3	Gearbox, 45 Rpm	1
	A-008-4	Gearbox, 60 Rpm	1
27	76001-009	Pumphead, no TFD sensors	1
	71000-488	Pumphead, w/TFD sensors	1
28	C-324N	Screw, 10-32 X .50 Phil Pan Black	4
29	A-031	Spacer, Rotor	1
30	A1-4T	Tube, A-100N S/A -4T Flex-A-Prene®	1
	A1-6T	Tube, A-100N S/A -6T Flex-A-Prene®	1
	A1-7T	Tube, A-100N S/A -7T Flex-A-Prene®	1
	A1-8T	Tube, A-100N S/A -8T Flex-A-Chem®	1
	A1-1T	Tube, A-100N S/A -1T Flex-A-Thane®	1
	A1-2T	Tube, A-100N S/A -2T Flex-A-Thane®	1
	A1-3T	Tube, A-100N S/A -3T Flex-A-Thane®	1
	A1-5T	Tube, A-100N S/A -5T Viton	1
31	C-330-6	Nut, Tube Compress Type, .37 O.D. Tubing	2
36	C-335-6	Tubing, Outlet, .37 O.D. X 5ft, Polyethylene	1
37	C-334-6	Tubing, Inlet, .37 O.D. X 5ft, Clear PVC	1
38	C-346	Weight, Inlet Tubing, Ceramic	1
39	C-342-6	Strainer, Inlet Tube, Polypropylene	1
40	71000-159	Roller Assembly -4, -6 tubes (white rollers)	1
	71000-350	Roller Assembly -7 tubes (black rollers)	1
45	71000-156	Cover, Pumphead With Sleeve Bearing	1
48	90011-160	Screw, Pumphead Cover, 8-32 X .62 Cap	3
49	A-014N-6A	Inj Valve Assy, .5-.25 MPT X .37OD Tube	1
50	90006-583	Motor Clip, 14RPM & 30RPM, SS	1
	90006-601	Motor Clip, 45RPM & 60RPM, SS	1
51	90011-146	Screw, Motor Clip, 8-32X.25 Phil, SS	1
52	90007-515	Bushing, Junction Box Connector, Alum.	1
53	76001-168	Junction Box A-100N Ext. Input, Valox	1
54	90011-129	Screw, Cover, 6-32X.25 Phil Pan SS Black	2
55	71000-133	Cover, Junction Box with Gasket and Label	1
56	90008-199	Connector Liquid-tight	1

LIMITED WARRANTY

Your new pump is a quality product and is warranted to be free of defects as set down in this policy. All parts, including rubberized goods, and labor are covered under warranty for 90 days from the date of purchase. Used peristaltic pump tube assemblies are not warranted. Parts, excluding rubberized goods, are covered under warranty for 12 months from the date of purchase.
Warranty coverage does not include damage to the pump that results from misuse, carelessness, abuse or alteration. Only the repair or the replacement of the pump is covered. Blue-White Industries does not assume responsibility for any other loss or damage.
Warranty status is determined by the pump's serial label and the sales invoice or receipt. The serial label must be on the pump and the pump must be accompanied by the sales invoice or receipt to obtain warranty coverage. The warranty status of the pump will be verified by Blue-White or a factory authorized service center.

Please be advised that although safety tested by independent testing laboratories, Caution - This Pump Has Been Evaluated For Use With Water Only. The Pump has also been tested by NSF International for use with 12-1/2% Sodium Hypochlorite only. ***Installers and operators of these devices must be well informed and aware of the precautions to be taken when injecting various chemicals -especially those considered hazardous or dangerous.***
Should it become necessary to return an injector for repair or service, you must attach information regarding the chemical used as some residue may be present within the unit which could be a hazard to service personnel.
Blue-White Industries will not be liable for any damage that may result by the use of chemicals with their injectors and it's components. Thank you.

PROCEDURE FOR IN WARRANTY REPAIR

Carefully pack the pump to be repaired. To assist in troubleshooting, please include the foot strainer and injection/check valve fitting if possible. Enclose a brief description of the problem as well as the original invoice or sales receipt showing the date of purchase. The receipt will be returned with the unit. Prepay all shipping costs. COD shipments will not be accepted. Warranty service must be performed by the factory or an authorized service center. Damage caused by improper packaging is the responsibility of the sender.



Users of electrical and electronic equipment (EEE) with the WEEE marking per Annex IV of the WEEE Directive must not dispose of end of life EEE as unsorted municipal waste, but use the collection framework available to them for the return, recycle, recovery of WEEE and minimize any potential effects of EEE on the environment and human health due to the presence of hazardous substances. The WEEE marking applies only to countries within the European Union (EU) and Norway. Appliances are labeled in accordance with European Directive 2002/96/EC.
Contact your local waste recovery agency for a *Designated Collection Facility* in your area.

AUTHORIZED SERVICE CENTERS

To find an authorized service center near you, please call Blue-White Industries at (714) 893-8529 or e-mail us at sales@blue-white.com

Blue-White®
Industries, Ltd.

5300 Business Drive
Huntington Beach, CA 92649
USA
Phone: 714-893-8529 **FAX:** 714-894-9492
E mail: sales@blue-white.com **or** techsupport@blue-white.com
Website: www.blue-white.com

 # 80000-358 **Rev.10 9/11/2019**