Blue-White® Industries, Ltd.

FLEXFLO® Peristaltic Metering Pumps

Engineering and Technical Data

A-100NV

Variable Speed

Digital Control

4-20mA, 0-10VDC & Pulse Inputs



TFD system Tube Failure Detection

Features:

- **Peristaltic pump design does not have valves that can clog requiring maintenance.**
- **Self priming - even against maximum line pressure. By-pass valves are not required. Cannot vapor lock or lose prime.**
- **Outputs to 5.17 GPH (19.56 LPH).**
- **Output pressures to 100 PSI (6.9 bar).**
- **Output volume is not effected by changes in back pressure.**
- **Patented pump tube design installs easily and stays centered on the rollers without manual adjustment.**
- **Two pump tubes supplied with each pump. No extra tubing required.**
- **Accepts 4-20mA, 0-10Vdc, and Pulse inputs for manual or external speed control.**
- **Operator friendly digital touch pad.**
  --Easy to read LCD display
  --Service and Alarm indicator icons.
  --Display motor speed or input signal values.
  --Prime mode for easy priming without changing programming.
- **Built-in Tube Failure Detection system (TFD). Senses chemical in the pump head, shuts off the pump and activates a 1 amp alarm relay (dry contact closure).**
- **Compatible with Blue-White's output flow verification sensor system.**
- **Durable housing of chemical resistant Valox (PBT) thermoplastic.**

Specifications:

Max. working pressure: .....100 psig (6.9 bar)
Max. fluid temperature: .....130° F (54° C)
Max. ambient temperature: .....14° to 110° F/ -10° to 43° C
Output adjustment range:
14 & 30 RPM with -1T, -2T, -4T tubes: 5-100% (20:1 turndown)
All other models: .....10-100% (10:1 turndown)
Duty cycle:.....Continuous
Maximum viscosity:.....5,000 Centipoise
Maximum suction lift: .....30 ft. Water 0 psig
Maximum Solids: .....50% by volume
Enclosure: .....NEMA 3R, (IP23)

Voltage (amp draw): .....115VAC/60Hz, 1ph (.350 amp max)
230VAC/60Hz, 1ph (.173 amp max)
220VAC/50Hz, 1ph (.175 amp max)
240VAC/50Hz, 1ph (.193 amp max)
Power Cord Plug Type:.....115V60Hz = NEMA 5/15 (USA)
230V60Hz = NEMA 6/15 (USA)
220V50Hz = CEE 7/VII (EUROPE)
240V50Hz = CEE 7/VII (EUROPE)
Approximate shipping wt: ...12 lb. (5.4 kg)

Materials of Construction:

Wetted components:

Pump Tube Assembly:.....Flex-A-Prene®, Flex-A-Chem®, Flex-A-Thane® or FKM tubing with PVDF connection fittings
Suction Tubing:.....Clear PVC
Suction Strainer:.....Natural Polypropylene
Discharge Tubing:.....Natural Polyethylene (LLDPE)
Injection/Check valve:
Body & insert: .....Polypropylene (optional PVDF)
Check Ball: .....Ceramic
Spring: .....Hastelloy C-276
Ball Seat O-ring:.....TFE/P (optional EP)
Static Seal O-ring:.....FKM (optional EP)

Non-Wetted components:

Pump Head & Enclosure: .....Valox® (PBT) thermoplastic
Pump Head Cover:.....Clear Acrylic
Cover Screws:.....300 Stainless, Polypropylene cap
Roller Assembly:
Rotor:.....Valox® (PBT)
Rollers: .....Nylon
Roller Bearings: .....Bronze
Motor Shaft:.....Nickel plated steel
TFD System Sensor pins: ....Hastelloy C-276
Power Cord: .....3 conductor, SJTW-A Water-resistant

Blue-White® Industries, Ltd.

FLEXFLO® Peristaltic Metering Pumps

Dimensions:

Base Mounting

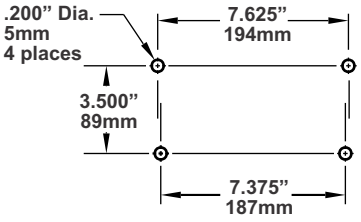

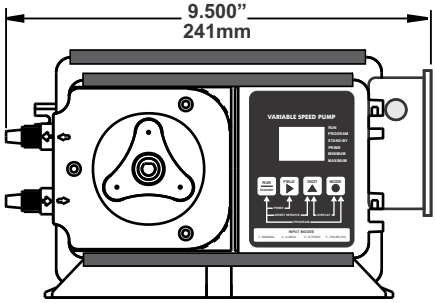

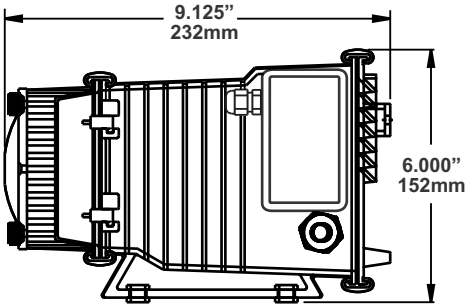

Rear Panel Mounting

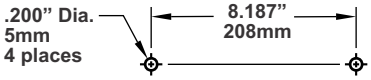

Model Number Matrix:

MODEL A1N [ ][ ][V] - [ ][ ] - [ ]

Maximum Motor RPM
- **0** = 14 RPM
- **1** = 30 RPM
- **2** = 45 RPM
- **3** = 60 RPM

Power Supply
- **0** = 115V60Hz
- **1** = 220V50Hz
- **2** = 230V60Hz
- **8** = 240V50Hz AS 3112 (Australia/New Zealand)
- **9** = 230V50Hz BS 1363 (UK)

Output Control
- **V** = Digital speed control with external input
- **F** = Analog speed control
- **E** = Digital batch timer with external input
- **A** = Analog timer, 60 sec. Cycle - 100% duty
- **C** = Analog timer, 5 sec. Cycle - 100% duty
- **S** = Analog timer, 60 sec. Cycle - 10% duty
- **X** = No output control - fixed feed rate

Miscellaneous Options (not required)
- **1** = TI40-6V injector replaces A-014N-6A
- **2** = C-340V footvalve replaces C-342-6 strainer
- **5** = A-014NK-6A injector PVDF
- **6** = Jumper set for digital square wave input
- **T7** = 7 gallon chemical tank system
- **T15** = 15 gallon chemical tank system
- **T30** = 30 gallon chemical tank system
- **X** = NSF61 certified (ships without accessories)

Tubing Connection Type
- **T** = Compression tube nuts

Pump Tube Size and Material
- **1** = 1/4" OD Flex-A-Thane®
- **2** = 3/8" OD Flex-A-Thane®
- **3** = 7/16" OD Flex-A-Thane®
- **4** = 1/4" OD Flex-A-Prene®
- **5** = 5/16" OD FKM
- **6** = 3/8" OD Flex-A-Prene®
- **7** = 7/16" OD Flex-A-Prene®
- **8** = 7/16" OD Flex-A-Chem®

Maximum Flow rate and pressure capacities:

Tube no.	Tubing Material	14 RPM MODELS					30 RPM MODELS					45 RPM MODELS					60 RPM MODELS				
		ml/m	oz/m	lph	gph	PSI(bar)	ml/m	oz/m	lph	gph	PSI(bar)	ml/m	oz/m	lph	gph	PSI(bar)	ml/m	oz/m	lph	gph	PSI(bar)
1	Flex-A-Thane®	15	0.51	0.90	0.24	65(4.5)	35	1.18	2.10	0.55	65(4.5)	54	1.83	3.24	0.86	65(4.5)	67	2.26	4.02	1.06	65(4.5)
2	Flex-A-Thane®	32	1.08	1.92	0.51	65(4.5)	75	2.54	4.50	1.19	65(4.5)	115	3.89	6.90	1.82	65(4.5)	140	4.73	8.40	2.22	65(4.5)
3	Flex-A-Thane®	73	2.47	4.37	1.16	50(3.5)	173	5.85	10.38	2.74	50(3.5)	261	8.82	15.66	4.14	50(3.5)	326	11.01	19.56	5.17	50(3.5)
4	Flex-A-Prene®	6	0.20	0.36	0.10	100(6.9)	13	0.44	0.78	0.21	100(6.9)	21	0.71	1.26	0.33	100(6.9)	25	0.85	1.50	0.40	75(5.2)
5	FKM	11	0.37	0.66	0.17	25(1.7)	26	0.88	1.56	0.41	25(1.7)	39	1.31	2.34	0.62	25(1.7)	48	1.62	2.88	0.76	25(1.7)
6	Flex-A-Prene®	18	0.61	1.08	0.29	100(6.9)	42	1.42	2.52	0.67	100(6.9)	63	2.13	3.78	1.00	100(6.9)	79	2.67	4.74	1.25	75(5.2)
7	Flex-A-Prene®	57	1.92	3.42	0.90	50(3.5)	138	4.66	8.28	2.19	50(3.5)	200	6.76	12.00	3.17	50(3.5)	250	8.45	15.00	3.96	50(3.5)
8	Flex-A-Chem®	40	1.35	2.40	0.63	50(3.5)	84	2.80	5.04	1.31	50(3.5)	140	4.73	8.40	2.22	50(3.5)	180	6.10	10.80	2.85	50(3.5)

Gallons shown are U.S. Gallons

Replacement Pump Tubes:

Pump Model Number Suffix	Pump Tube Part Number	Pump Tube Material	Nominal Pump Tube OD
-1T	A1-1T	Flex-A-Thane®	1/4" (6,4mm)
-2T	A1-2T	Flex-A-Thane®	3/8" (9,5mm)
-3T	A1-3T	Flex-A-Thane®	7/16" (11,1mm)
-4T	A1-4T	Flex-A-Prene®	1/4" (6,4mm)
-5T	A1-5T	FKM	5/16" (7,9mm)
-6T	A1-6T	Flex-A-Prene®	3/8" (9,5mm)
-7T	A1-7T	Flex-A-Prene®	7/16" (11,1mm)
-8T	A1-8T	Flex-A-Chem®	7/16" (11,1mm)

Blue-White® Industries, Ltd.
5300 Business Drive, Huntington Beach, CA 92649
Tel: 714-893-8529 **Fax:** 714-894-9492
www.blue-white.com **Email:** sales@blue-white.com

All trademarks are the property of their respective owners.

Technical data sheet #85000-040 rev 5 20180807