CHEM-FEED®

INJECTOR

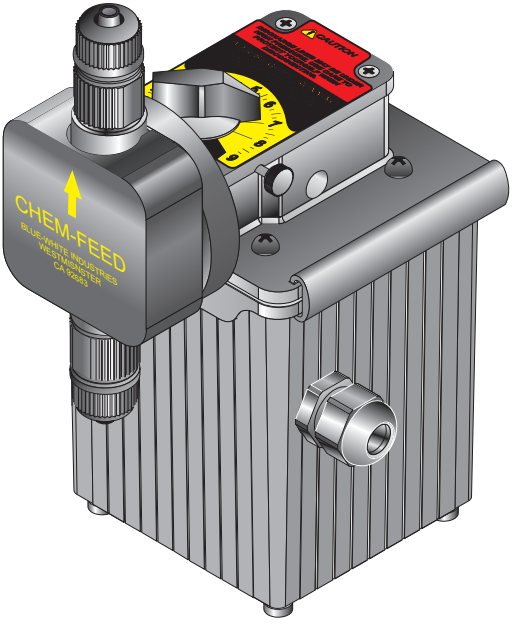

MODEL C-1500N

Blue-White®
Industries, Ltd.

5300 Business Drive
Huntington Beach, CA 92649
USA
Phone: 714-893-8529 **FAX:** 714-894-9492
E mail: sales@blue-white.com **or** techsupport@blue-white.com
www.Blue-White.com

TABLE OF CONTENTS

SECTION	HEADING	PAGE
1	Introduction	2
2	Specifications	2
3	C-1500N Features	3
4	How to install the C-1500N	3
4.1	Mounting location	3
4.2	Electrical connections	5
4.3	How to install the tubing and fittings	6
5	How to operate the C-1500N	8
5.1	Adjusting the Pump Output - Standard Models	8
5.2	Adjusting the Pump Output - Fixed cycle timer Models	9
5.2	Measuring the pump's output - volumetric test	9
6	How to maintain the C-1500N	9
6.1	Routine inspection and cleaning	9
6.2	How to clean the C-1500N	9

1.0 Introduction

Thank you for purchasing the C-1500N positive displacement metering pump. The C-1500N is designed to inject chemicals into piping systems. All models are equipped with a top mounted mechanical flow rate adjustment knob. Optional on/off cycling timers are available.

The pump has been tested by NSF International for use with 12-½% Sodium Hypochlorite.

CAUTION: This pump has been evaluated by ETL Intertek Testing Services for use with water only. The factory performance tests the pump with water only.

2.0 Specifications

Maximum Working Pressure	125 psig / 8.6 bar*
Maximum Fluid Temperature	130° F / 54°C
Output Accuracy	+/- 10% of maximum (water @ 70°F, 0 psig, and 5' suction lift)
Ambient Temperature Range	14 to 110°F / -10 to 43°C
Enclosure	NEMA 3R (IP 23) acceptable for outdoor use
Duty Cycle	Continuous
Maximum Viscosity	1,000 Centipoise
Maximum Suction Lift	up to 10 ft. water
Power Requirements	115V60Hz 45 Watts 220V50Hz 45 Watts 230V60Hz 45 Watts 24V60Hz 45 Watts
Dimensions	9-1/16" high x 4-1/2" wide x 5-3/4" deep
Weight	7 lb.
Pollution degree	2
Installation Category	II
Altitude	6562 ft / 2000 m
Humidity	80% to temperatures up to 87.8°F / 31°C (decreasing linearly to 50% rH at 104°F / 40°C; max 80% rH, non condensing.

3.0 C-1500N Features

- Double-ball ceramic check valves.
- PVDF (Kynar) valve assemblies.
- Viton o-rings.
- High outlet pressure capability of 125 PSIG.*
- Easy access, top mounted mechanical feed rate adjustment.
- Ball bearing supported motor drive shaft.
- Permanently lubricated ball bearing motor.
- 20:1 adjustment turn down ratio.
- Acceptable for outdoor use. (NEMA 3R; IP23)
- Corrosion resistant Valox housing.
- Easy servicing.
- Includes suction tube foot valve & strainer, suction tube weight, suction tubing, discharge tubing and injection fitting with internal back-flow check valve and mounting hardware. * Most models.

4.0 How To Install the C-1500N

CAUTION **Proper eye and skin protection must be worn when installing and servicing the pump.**

Note: *All diagrams are strictly for guideline purposes only. Always consult an expert before installing the C-1500N into specialized systems. The C-1500N should be* ***serviced by qualified persons only.***

4.1 Mounting Location

Choose an area located near the chemical supply tank, chemical injection point and electrical supply. Although the pump is designed to withstand outdoor conditions, a cool, dry, well ventilated location is recommended. Install the pump where it can be easily serviced.

- Mount the pump to a secure surface or wall using the enclosed hardware. Wall mount to a solid surface only. Mounting to drywall with anchors is not recommended.
- Keep the outlet (discharge) tubing as short as possible. Longer tubing increases the back pressure at the pump tube.
- Do not mount the pump directly over your chemical container. Chemical fumes may damage the unit. Mount the pump off to the side or at a lower level than the chemical container.
- Mounting the pump lower than the chemical container will gravity feed the chemical into the pump. This “flooded suction” installation can reduce the time required to prime the pump. Install a shut-off valve, pinch clamp or other means to halt the gravity feed to the pump during servicing.
- Your solution tank should be sturdy. Keep the tank covered to reduce fumes.
- Be sure your installation does not constitute a cross connection with the drinking water supply. Check your local plumbing codes.

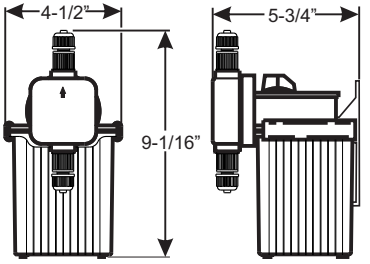

FIG. 4.0 DIMENSIONAL DRAWING

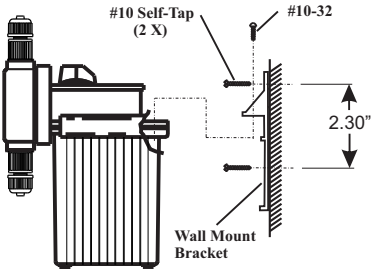

FIG. 4.1 INJECTOR WALL MOUNTING

CAUTION **To prevent chemical overdosing, a flow switch is recommended on the circulation system to automatically stop chemical feed when there is no return flow to the swimming pool or spa.**

WARNING **Risk of chemical overdose. Be certain the pump does not overdose chemical during backwash and periods of no flow in the circulation system.**

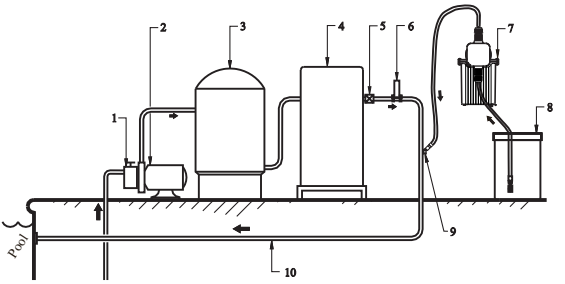

1. Strainer
2. Circulation Pump
3. Filter
4. Heater
5. Check Valve
6. Flowmeter
7. Injector Blue-White® F-300
   Blue-White® C-1500N
8. Solution Tank
9. Injection Fitting
10. Return Line

FIG. 4.2 SWIMMING POOL INSTALLATION

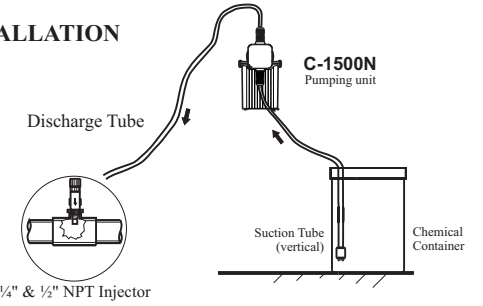

FIG. 4.3 TYPICAL INSTALLATION

4.2 Installation Instructions for the Electrical Connections

4.2.1 Input Power Connections

WARNING

SHOCK

Risk of electric shock. Be certain to connect the pump to the proper supply voltage. Using the incorrect voltage will damage the pump and may result in injury. The voltage requirement is printed on the pump serial label.

Note: *When in doubt regarding your electrical installation, contact a licensed electrician.*

The C-1500N is supplied with a ground wire conductor and a grounding type attachment plug (power cord) or a junction box for field wiring.

POWER CORD MODELS -To reduce the risk of electric shock, be certain that the power cord is connected only to a properly grounded, grounding type receptacle.

TIMER BOX MODELS -To reduce the risk of electric shock, be certain that a grounding conductor is connected to the green grounding conductor located in the junction box.

MOTOR LEADWIRES

INPUT VOLTAGE	HOT LEADWIRE	NEUTRAL LEADWIRE	GROUND LEADWIRE	SIZE	TEMP
115V 60Hz	BLACK or YELLOW *	BLUE	GREEN	18AWG	105°
220V 50Hz	BLUE or YELLOW *	BROWN	GREEN	18AWG	105°
230V 60Hz	BLACK or YELLOW *	RED	GREEN	18AWG	105°
24V 60Hz	BLUE *	WHITE	GREEN	18AWG	105°

* Yellow leadwire : thermally protected motor
Black or Blue leadwire: standard impedance protected motor

FIG. 4.4 WIRING DIAGRAM - STANDARD MODELS

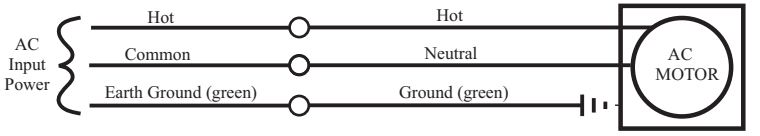

CAUTION

To prevent chemical overdosing, disconnecting power to the circulation system must also disconnect power to the pump.

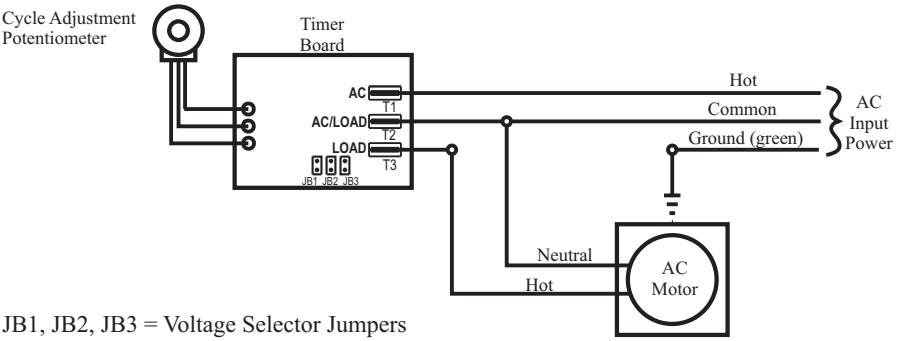

JB1, JB2, JB3 = Voltage Selector Jumpers
Jumpers Configuration
Install JB2 & JB3, (JB1 left open) = 24 V AC input
Install JB1 & JB3, (JB2 left open) = 115 V AC input (factory Setting)
Remove all jumpers (JB1, JB2, & JB3 left open) = 220V, 230 V AC input

FIG. 4.5 WIRING DIAGRAM - FIXED TIMERS

4.3 How to Install the Tubing and Fittings

CAUTION **Proper eye and skin protection must be worn when installing and servicing the pump.**

4.3.1 Inlet Tubing - Locate the inlet fitting of the pump head, see fig 4.6. Remove the tube nut. Push the clear PVC suction tubing onto the compression barb of the fitting. Use the tube nut to secure the tube. Hand tighten only.

4.3.2 Footvalve/Strainer -Trim the inlet end of the suction tubing so that the strainer will rest in a vertical position, approximately one inch from the bottom of the solution tank. This will prevent sediment from clogging the strainer. Loss of prime may occur if the footvalve is permitted to lay on the bottom of the solution tank in a horizontal position. Slip the ceramic weight over the end of the suction tube. Press the footvalve/strainer into the end of the tube. Secure the ceramic weight to the strainer. Drop the strainer into the solution tank.

4.3.3 Outlet Tubing - Locate the outlet fitting of the pump head, see fig 4.6. Remove the tube nut. Push the opaque outlet (discharge) tubing onto the compression barb of the fitting. Use the tube nut to secure the tube. Hand tighten only.

Trim the other end of the outlet tube leaving only enough slack to connect it to the Injection/Check valve Fitting (see below). Increasing the length of the outlet tube increases the back pressure at the pump head, particularly when pumping viscous fluids.

Keep the inlet and outlet tubes as short as possible.

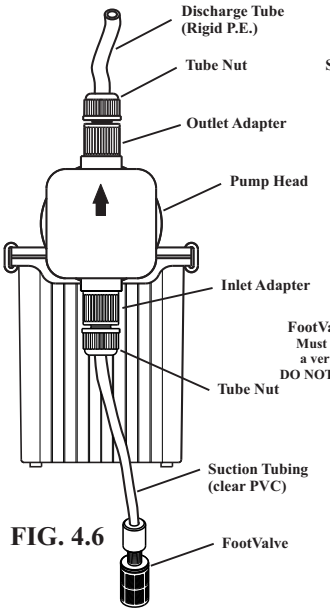

FIG. 4.6

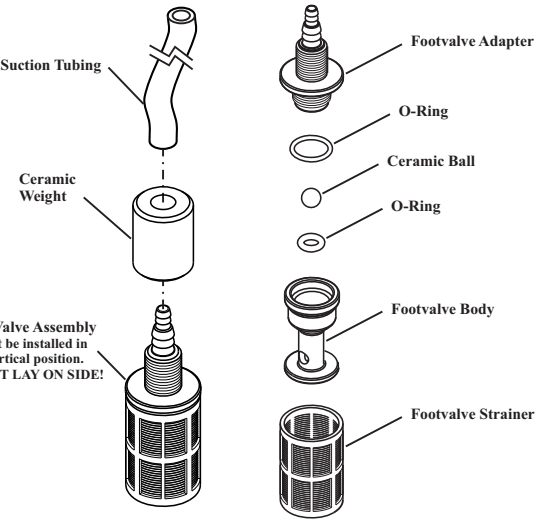

FIG. 4.7 FOOTVALVE ASSY.

4.3.4 Injection/Check Valve Fitting Installation - The Injection/Check valve fitting is designed to install directly into either 1/4" or 1/2" female pipe threads.

Install the Injection/Check valve directly into the tee fitting. Do not install the fitting into a pipe stud and then into the tee. The solution must inject directly into the flow stream.

Use PTFE thread sealing tape on the pipe threads. Push the opaque outlet (discharge) tubing onto the compression barb of the Injection/Check valve fitting. Use the tube nut to secure the tube. Hand tighten only.

Injection/Check valve fitting fitting will require periodic cleaning, especially when injecting fluids that calcify such as sodium hypochlorite. These lime deposits and other build ups can clog the fitting increasing the back pressure and interfering with the check valve operation. See section 6.0.

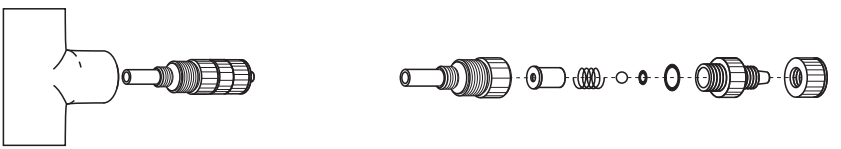

FIG. 4.8
INJECTION/CHECK VALVE
TEE INSTALLATION AND EXPLODED VIEW

5.0 How To Operate The C-1500N

5.1 Adjusting the Pump Output- Standard models (fig. 5.1) - The C-1500N flow rate can be adjusted within a range of 5% -100% of maximum output (20:1 turndown ration) by means of a mechanical, cam type mechanism. The mechanism adjusts the pump's stroke length to an infinite number of settings within the flow range. Because the pump's output is reduced by increasing the pressure of the system being injected into, the amount of suction lift, and the viscosity of the fluid being injected, the pump must be over-sized to allow for these factors. Sizing the pump to allow adjustment within the midrange is preferred to maintain accuracy. Consult the factory for individual pump model output curve data.

To **adjust the pump's output**:

1. With the pump running, loosen the set screw.

2. Turn the adjustment knob to the desired setting.

3. Re-tighten the set screw.



FIG. 5.1

5.2 Adjusting the Pump Output - DELUXE Models (fig. 5.2)

In addition to the cam type mechanism adjustment (section 5.1), the pump output of the C-1500N deluxe unit equipped with an optional electronic cycle timer board can also be fine tuned by adjusting the timer adjustment knob. The total-time cycle is factory preset and is not user adjustable. The on-time cycle is adjustable from 5% to 100% of the total cycle time. Example: If the total-time cycle is 5 seconds and the on-time cycle is adjusted for 20 percent, the pump will run for 1 second and turn off for 4 seconds (5 second total cycle). This cycle is repeated until either the cycle time is changed or the input power is disconnected from the pump.

Note: When the input power is disconnected from the C-1500N, the unit will maintain the last adjusted settings. When power is restored to the pump, the C-1500N will begin to pump using the last time cycle setting.

To **adjust the On-Time :**

Turn the timer adjustment knob located on the junction box cover.

Clockwise increases the time on.

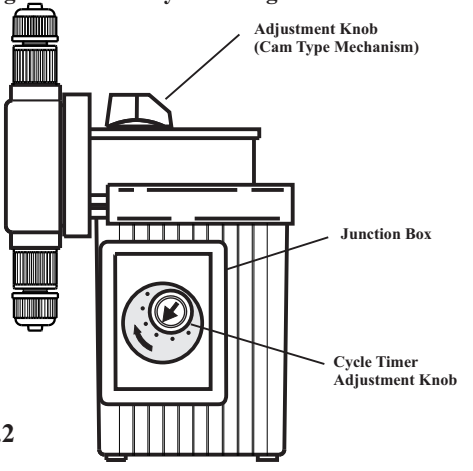

FIG. 5.2

5.3 Measuring the Pump's Output - Volumetric Test.

This volumetric test will take into account individual installation factors such as line pressure, fluid viscosity, suction lift, etc. This test is the most accurate for measuring the injector's output in an individual installation.

1. Be sure the Injection Fitting and Footvalve/Strainer is clean and working properly.

2. With the injector installed under normal operating conditions, place the Footvalve/Strainer in a large graduated cylinder.

3. Fill the graduated cylinder with the solution to be injected and run the injector until all air is removed from the suction line and the solution enters the discharge tubing.

4. Refill the graduated cylinder, if necessary, and with the Footvalve completely submerged in the solution, note the amount of solution in the graduated cylinder.

5. Run the injector for a measured amount of time and note the amount of fluid injected. A longer testing time will produce more accurate results.

6.0 How to Maintain the C-1500N

⚠ CAUTION **Proper eye and skin protection must be worn when installing and servicing the pump.**

6.1 Routine Inspection and Maintenance

The C-1500N requires very little maintenance. However, the pump and all accessories should be checked regularly. This is especially important when pumping chemicals. Inspect all components for signs of leaking, swelling, cracking, discoloration or corrosion. Replace worn or damaged components immediately. Cracking, crazing, discoloration and the like during the first week of operation are signs of severe chemical attack. If this occurs, immediately remove the chemical from the pump. Determine which parts are being attacked and replace them with parts that have been manufactured using more suitable materials. The manufacturer does not assume responsibility for damage to the pump that has been caused by chemical attack.

6.2 How to Clean the C-1500N

The C-1500N will require occasional cleaning, especially the Injection fitting, the Footvalve/Strainer, and the pump head valves. The frequency will depend on the type and severity of service..

- When changing the diaphragm, the pump head chamber and pump head cover should be wiped free of any dirt and debris.

- Periodically clean the injection/check valve assembly, especially when injecting fluids that calcify such as sodium hypochlorite. These lime deposits and other build ups can clog the fitting, increase the back pressure and interfere with the check valve operation. See section 4.3.4. Fig. 4.8.

- Periodically clean the suction strainer. Fig.4.7

- Periodically inspect the air vents located under the motor compartment and under the pump head. Clean if necessary.

Replacement Parts Drawing

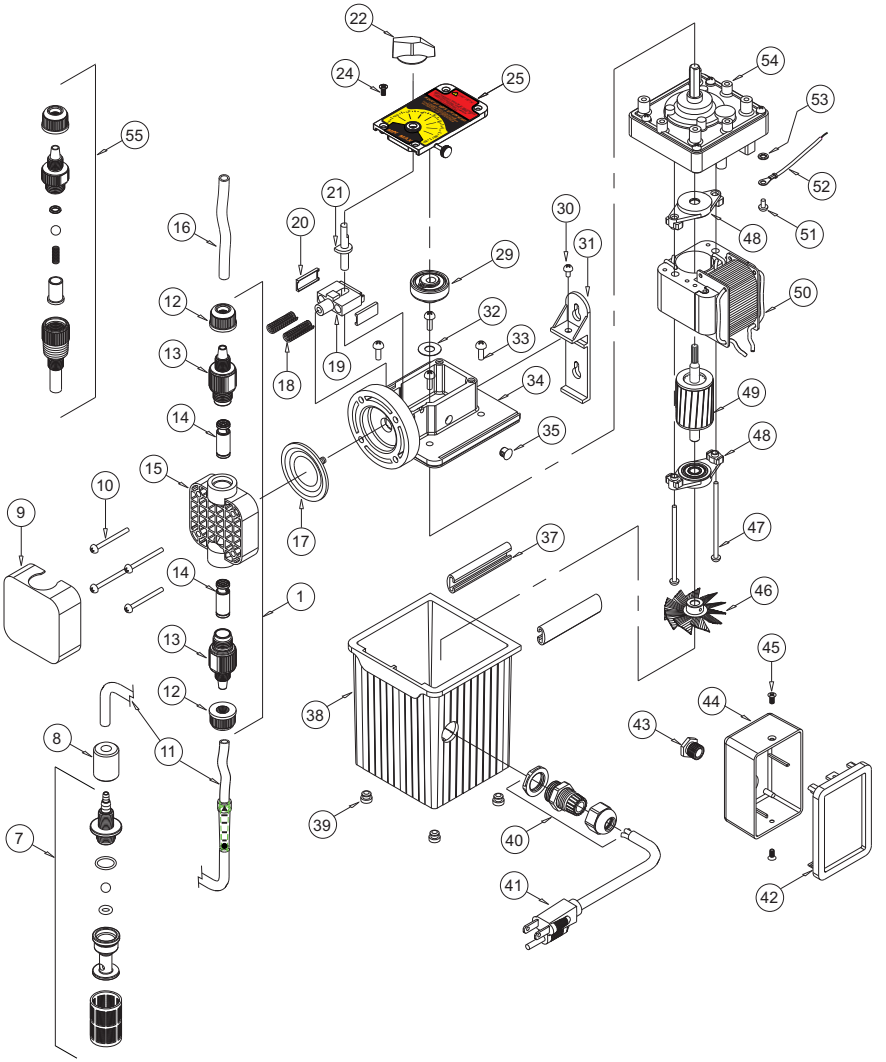

C-1500N PARTS LIST

Item	Part No	Description	Qty
1	C-535A6-6	Pumphead Kit, HDN Viton	1
	C-535A6-6E	Pumphead Kit, HDN EP	1
7	C-340A	FootValve S/A, Aflas	1
	C-340E	FootValve S/A, EP	1
8	C-346	Ceramic weight	1
9	C-535FC	Cover P/Head, HD Chem-Feed logo	1
	C-535F	Cover P/Head, HD Noir logo	1
	S-535F	Cover P/Head, HD Micro logo	1
10	C-504HD	Screw 10-32 x 1.25	4
11	70000-638	Tube Indicator Glass 3/8 x 5FT	1
	C-334-4	Tube Suction 1/4 x 5FT	1
12	C-330-4	Tube Nut, .25T, PVDF	2
	C-330-6	Tube Nut, .37T, PVDF	2
13	C-560-6V	Adapter S/A Bullet .37T Viton	2
	C-560-6E	Adapter S/A Bullet .37T EP	2
	C-560-6S	Adapter S/A Bullet .37T Silicon	2
	C-560-4V	Adapter S/A Bullet .25T Viton	2
	C-560-4E	Adapter S/A Bullet .25T EP	2
	71000-227	Adapter S/A Bullet .25T Silicon	2
14	71000-195	Cartridge Bullet Valve S/A, Double-Ball	2
15	90002-146	P/Head Noir Molded, P.P.	1
16	C-335-6	Tubing D/Charge, 3/8 x 5FT	1
	C-335-4	Tubing D/Charge, 1/4 x 5FT.	1
17	C-406VT-15N	Diaphragm S/A 2.0 15N, Viton/TFE	1
	C-406T-15N	Diaphragm S/A 2.0 15N, EP/TFE	1
	R-106VT-15N	Diaphragm S/A 1.6 15N, Viton/TFE	1
	R-106T-15N	Diaphragm S/A 1.6 15N, EP/TFE	1
18	C-1514N	Return Spring	2
19	76000-172	Stirrup	1
20	C-1504	Slide Bearing	2
21	90001-132	Offset Cam #1 .125”	1
	R-1505N	Offset Cam #2 .055”	1
	C-1505N-3	Offset Cam #3 .187”	1
	90001-141	Offset Cam #4 .100”	1
22	C-1502	Dial Knob	1
24	90011-168	Screw #6 x .62 PH oval ‘A’	4
25	C-1503N-3	Top Cover Assembly with bearing	1
29	C-1507A	Drive Cam S/A #1 .125”	1
	R-1507A	Drive Cam S/A #2 .055”	1
	C-1507-3A	Drive Cam S/A #3 .187”	1
	C-1507-4A	Drive Cam S/A #4 .100”	1

Item	Part No	Description	Qty
30	C-624N	Screw 10-32 x .50 PHL PAN	1
31	90002-106	Bracket Wall Mount	1
32	90011-014	Spacer, Rotor	1
33	C-624N	Screw 10-32 x .50 PHL PAN	4
34	C-1501N	Motor Mount, Large Diaphragm	1
	C-1501N-S	Motor Mount, Small Diaphragm	1
35	90008-138	Plug .312 Hole Black	1
36	90006-597	Gasket, Motor Mount	1
37	C-628NG	Slide Clamp	2
38	C-1501NR	Motor Cover for power cord models	1
	C-1508PN-2	Motor cover for junction box models	1
39	C-1517	Bumper Feet	4
40	A-033N	Connector Liq-Tite w/nut	1
41	C-1523UL	Cord 18/3 SJTW/A 115V, U.S., NEMA 5/15 plug	1
	90010-128	Cord 18/3 SJTW/A 220V, Euro, CEE 7/VII (A) plug	1
	C-823-230	Cord 18/3 SJTW/A 230V, U.S., NEMA 6/15 plug	1
42	C-052	Cover, Junction Box with Gasket and Label	1
43	C-649	Bushing, Junction Box Connector, Alum.	1
44	76000-522	Junction Box, Valox	1
45	F-7013	Screw, Cover, 6-32 X .25 Phil Pan SS Black	2
46	90006-598	Fan, 1.80” Diameter, Alum.	1
47	C-625	Screw, Motor, 8-32 X 2.5” Phillips Steel	2
48	C-612PB	Bearing Bracket With Bearing	2
49	C-616PN	Rotor Assembly With Shaft And Spacers	1
50	70000-018	Stator S/A, 115V60Hz Standard Blue-Black	1
	70000-019	Stator S/A, 115V60Hz Thermal Brown-Blue	1
	71000-019	Stator S/A, 220V50Hz Standard Brown-Black	1
	71000-020	Stator S/A, 220V50Hz Thermal Brown-Yellow	1
	70000-020	Stator S/A, 230V60Hz Standard Red-Black	1
	70000-021	Stator S/A, 230V60Hz Thermal Red-Yellow	1
	C-615P-4	Stator S/A, 24V60Hz Standard Blue-White	1
51	90011-024	Ground Screw 8-32 x .25 Hex SL ST	1
52	90010-127	Lead Wire, ground, Green	1
53	90011-078	Washer, Ground Screw, #8 Intrl/Star	1
54	C-618N-14	Gearbox, 14 RPM	1
	C-618N-30	Gearbox, 30 RPM	1
	C-618N-45	Gearbox, 45 RPM	1
	C-618N-60	Gearbox, 60 RPM	1
	C-618N-125	Gearbox, 125 RPM	1
	C-618N-250	Gearbox, 250 RPM	1
55	70000-439	Injection Valve S/A 37T VIT 1/2 PSI	1
(N/s)	90010-153	Cycle Timer 5 Sec. 24V-115V-230V 50/60 Hz	1
(N/s)	90010-151	Cycle Timer 1 Min. 24V-115V-230V 50/60 Hz	1



Users of electrical and electronic equipment (EEE) with the WEEE marking per Annex IV of the WEEE Directive must not dispose of end of life EEE as unsorted municipal waste, but use the collection framework available to them for the return, recycle, recovery of WEEE and minimize any potential effects of EEE on the environment and human health due to the presence of hazardous substances. The WEEE marking applies only to countries within the European Union (EU) and Norway. Appliances are labeled in accordance with European Directive 2002/96/EC.
Contact your local waste recovery agency for a *Designated Collection Facility* in your area.

LIMITED WARRANTY

Your new pump is a quality product and is warranted to be free of defects as set down in this policy. All parts, including rubberized goods, and labor are covered under warranty for 90 days from the date of purchase. Used peristaltic pump tube assemblies are not warranted. Parts, excluding rubberized goods, are covered under warranty for 12 months from the date of purchase.
Warranty coverage does not include damage to the pump that results from misuse, carelessness, abuse or alteration. Only the repair or the replacement of the pump is covered. Blue-White Industries does not assume responsibility for any other loss or damage.
Warranty status is determined by the pump's serial label and the sales invoice or receipt. The serial label must be on the pump and the pump must be accompanied by the sales invoice or receipt to obtain warranty coverage. The warranty status of the pump will be verified by Blue-White or a factory authorized service center.

Please be advised that although safety tested by independent testing laboratories, Caution - This Pump Has Been Evaluated For Use With Water Only. ***Installers and operators of these devices must be well informed and aware of the precautions to be taken when injecting various chemicals -especially those considered hazardous or dangerous.*** Should it become necessary to return an injector for repair or service, you must attach information regarding the chemical used as some residue may be present within the unit which could be a hazard to service personnel. Blue-White Industries will not be liable for any damage that may result by the use of chemicals with their injectors and it's components. Thank you.

PROCEDURE FOR IN WARRANTY REPAIR

Carefully pack the pump to be repaired. To assist in troubleshooting, please include the foot strainer and injection/check valve fitting if possible. Enclose a brief description of the problem as well as the original invoice or sales receipt showing the date of purchase. The receipt will be returned with the unit. Prepay all shipping costs. COD shipments will not be accepted. Warranty service must be performed by the factory or an authorized service center. Damage caused by improper packaging is the responsibility of the sender.

ARKANSAS
BT Environmental, Inc
Bill Thomason
225 Castleberry Street
Hot Springs, AR 71901
501-624-3837

CALIFORNIA (NORTHERN)
Howard E. Hutching company
(Repair Center)
7190 Penryn Plaza
Penryn, CA 95663
800-568-3958

Swimco Electric Co.
753 Camden Avenue
Campbell, CA 95008
408-378-2607

CALIFORNIA (SOUTHERN)
Blue-White Industries
(Repair Center)
5300 Business Drive
Huntington Bch. CA 92649
714-893-8529

COLORADO
Denver Winpump
5754 Lamer ave
.Arvada, CO 80002
303-424-3551

CONNECTICUT
Cronin-Cook & Associates
24 West Road
Vernon, CT 06029
860-875-0544

Rice Pump & Motor Repair
5740 Powerline Road
Ft. Lauderdale FL 33309
954-776-6049

American Pump
7580-A W. Tennessee St.
Tallahassee, FL 32304
850-575-9618

Jerry Lee Chemical Co.
3407 W. Old Fairfield Drive
Pensacola, FL 32505
904-432-9929

Picard Chemical
1670 S. Congress Avenue
W. Palm Beach, FL 33406
561-965-3434

ILLINOIS
Mullarkey Associates
(Repair Center)
12346 S. Keeler Ave.
Alsip, IL 60658
708-597-5558

MARYLAND
Century Pool Service, Inc
5020 Nicholson Court, #201
Kensington, MD 20895
301-231-8999

NEW YORK
Sherwood Specialties, Inc.
875 Atlantic Ave. 'B'
Rochester, NY 14609
585-546-1211

NORTH CAROLINA
Southern Industrial Sales
1903 Herring Avenue
Wilson, NC 27893
800-872-7665

SOUTH DAKOTA
Son-Aqua Distributing
Jim Robinson
2447 W. Main Street
Rapid City, SD 57702
605-343-7716

TENNESSEE
Rock City Machine
307 3rd Avenue South
Nashville, TN 37201
615-244-1371

TEXAS
Alamo Water Refiners
13700 Hwy. 90 West
San Antonio, TX 78245
210-677-8400

Shelter's Water Refining
Robert Shelton
2708 E. Randol Mill Rd.
Arlington, TX 76011
817-640-6188