Blue-White® Industries, Ltd.

CHEM-FEED® Diaphragm Metering Pumps

Engineering and Technical Data

C-1100X

Fixed Speed

Stroke Length Adjustment



Features:

- **Double-ball inlet and outlet cartridge type ceramic check valves. Chemical resistant PVDF valve body and fitting, ceramic balls, Viton static seals and TFE/P ball seat o-rings. No metal springs are used.**
- **5-100% stroke adjustment results in a high frequency of small injections per minute.**
- **Outputs to 947 ml/min (360 GPD).**
- **Output pressures to 150 PSI.**
- **Teflon coated EP diaphragm.**
- **PVDF suction (foot) valve with Viton and TFE/P o-rings, ceramic check ball and removable polypropylene filter screen.**
- **Includes 3/8" OD suction and discharge tubing, Injection fitting with spring-loaded check valve and all mounting hardware.**
- **Durable housing of chemical resistant Valox (PBT) thermoplastic.**

Specifications:

Max. working pressure: .....150 psig (10.3 bar)
Max. fluid temperature: .....130° F (54° C)
Max. Ambient temperature: ..14° to 110° F/ -10° to 43° C
Maximum viscosity: .....1,000 Centipoise
Maximum suction lift: .....10 ft. Water 0 psig
Output adjustment range: 20:1
Stroke length:....5-100%
Duty cycle:.....Continuous
Enclosure: .....NEMA type 2, (Ip21)
Approximate shipping wt: ...10 lb. (4.2 kg)

Voltage (max amp): .....115VAC/60Hz, 14 & 30 rpm = 1.37 amp
45, 60, 125, 250 rpm = 1.87 amp
230VAC/60Hz, 14 & 30 rpm = 0.64 amp
45, 60, 125, 250 rpm = 0.74 amp
220VAC/50Hz, 14 & 30 rpm = 0.68 amp
45, 60, 125, 250 rpm = 1.14 amp
240VAC/50Hz, 14 & 30 rpm = 0.66 amp
45, 60, 125, 250 rpm = 1.04 amp
Power Cord Plug Type:.....115V60Hz = NEMA 5/15 (USA)
230V60Hz = NEMA 6/15 (USA)
220V50Hz = CEE 7/VII (EUROPE)
240V50Hz = CEE 7/VII (U.K)

Materials of Construction:

Wetted components:

Pump Head:.....Polypropylene (options: Teflon, Acrylic)
Pump Head Inlet/outlet Valves:
Cartridge valve body: .....PVDF
Tube adapters: .....PVDF
Check Balls: .....Ceramic
Ball Seat O-ring:.....TFE/P (optional EP)
Static Seal O-ring: .....Viton® (optional EP)
Suction Tubing:.....Clear PVC
Discharge Tubing:.....Natural Polyethylene (LLDPE)

Suction Footvalve/Strainer:
Body & Tubing adapter:.....PVDF (optional Teflon)
Strainer: .....Polypropylene
Check Ball: .....Ceramic (optional Teflon poppet)
Ball Seat O-ring:.....TFE/P (optional EP)
Static Seal O-ring: .....Viton® (optional EP)
Injection/Check valve:
Body & insert: .....Polypropylene (optional PVDF, Teflon)
Check Ball: .....Ceramic (optional Teflon poppet)
Spring: .....Hastelloy C-276
Ball Seat O-ring:.....TFE/P (optional EP)
Static Seal O-ring: .....Viton® (optional EP)

Blue-White Industries, Ltd.

CHEM-FEED® Diaphragm Metering Pumps

Dimensions:

Base Mounting

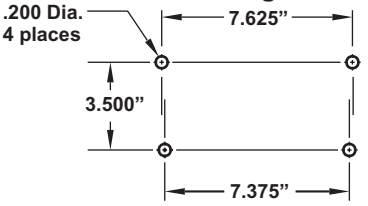

Rear Panel Mounting

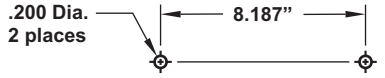

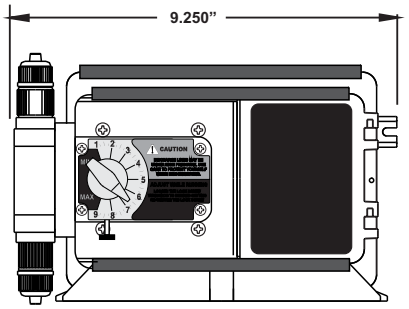

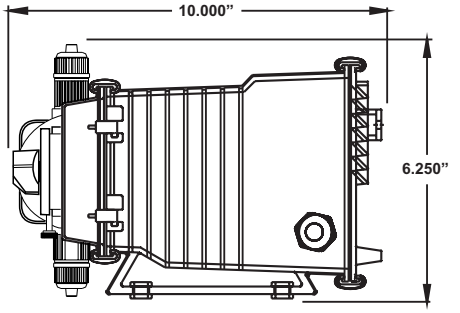

Model Number Matrix:

MODEL C 11 X [ ] [ ] [ ] [ ] [ ] [ ] [ ] [ ] [ ] [ ]

Pump system selection
C = Pump without tank system
T = Pump mounted on STAR-3 tank

Output Control
V = Digital speed control with external input
F = Analog speed control
C = Analog timer, 5 sec. Cycle - 100% duty
A = Analog timer, 60 sec. Cycle - 100% duty
E = Digital batch timer with external input
X = No output control - fixed feed rate

Maximum Motor RPM
0 = 14 RPM **3** = 60 RPM
1 = 30 RPM **4** = 125 RPM
2 = 45 RPM **5** = 250 RPM

Power Supply (motor protection)
4 = 115V60Hz (TP)
5 = 220V50Hz (TP)
6 = 230V60Hz (TP)
7 = 240V50Hz (TP)
TP = Thermal protection

Cam Stroke Length
1 = .125” **3** = .187”
2 = .055” **4** = .100”

Electrical Options
X = Standard Equipment
A = Junction box replaces power cord
P = Power cord and junction box
R = 230V Power cord w/NEMA 6/15 plug
Z = Proportional feed system - JBox/Cord

Footvalve / Tank Capacity
0 = C-340
1 = C-345
2 = C-340-6T
A = 7 Gallons (U.S.)
B = 15 Gallons (U.S.)
C = 30 Gallons (U.S.)

Injection Fitting
0 = A-014HD (Polypropylene - ½ lb spring)
1 = C-395HD (Polypropylene - 6 lb spring)
A = A-014-6T (Teflon - ½ lb spring)
B = C-395-6T (Teflon - 6 lb spring)
C = A-014HDK (PVDF - ½ lb spring)
D = C-395HDK (PVDF - 6 lb spring)

Elastomer Material
V = Viton **E** = EP

Diaphragm Style
0 = Large Teflon/EP
1 = Large Teflon/Viton
6 = Small Teflon / EP
7 = Small Teflon / EP

Pump Head Style
0 = Large Diaphragm
2 = Small Diaphragm
5 = Large Pressure release
7 = Large Diaghragm w/single ball valve

Pump Head Material
0 = Injection molded Polypropylene
4 = Machined Teflon
5 = Machined Acrylic

Flow rate and pressure capacities:

Max Output at 0 PSI GPD	GPH	LPH	OZ/MIN	Strokes Per minute	Max PSI	115V/60Hz Model Number	230V/60Hz Model Number	220V/50Hz Model Number
57.7	2.4	9.1	5.1	60	150	C11X344X000V00	C11X364X000V00	C11X354X000V00
119.7	4.9	18.9	10.6	125	150	C11X444X000V00	C11X464X000V00	C11X454X000V00
155.9	6.4	24.6	13.8	125	150	C11X441X000V00	C11X461X000V00	C11X451X000V00
260.8	10.8	41.1	23.1	250	100	C11X544X000V00	C11X564X000V00	C11X554X000V00
360.0	15.0	56.8	32.0	250	25	C11X543X000V00	C11X563X000V00	C11X553X000V00

Maximum Output vs. Pressure

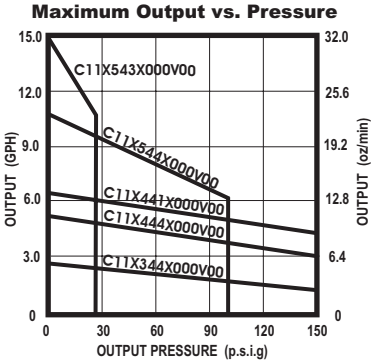

Blue-White Industries, Ltd.
5300 Business Drive, Huntington Beach, CA 92649
Tel: 714-893-8529 **Fax:** 714-894-9492
www.blue-white.com **Email:** sales@blue-white.com

All trademarks are the property of their respective owners.

Technical data sheet #85000-054 rev.062805