broad spectra fiber solutions

art photonics

Fiber Optic Focusing & Collimating Objectives

Zinc Selenide Infrared (IR) Focusing Objectives and Collimators were designed by **art photonics** to provide maximum coupling efficiency between the output from Mid-IR lasers and our chalcogenide and polycrystalline optical fibers. The aspheric design of focusing objectives provides a focal spot smaller than the fiber core diameter, allowing for precision alignment.
Zinc Selenide Infrared (IR) Focusing Objectives and Collimators are available with multiple anti-reflection (AR) coating options between 3-5µm or 8-12µm, and are ideal for a range of fiber coupling and collimating applications.



Features

- Compatible with SMA-terminated fiber cables
- NA=0.35, Pupil diameter 15 mm
- Refocusing or collimating design

Applications

- Focusing of collimating beam into the fiber
- Collimation of output beam from fiber
- Fiber end imagination to detector / emitter element
- For Polycrystalline fiber cables (4-18µm) and Chalcogenide fiber cables (1-6µm)

Specification of the objectives

Objective Type	Collimating	Refocusing
Optic elements	Plano-convex ZnSe lens, 3-5 or 8-12µm AR-coating F=20mm	Double-convex ZnSe lens, 3-5 or 8-12µm AR-coating 2F=20mm
Dimensions	Diameter 8 mm, Length 25 mm	Diameter 28 mm, Length 25 mm
Alignment options	Z-alignment ± 5mm	Z-alignment ± 5mm
Other options	FC/PC fiber adaptor on request	C/PC fiber adaptor on request

Drawings

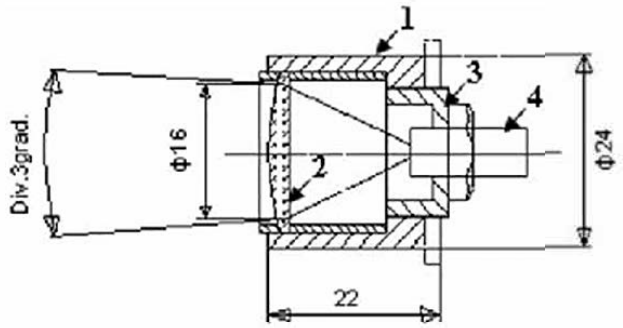

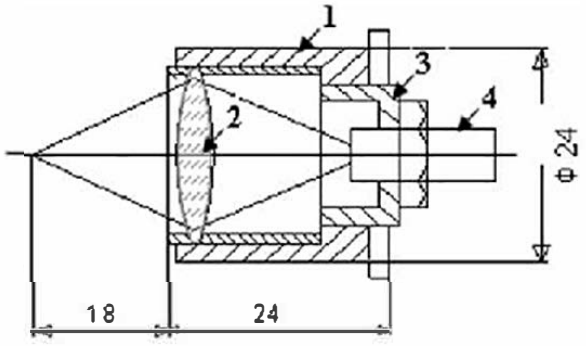

- 1-Case
- 2- Lens
- 3- Z-transrat,on stage
- 4- SMA-Adaplor

Transmission spectra of lenses with AR coatings

