Baoding Longer Precision Pump Co.,Ltd.
Building A, Chuangye Center Baoding, National
High-Tech Industrial Development Zone
Baoding, Hebei, China 071051
TEL: 86-312-3110087 3138553
FAX: 86-312-3168553
E-mail: longer@longerpump.com
Http: //www.longerpump.com

WT600-3J Longer Peristaltic Pump

WT600-3J PERISTALTIC PUMP
OPERATING MANUAL

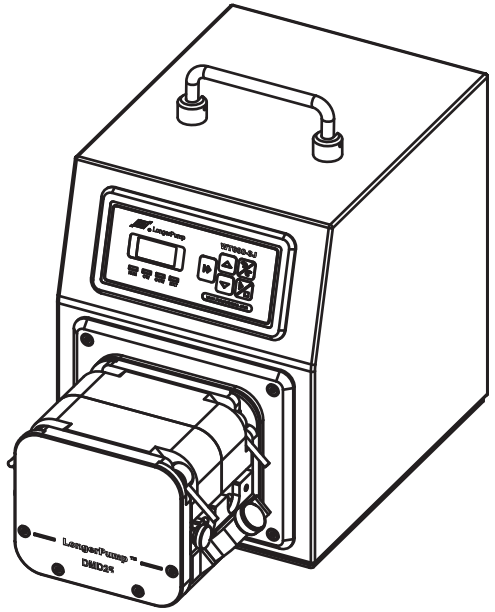

Baoding Longer Precision Pump Co.,Ltd.

⚠ Important Information:

Please read operation manual carefully before operation.

⚠ Warning:

- Tubing breakage may result in fluid sprayed from pump. Use appropriate measures to protect operator and equipment. Please check the tubing frequently and changing the tubing in time.
- If the power line or the plug are worn or damaged please pull out the plug (Hold the plug not the power line when pulling out).
- Please shut down the power supply and pull out the plug when you think the pump needs to be maintained or repaired.
- Shut down the power supply of the pump when connecting to external control equipment.

WT600-3J OPERATING MANUAL

Table of Contents

Introduction 1

Operating Panel 2

Basic Operation 2

Start/Stop Control 2

Direction Control 2

Speed Adjusting Function 2

Prime Function 2

Acceptable Pump Heads and Tubing 3

External Control Function 4

External Control Input Voltage/Current Signal Speed Adjusting Function 5

External Control Aviation Plug Pins Definitions 5

Footswitch Control 6

Communication Control 6

Maintenance 7

Warranty 7

Technical Specifications 8

Introduction

WT600-3J is a high IP rating product and is dustproof and waterproof. Suitable for moist and dust atmosphere. Driven by DC brushless motor the pump has features of high efficiency, low vibration and long service life. Applicable pump heads are KZ25, YZ1515x, YZ2515x, YZII15, YZII25, DG15-24 and DMD25. The pump delivers flow rates from 4.2 to 6000 mL/min. The speed can be adjusted manually or automatically through external control interface. The external control includes analog control and communication control.

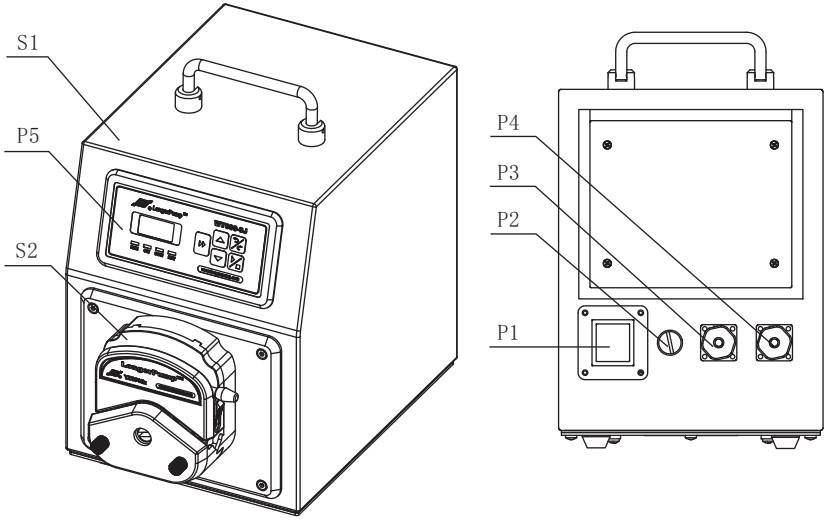

S	Standard Configuration	P	Parts
S1	Drive	P1	Power Switch
S2	Pump Head	P2	Fuse Holder
		P3	Power Socket
		P4	External Control Socket
		P5	Membrane Keypad

Note:

Make sure the power line of the pump is grounded reliably to protect the operator in humid condition.

WT600-3J OPERATING MANUAL

Operating Panel

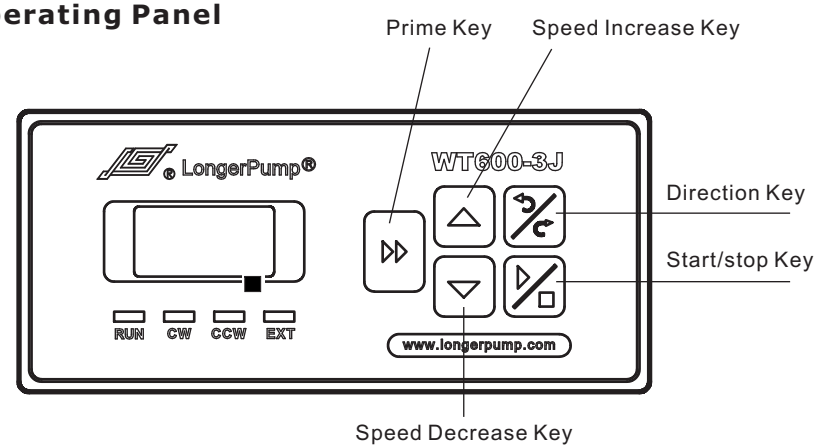

Basic Operation

- **Start/Stop Control**

  In common state (non prime state), press the Start/Stop Key to start or stop the pump. In running state, the RUN indicator is light. In stop state, the RUN indicator goes out. This key is invalid in prime state when pump runs at full speed.

- **Direction Control**

  In common state (non prime state), press the Direction Key to change the rotating direction of the pump and the CW or CCW Indicator lights at the same time. This key is invalid in prime state.

- **Speed Adjusting Function**

  In common state (non prime state), press the Speed Increase Key or Decrease Key one time to increase or decrease the speed in step of 1 rpm. Continuously press the Increase Key or Decrease Key to change the speed rapidly. The Speed Increase Key and Decrease Key are invalid in prime state.

- **Prime Function**

  In common state or stop state, press the Prime Key to enter prime state when the pump runs at full speed (that is 600 rpm) and the LED displays "---" for empting, filling and rinsing operation; the RUN indicator lights. Press the Prime Key again to return to previous state.

Acceptable Pump Heads and Tubing

Pump Head	Tubing	Ref. Flow Rates (Single Channel: mL/min)
 1、2 K Z25	15# 24#	180～6000
 1、2 Y Z1515	35# 36# 13# 14# 19# 16#	4.2～2280
 1、2 Y Z2515	25# 17# 18# 15# 24#	102～1740
 1、2 Y ZⅡ15	13# 14# 19# 16# 25# 17# 18#	4.2～2280
 1、2 Y ZⅡ25	15# 24#	102～3000
 DG15-24	16# 25# 17#	4.9～1800
 DMD25	119# 120# 15# 24# 35# 36#	25～4000

Note: The working speed for DMD25 pump heads is less than 350 rpm.

External Control Function

The external control includes start/stop control, direction control and speed control (4-20mA, 0.5-5V, 1-10V or 1-10kHz). The start/stop of the pump can be controlled by footswitch or relay, and the direction and speed is still controlled by membrane keypad when using footswitch or relay.

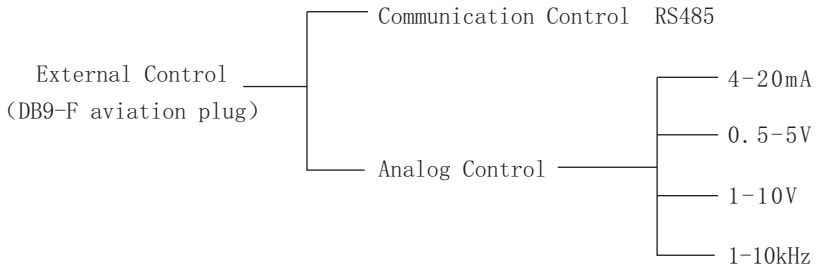

Note:

Each pump can only have one kind of external control mode.
It needs to be specified in advance when using the external control.

External control interface uses waterproof aviation DB9-F socket. Please see below:

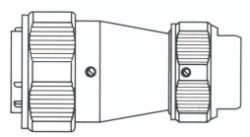

Drawing 1
Waterproof Aviation Plug

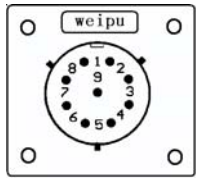

Drawing 2
DB9-F Socket Terminals Drawing

❖ **External Control Input Voltage/Current Signal Speed Adjusting Function**

1. External control interface connects external control signals through waterproof aviation plug(please see drawing 1and 2).

2. Insert waterproof aviation plug to the external control interface which is in the rear of the pump, the EXT indicator lights. Connect the corresponding control signal. Then the pump is controlled by external control.

External Control Aviation Plug Pins Definitions

#1 Speed control signal input. 4-20mA, 0.5-5V, 1-10V or 1-10kHz input signals control the speed of the pump.

#2 Start/stop signal input. When open or connected to low level, the pump runs; when connected to high level, the pump stops.

#3 Direction signal input. When open or connected to low level, the pump rotates clockwise; when connected to high level, the pump rotates counter clockwise.

#4 Analog ground (AGND) in 4-20mA, 0.5-5V, 1-10V input signal.

#5 Voltage or current input identifying signal. Input voltage signal, open; input current signal, short with pin #4.

#6 External control identifying signal. Short with pin #4.

#7 15V power supply.

#8 Short with pin #4 when inputting 1-10 kHz pulse signal.

#9 COM in pulse input signal.

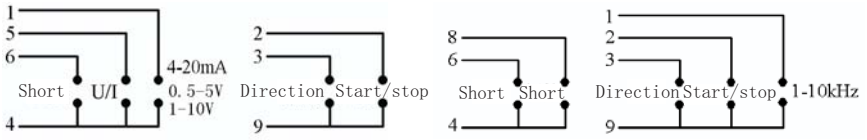

4-20mA/ 0.5-5V/1-10V Wiring Diagram　　1-10kHz Wiring Diagram

Footswitch Control

Connect to external control interface to control the start/stop of the pump. The speed and direction of the pump are controlled by membrane keypad.

Communication Control

The pump can connect to control computer (computer, PLC, SCM) through RS485 serial communication module.

Note:

1. Max. 30 pumps can be controlled by a control computer. The pump address number must be unique to prevent the communication error.
2. Each pump address number can be determined through communication mode.
3. When communication function is needed, please specify in advance when ordering and ask for communication protocol from Longer Company.

External Control Aviation Plug Pins Definitions in Communication Mode

- **#1** RS485-A
- **#2** RS485-B
- **#3** RS485-COM
- Other pins are open.

Maintenance

- When the pump is idle, we recommend you to release the tubing from pressure. This helps to protect the tubing from unnecessary strain and prolongs its service life
- Keep rollers clean and dry. This will prolong the service lives of tubing and pump head.
- The surface of the pump head are not organic solvent and aggressive liquids resistant. Please pay attention when using.
- Used in good ventilation condition.

Warranty

The warranty period for this product is one year. If repair or adjustment is necessary within the warranty period, the problem will be corrected at no charge if it is not due to misuse or abuse on your part, as determined by the manufacturer. Repair costs outside the warranty period, or those resulting from product misuse or abuse, may be invoiced to you.

Technical Specifications

❖ Functions

Applicable Pump Head:	YZ1515x, YZ2515x, YZII15, YZII25, DG15-24, KZ25, BZ25, DMD25
Operating Mode:	Membrane keypad
Direction Control:	cw and ccw reversible
Prime:	Fast filling and emptying
Speed Control:	Adjust the speed by membrane keypad
Display:	Display the current speed, start/stop state, direction and external control state
Memory Function:	Storing the running parameter automatically (working state keeps at least 3 seconds)
External Control Input:	Control the speed, start/stop and direction of the pump
Footswitch:	Control the start/stop of the pump
Communication:	Communicate with control computer
Cooling Mode:	National cooling

❖ Specifications

Speed:	60–600rpm
Speed Accuracy:	+/–1.0%
Speed Resolution:	1.0 rpm
Display Mode:	3 digits LED displays the current speed; 4 pcs LED indicators display the working modes
External Control Speed Adjusting:	4–20mA, 0.5–5V, 1–10V or 1–10kHz are corresponding to 60–600 rpm
Communication:	RS485
Applicable Power:	AC 176–264V 50Hz/60Hz
Power Consumption:	≤190 W
Operating Condition:	Temperature 0–40℃ Relative humidity 10–90%
Drive Dimensions:	314 × 216 × 179 (mm)(L × W × H)
Drive Weights:	7.3 kg
IP Rating:	IP 55