Baoding Longer Precision Pump Co., Ltd.

ADD: Building A, Chuangye Center Baoding
National High-Tech Industrial Development Zone,
Baoding, Hebei, China 071051
TEL: 86–312 –3110087 3138553
FAX: 86–312 –3168553
E-mail: longer@longerpump.com
www.longerpump.com

BQ50-1J Longer Peristaltic Pump

BQ50-1J PERISTALTIC PUMP OPERATING MANUAL

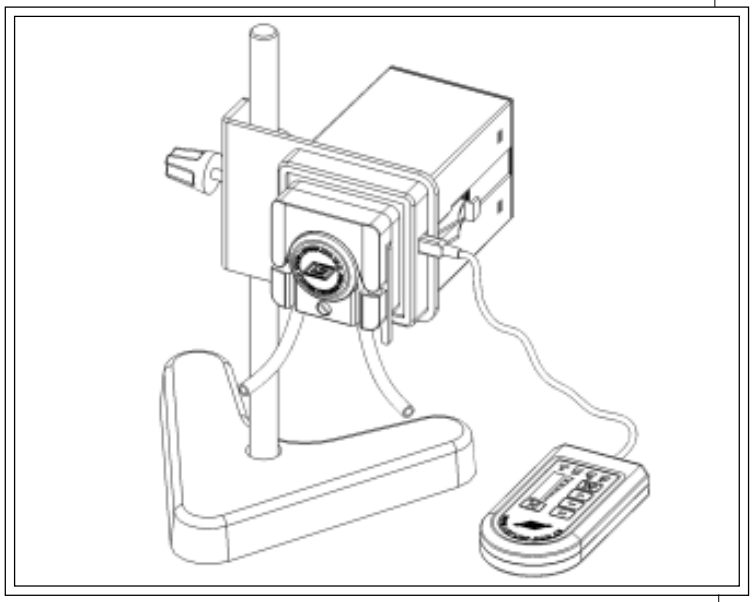

Baoding Longer Precision Pump Co., Ltd.

⚠ **IMPORTANT INFORMATION**:

Please read operation manual carefully before operation.

⚠ **WARNINGS**:

- Tubing breakage may result in fluid sprayed from pump. Use appropriate measures to protect operator and equipment. Please check the tubing frequently and change the tubing in time.

- If the power line or the plug is worn or damaged please pull out the plug (Hold the plug not the power line when pulling out).

- Please shut down the power supply and pull out the plug when meet below circumstances (Hold the plug not the power line when pulling out).
  The fluids splash on the body of the pump.
  You think the pump needs to be maintained or repaired.

- Please shut down the power supply before install the external control equipments.

BQ50-1J OPERATING MANUAL

Table of Contents

Introduction 1

Operation Panel of Hand-held Remote Controller 2

Basic Operation

Start/Stop Control 2

Direction Control 2

Speed Control 3

Prime Function 3

Pump Head and Tubing 3

WX10 Pump Head 4

External Control Function 5

Maintenance 7

Warranty 7

Pump Head Installation 7

Specifications 8

Introduction

BQ50-1J peristaltic pump combines low flow and a compact size into a single pump that mounts in your equipment rack or panel. The pump delivers flow rates from 0.006 to 37.0 mL/min. And it can be operated through hand-held remote controller, analog interface or RS485.

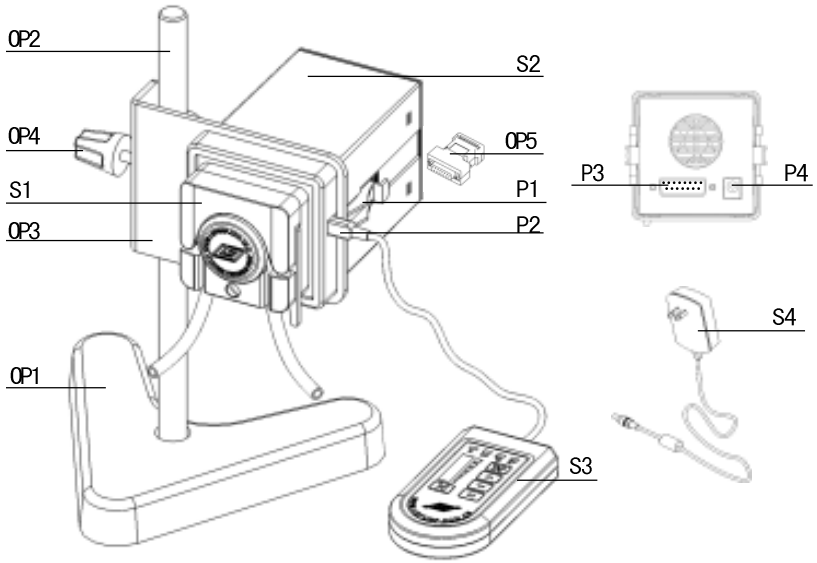

Assembly Drawing

S	Standard Configuration	**OP**	Optional Fittings	**P**	Parts
S1	Pump Head	**OP1**	Small V-base	**P1**	Fixing Clip
S2	Drive	**OP2**	Polished Stainless Steel Frame Tube	**P2**	Socket for Hand-held Remote Controller
S3	Hand-held Remote Controller	**OP3**	Fixing Plate	**P3**	External Control Interface
S4	Adapter	**OP4**	Fixing Screw	**P4**	Socket for Adapter
		OP5	External Control Module		

Reference:

For detail information about external control function please see page 5.

BQ50-1J OPERATING MANUAL

Operation Panel of the Hand-held Remote Controller

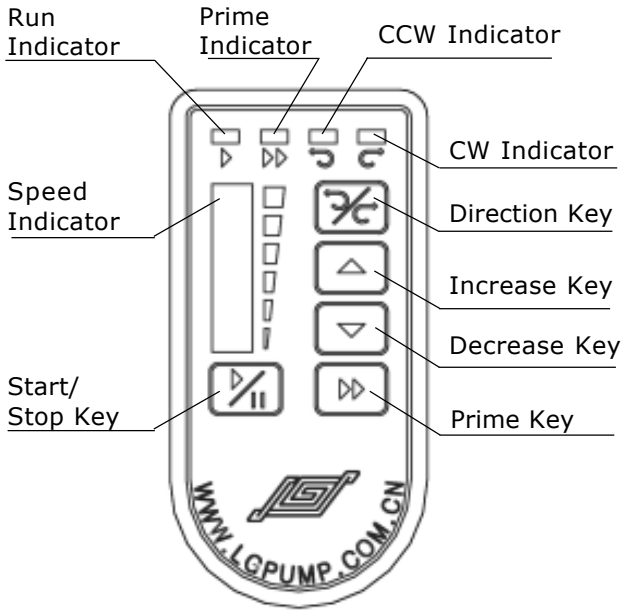

Basic Operation:

Note:

In external Control Mode, hand-held remote controller is invalid.

❖ **Start/Stop Control**

Press the Start/Stop Key to start or stop the pump and the Run Indicator lights or goes out at the same time. The Start/Stop key is invalid in prime state.

❖ **Direction Control**

Press the Direction Key to change the rotating direction of the pump and the CW or CCW indicator lights at the same time. The Direction Key is invalid in prime state.

❖ **Speed Control**

Press Increase Key or Decrease Key one time to increase or decrease the speed in step of 1 rpm. Continuously press the increase key or decrease key to change the speed rapidly. The speed indicator changes correspondingly. One small speed indicator stands for 5 rpm. For example: three small speed indicators lighting stands for the rpm range is 11 - 15 rpm. The increase key and decrease key are invalid in prime state.

❖ **Prime Function**

In common state, press the Prime Key to enter prime state, when prime indicator and all the speed indicators light and pump runs at full speed. Press the Prime Key again to return to the common state and prime indicator goes out.

Pump Head and Tubing

Pump Head	Tubing Wall Thickness (mm)	Tubing Inner Diameter (mm)	Flow Rate (mL/min)
 WX10	0.8 – 1.0	≤4.8	0.006 – 37

Reference

For detail information about pump head usage and tubing load-

WX10 Pump Head

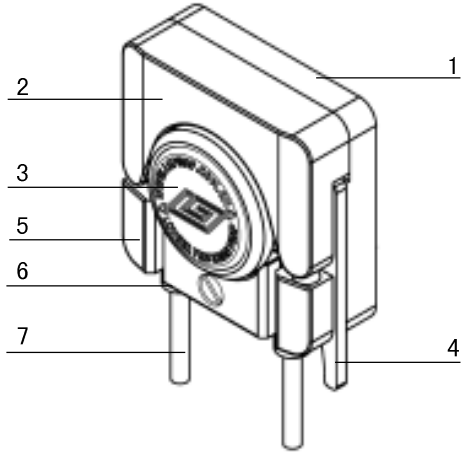

Note

The material of pump head is organic solvent non-resistance.

1 Base – All the other parts of pump head are assembled on base.
2 Compression Block – Can rotate on the base. For the function of pressing the tubing tightly.
3 Rotor Assembly – For the function of extruding the tubing together with compression block.
4 Trigger – Connect the compression block and the base. Make the compression block in working position.
5 Tubing Base – Fix tubing. Make tubing in a suitable position.
6 Tubing Stop – Be on the tubing. Prevent tubing from sliding.
7 Tubing – For transferring the fluids.

❖ **Operating Procedure**

- Turn the trigger counter clockwise and open the compression block. Put the tubing with stops between rollers and compression block and in tubing base.
- Turn the compression block clockwise and press the tubing. Make the trigger hitch the pin on the base and lock the compression block.
- Adjust the tubing stops and lock the tubing to prevent the tub-

External Control Function

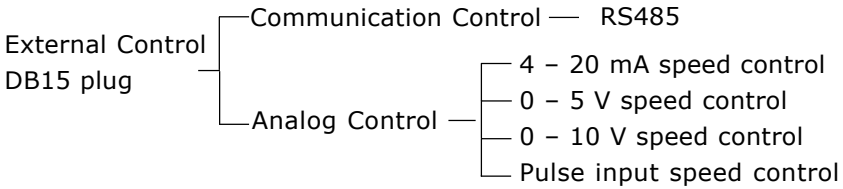

❖ **Communication Control**

Please contact Longer Company for communication protocol.

❖ **Analog Control**

- External control module is shown as below. Plug the required module into the external control interface on the rear panel of the pump (please see assembly drawing) and connect the corresponding control signal wire, pump turns into external control mode.

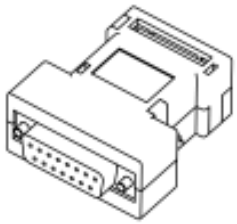

External Control Module

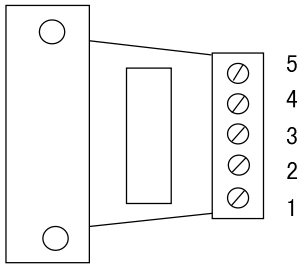

Note

Four kinds of standard external control module need to order separately according to special requirements.

- **Pin Definition of Standard External Control Module**

1# Analog speed control input, for external speed control in external control modules of 4 to 20 mA, 0 to 5V and 0 to 10 V.

2# External start/stop control input. When connected to COM, the pump runs, when connected to high level (5 – 12 V), the pump stops.

3# External cw/ccw control input. When connected to COM, the pump rotates cw, when connected to high level (5 – 12 V), the pump rotates ccw.

4# Reference potential for 4 to 20 mA, 0 to 5V/10V speed control input.

Pulse speed control input, for external speed control in external control module of 0 to 10 KHz.

5# Reference potential for external cw/ccw, external start/stop and pulse speed control input.

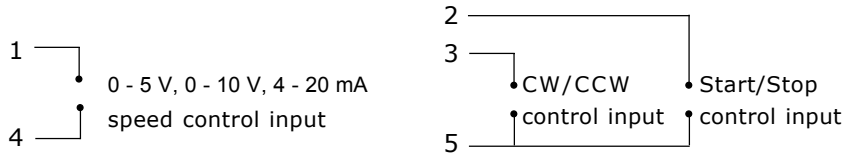

0 - 5 V, 0 - 10 V, 4 - 20 mA External Control Module Wiring Diagram

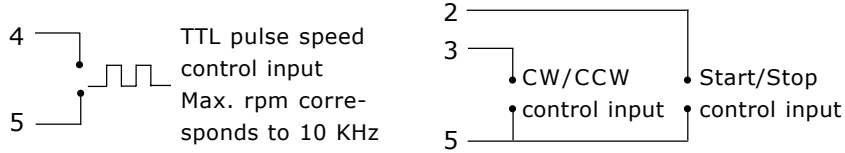

Pulse Input External Control Module Wiring Diagram

Maintenance

- When the pump is idle, we recommend you to release the tubing from pressure. This helps to protect the tubing from unnecessary strain and prolongs its service life
- Keep rollers clean and dry. This will prolong the service lives of tubing and pump head.
- The surface of drive and the pump head are not organic solvent and aggressive liquids resistant. Please pay attention when using.

Note

If a trouble happens please contact us or our dealers.

Warranty

The warranty period for this product is one year. If repair or adjustment is necessary within the warranty period, the problem will be corrected at no charge if it is not due to misuse or abuse on your part, as determined by the manufacturer. Repair costs outside the warranty period, or those resulting from product misuse or abuse, may be invoiced to you.

Pump Head Installation

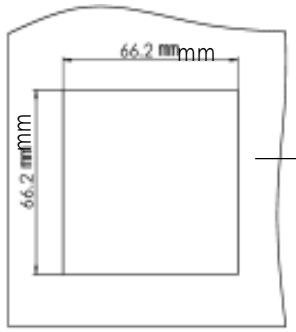

OP3 Fixing Plate
(See page 1)

Installation Hole Dimensions

Note

Suitable panel thickness is 1 - 3 mm

Technical Specifications

❖ **Functions**

- Applicable Pump Head: WX10
- Manual Control: Speed Adjusting, direction, start/stop
  speed adjusting precision is 1rpm
- External Control: 0 - 5 V, 0 - 10 V, 4 - 20 mA and 0 - 10 KHz
  speed control; Start/stop and cw/ccw control
- Prime: Fast filling and empting
- Direction Control: CW and CCW reversible
- Memory Function: Storing the running parameter automatically
- Communication: RS485, baud rate: 1200 bps
- Cooling Mode: Heat-emitting fan

❖ **Specifications**

- Speed: 0.1 - 50.0 rpm
- Speed Precision: 0.1 rpm (external control)
- Applicable Tubing: Inner diameter: ≤4.8 mm
  Wall thickness: 0.8 - 1 mm
- Motor: Step motor
- Applicable Power: DC 12V/1A
- Adapter Power: AC 100V - 240V 50/60Hz
  Power Consumption: < 10W
- Operating Condition: Temperature 0 - 40℃
  Relative humidity < 80%
- Drive Dimensions (L × W × H): 135 × 72 × 72 (mm)
- Drive Weight: 0.5 Kg
- IP Rating: IP 31