Baoding Longer Precision Pump Co.,Ltd.
Building A, Chuangye Center, Baoding National
High-Tech Industrial Development Zone
Baoding, Hebei, China 071051
TEL: 86-312-3110087 3138553
FAX: 86-312-3168553
E-mail: longer@longerpump.com
Http: //www.longerpump.com

YT600-1J Peristaltic Pump Drive

YT600-1J
Peristaltic Pump Drive
Operating Manual

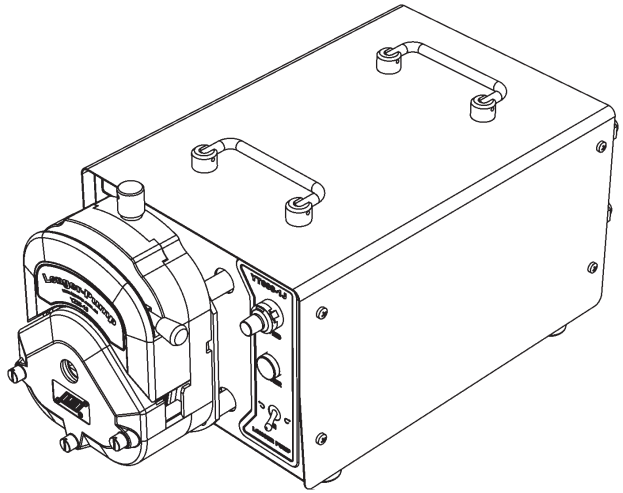

Baoding Longer Precision Pump Co.,Ltd.

⚠ Important Information:

Please read operation manual carefully before operation.

⚠ Warning:

- Tubing breakage may result in fluid sprayed from pump. Use appropriate measures to protect operator and equipment. Please check the tubing frequently and changing the tubing in time.
- If the power line or the plug are worn or damaged please pull out the plug (Hold the plug not the power line when pulling out).
- Please shut down the power supply and pull out the plug when you think the pump needs to be maintained or repaired.
- Shut down the power supply of the pump when connecting to external control equipment.

Warranty:

- The warranty period for YT600-1J is one year, if repair or adjustment is necessary within the warranty period, the problem will be corrected at no charge if it is not due to misuse or abuse on your part, as determined by the manufacturer. Repair costs outside the warranty period, or those resulting from product misuse or abuse, may be invoiced to you.

Table of Contents

Introduction 1
Operation Panel 1
Basic Operation 2
Start/Stop and Direction Control 2
Speed Control 2
Acceptable Pump Head 2
External Control 3
Maintenance 3
Technical Specifications 4

Instruction

YT600-1J peristaltic pump delivers flow rates from 600 to 11000 ml/min, the speed can be adjusted manually or through external control interface. Driven by DC motor YT600-1J has higher torque and can drive double pump heads. The IP rating is IP54 which is dustproof and waterproof to some extent. This pump is suitable for industrial applications which need high flow rates.

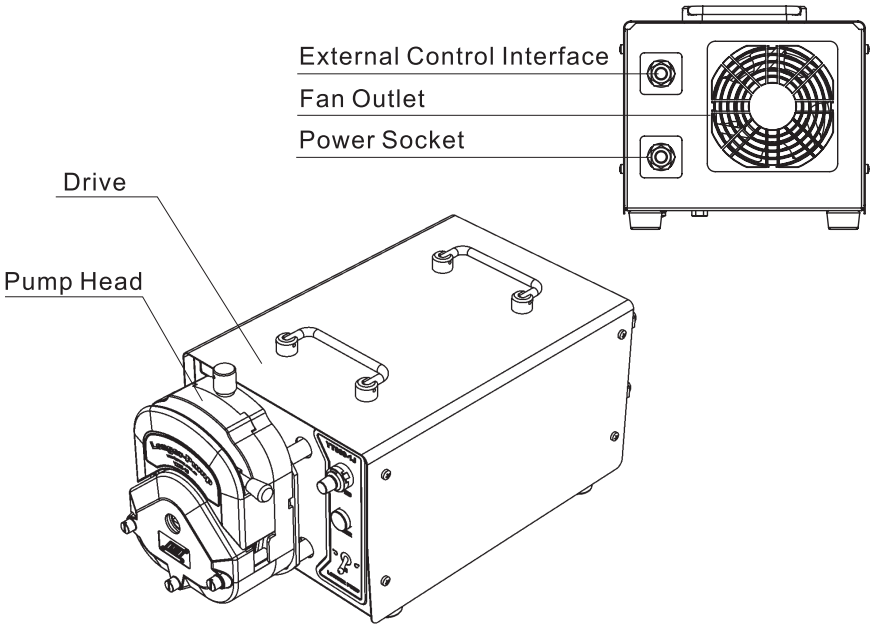

Operation Panel

1.Mounting Board
2.Coupling
3.M6 Threaded Holes for Pump Head
4.Speed Adjusting Knob
5.Power Supply Indicator
6.CW/Stop/CCW Switch

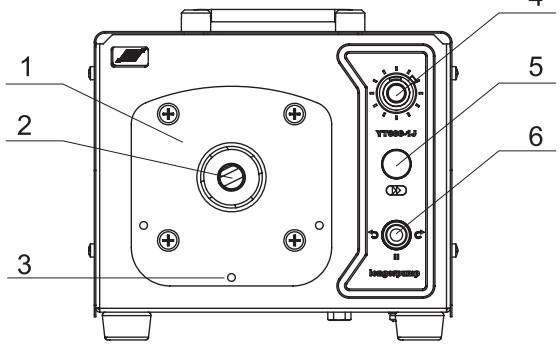

Basic Operation

Insert power cord into power socket in the rear of the pump, turn on the pump.

❖ **Start/Stop and Direction Control**

Put【CW/Stop/CCW Switch 】in【 ↺ 】position, pump runs counter clockwise; Put【CW/Stop/CCW Switch】in【 ↻ 】position, pump runs clockwise; Put【CW/Stop/CCW Switch】in【 ⏸ 】position, pump stops.

❖ **Speed Control**

In manual mode, turn【Speed Adjusting Knob】clockwise, speed increases; turn【Speed Adjusting Knob】counter clockwise, speed decreases.

Note:

- Speed Adjusting Knob is invalid in external control mode.
- Speed Adjusting Knob can be turned 10 circles at the most. Do not turn the knob overly to avoid damage the components.
- Speed Adjusting Knob has locking device which needs to be unlocked before rotating the knob to avoid damaged.

Acceptable Pump head & Tubing

	YZ35		YZ35-13		KZ35	
Pump Head					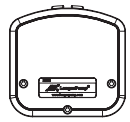	
Part Number	Long shaft	05011510001 (AI)	Long shaft	05011520001	Long shaft	05010530001
		05011510011 (POM)			Long shaft /Main head	05010530002
	Short shaft	05011510002 (AI)	Short shaft	05011520002	Long short /Stackable head	05010530003
		05011510012 (POM)				
Tubing	73# 82#					
Flow Rates (mL/min) 60–600 (rpm)	600 - 11000					

Reference:
Please refer to operating manuals of YZ35 series and KZ35 pump head for detailed information.

External Control

- There are three external control modes; customer can select one control mode only.
  1. 4–20 mA standard current input
  2. 0–10 V standard voltage input
  3. 0–10 kHz pulse input
- External interface shown as Figure, all terminals define as below:
  # 1: 0–10 kHz input
  # 2: 0–10V input
  # 3: 4–20mA input
  # 4: Manual/External control identification
  # 5: Start/Stop controlled through external control
  # 6: COM (common ground wire)

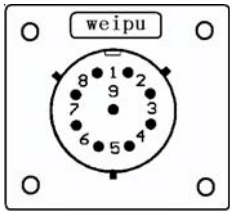

Example: 4-20mA standard current input controls the speed and start/stop of the pump. Wiring diagram is shown as below:

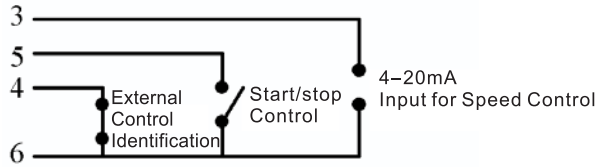

Maintenance

- This drive can not be rinsed by pressed water.
- Keep fan outlet clean. Clean sponge filter in time.
- This drive can not be used in dust environments under pressure.

If a trouble happens, please contact us or our dealers.

Peristaltic Pump Drive Operating Manual

Technical Specifications

❖ Functions

Pump Head	YZ35 series, KZ35
Manual Control	Speed, direction, start/stop
External Control	Start/stop, speed (Only one kind of external control is available)
Speed Adjusting Mode	10-turn potentiometer, stepless speed regulation
Direction Control	Direction switch to set CW and CCW.
Cooling Mode	Heat-emitting fan
Application	Industrial batch fluids transferring

❖ Specifications

Speed	60−600 (rpm)
Speed Display Resolution	Digital knob：0.01×600=6 (rpm)
Flow Rates	600−11000 (mL/min)
Power Supply	AC 220V (±10%)　50/60Hz
Power Consumption	＜400W
Operating Condition	Temperature 0−40℃ Relative humidity ＜80%
Drive Dimension	(L×W×H)：325×236×193(mm)
Drive Weight	20 kg
IP Rating	IP54