BAKER HUGHES
a GE company

Oxygen

oxy.IQ

Panametrics Oxygen Analyzer

User's Manual



bhge.com

910-296 Rev. E
July 2018

oxy.IQ

Panametrics Oxygen Analyzer

User's Manual

910-296 Rev. E
July 2018

bhge.com

© 2017 Baker Hughes, a GE company – All rights reserved.

Baker Hughes reserves the right to make changes in specifications and features shown herein, or discontinue the product described at any time without notice or obligation. Contact your BHGE representative for the most current information. The Baker Hughes logo is a trade mark of Baker Hughes, a GE company. The GE Monogram is a trademark of the General Electric Company.

[no content intended for this page]

Product Registration

Thank you for purchasing a model *oxy.IQ* from GE. Please register your product at http://info.geoilandgas.com/productRegistration.html for product support such as the latest software/firmware upgrades, product information and special promotions.

Services

GE provides customers with an experienced staff of customer support personnel ready to respond to technical inquiries, as well as other remote and on-site support needs. To complement our broad portfolio of industry-leading solutions, we offer several types of flexible and scalable support services including: Training, Product Repairs, Extended Warranties, Service Agreements and more. Please visit www.gemeasurement.com/services for more details.

Terms and Conditions

GE's sales *Terms and Conditions* for your recent purchase of a GE product, including the applicable product Warranty, can be found on our website at the following link: www.gemeasurement.com/sales-terms-and-conditions

Typographical Conventions

Note: *These paragraphs provide information that provides a deeper understanding of the situation, but is not essential to the proper completion of the instructions.*

Important : *These paragraphs provide information that emphasizes instructions that are essential to proper setup of the equipment. Failure to follow these instructions carefully may cause unreliable performance.*



CAUTION! This symbol indicates a risk of potential minor personal injury and/or severe damage to the equipment, unless these instructions are followed carefully.



WARNING! This symbol indicates a risk of potential serious personal injury, unless these instructions are followed carefully.

Safety Issues



WARNING! It is the responsibility of the user to make sure all local, county, state and national codes, regulations, rules and laws related to safety and safe operating conditions are met for each installation.



Attention European Customers! To meet CE Marking requirements for all units intended for use in the EU, all electrical cables must be installed as described in this manual.

Auxiliary Equipment

Local Safety Standards

The user must make sure that he operates all auxiliary equipment in accordance with local codes, standards, regulations, or laws applicable to safety.

Working Area



WARNING! Auxiliary equipment may have both manual and automatic modes of operation. As equipment can move suddenly and without warning, do not enter the work cell of this equipment during automatic operation, and do not enter the work envelope of this equipment during manual operation. If you do, serious injury can result.



WARNING! Make sure that power to the auxiliary equipment is turned OFF and locked out before you perform maintenance procedures on this equipment.

Qualification of Personnel

Make sure that all personnel have manufacturer-approved training applicable to the auxiliary equipment.

Personal Safety Equipment

Make sure that operators and maintenance personnel have all safety equipment applicable to the auxiliary equipment. Examples include safety glasses, protective headgear, safety shoes, etc.

Unauthorized Operation

Make sure that unauthorized personnel cannot gain access to the operation of the equipment.

Regulatory Compliance

Waste Electrical and Electronic Equipment (WEEE) Directive

GE is an active participant in Europe's *Waste Electrical and Electronic Equipment* (WEEE) take-back initiative (Directive 2012/19/EU).

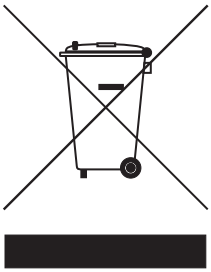

The equipment that you bought has required the extraction and use of natural resources for its production. It may contain hazardous substances that could impact health and the environment.

In order to avoid the dissemination of those substances in our environment and to diminish the pressure on the natural resources, we encourage you to use the appropriate take-back systems. Those systems will reuse or recycle most of the materials of your end life equipment in a sound way. The crossed-out wheeled bin symbol invites you to use those systems.

If you need more information on the collection, reuse and recycling systems, please contact your local or regional waste administration. Visit http://www.gemeasurement.com/environmental-health-safety-ehs for take-back instructions and more information about this initiative.

RoHS

The *oxy.IQ* fully complies with RoHS regulations (Directive 2011/65/EU).

Product Registration iii
Services iii
Terms and Conditions iii
Typographical Conventions iii
Safety Issues iv
Auxiliary Equipment iv
Regulatory Compliance vi

Chapter 1. Features and Capabilities

1.1 Introduction 1
1.2 Hazardous Location Certifications 2
1.3 Applications 2
1.4 Features 3
1.5 Sample Systems 4

Chapter 2. Installation

2.1 Mounting the oxy.IQ 5
2.2 Wiring the oxy.IQ 8
2.2.1 Longer Cable Lengths 9
2.3 Installing an Oxygen Sensor 10

Chapter 3. Initial Setup & Operation

3.1 The oxy.IQ Display and Keypad 13
3.2 The oxy.IQ Menu Map 14
3.3 Adjusting and Calibrating the oxy.IQ 14
3.3.1 Selecting the Output Range 15
3.3.2 Trimming the Analog Output 16
3.3.3 Air Calibration 17
3.3.4 Span Gas Calibration 19

Chapter 4. User Programming

4.1 Introduction 21
4.2 The Calibration Menu 21
4.2.1 Air 21
4.2.2 Span Gas 21
4.2.3 Sensor Life 22
4.3 The Display Menu 23
4.3.1 Select the O2 Parameter 23
4.3.2 Display the Sensor Range 24

4.3.3 Adjust the Contrast 24
4.4 The Output Menu 25
4.4.1 Range 25
4.4.2 Trim 25
4.4.3 Error Type 25
4.4.4 Error Output 27

Chapter 5. The Service Menu
5.1 Menu Map & Service Passcode 29
5.2 Entering the Service Menu 29
5.2.1 Diagnostics 30

Chapter 6. Specifications
6.1 Intrinsically Safe (IS) Installation 31
6.2 Non-Incendive (Div 2) and General Purpose Installation 31
6.3 All Installations 32
6.4 Product Label 35

Appendix A. Outline and Installation Drawings 37

Appendix B. Menu Maps 45

Appendix C. Order String 49

Appendix D. Certifications 51
D.1 ATEX EU-Type Examination Certificate 52
D.2 ATEX IECEx MAM Ex Certificate 56
D.3 Canadian Certificate of Compliance 58
D.4 FM Certificate of Compliance 60
D.5 IECEx Certificate of Conformity 62

Addendum A. oxy.IQ Safety Manual 69

Chapter 1. Features and Capabilities

1.1 Introduction

The **oxy.IQ** *Panametrics Oxygen Transmitter* (see *Figure 1* below) is a highly reliable and cost-effective two-wire, loop-powered transmitter with a linearized 4 to 20 mA output. It measures oxygen content in ten ppm ranges (10, 20, 50, 100, 200, 500, 1000, 2000, 5000 and 10000 ppm) and eight percentage ranges (1, 2, 5, 10, 21, 25, 50 and 100%). All ranges are user-selectable. This compact transmitter uses proven sensor technology to accurately measure oxygen content in a variety of gases, even in hazardous (classified) locations.



Figure 1: oxy.IQ

1.2 Hazardous Location Certifications

When equipped with an optional *Zener barrier* or *galvanic isolator*, the oxy.IQ can be mounted in a hazardous (classified) location. The oxy.IQ with *Intrinsically Safe* option is certified to USA, Canadian, ATEX, and international IECEx IS requirements. The standard oxy.IQ is certified to USA, Canadian, EU ATEX and International IECEx Div2/Zone 2
Non-Incendive requirements.

1.3 Applications

Some typical applications for the **oxy.IQ** Panametrics oxygen transmitter include the following:

- Glove box purge and leak detection
- Natural gas
- Semiconductor wafer machines
- Coating process machines
- Membrane air separators
- Inert welding gases
- Pure gaseous hydrocarbon streams
- Process monitoring of gaseous monomers
- Heat treating and bright annealing

1.4 Features

The **oxy.IQ** oxygen sensor uses an advanced galvanic fuel cell that provides superior performance, accuracy, stability and long life. The cell's innovative design eliminates the potential for negative signal output and reduces sources of contamination.

The cell is unaffected by other background gases or hydrocarbons and is compatible with acidic gases (**OX-2** and **OX-4** cells). Recovery from air at low ppm levels takes just a few minutes. Because the cell is self-contained, minimal maintenance is required. There is no electrolyte to change and no electrodes to clean.

The **oxy.IQ** offers the following features:

- Two-wire, loop-powered, 4 to 20 mA transmitter
- Display with keypad
- Intrinsically-safe option
- Proven galvanic fuel cell O_2 sensor technology
- User-selectable ranges for ppm and percent oxygen
- User-friendly and intuitive user interface with diagnostics
- Microprocessor-based, all-digital technology for reliable operation
- Low maintenance, economical and compact
- Sensor failure output error
- Sensor lifetime indication
- NAMUR error indication

1.5 Sample Systems

In addition to the standard features and options, GE offers a full line of sample handling systems for a variety of applications. If needed, GE can design and build a sample conditioning system to meet unique application requirements. Please contact GE for details.

Table 1 below lists some background gases that can interfere with the oxygen sensor.

Table 1: Oxygen Sensor Interference Gases

	OX-1 & 5 ppm	OX-2 ppm	OX-3 %		OX-4 %	
Gas	**Cont.**	**Cont.**	**Cont.**	**Int. (1)**	**Cont.**	**Int.**
H_2S	<5 ppm	<10 ppm	0.0005 %	0.01 %	0.001 %	0.1 %
SO_3	<10 ppm	<10 ppm	0.01 %	0.1 %	0.01 %	0.1 %
SO_2	<10 ppm	(3)	0.01 %	0.1 %	(3)	(3)
HCl	<1000 ppm	(3)	0.1 %	1.0 %	(3)	(3)
HCN	<1000 ppm	(3)	0.1 %	1.0 %	(3)	(3)
CO_2	<1000 ppm	(3)	0.1 %	20 &	(3)	(3)
NO_2	(2)	(2)	(2)	(2)	(2)	(2)
Cl_2	(2)	(2)	(2)	(2)	(2)	(2)

Cont. = Continuous, Int. = Intermittent

(1) Recommended maximum exposure 30 minutes, followed by flushing with ambient air for an equal period.

(2) Minimal effect on sensor performance, but produces signal interference of 1:2 ratio for ppm levels only (e.g., 100 ppm NO_2 looks like 200 ppm O2).

(3) Minimal effect on sensor performance

Chapter 2. Installation

2.1 Mounting the oxy.IQ

To install the **oxy.IQ** into the process or sample system, refer to *Figure 9 on page 38* and/or *Figure 2* below and proceed to the next page.

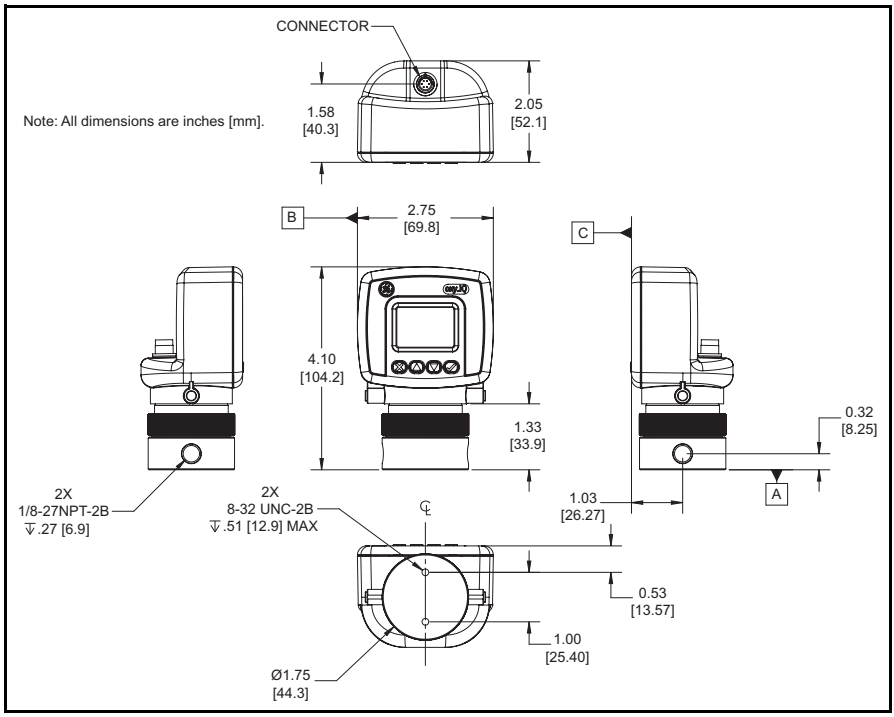

Figure 2: Outline and Dimensions (ref. dwg. 712-1840)

Note: *To avoid collecting condensate that may damage the oxygen sensor, mount the oxy.IQ in an upright position, with the sensor manifold below the electronics module.*

2.1 Mounting the oxy.IQ (cont.)

Install the oxy.IQ by completing the following steps:

1. Remove the oxy.IQ and the separately-packaged oxygen sensor (see *Figure 3* below) from the shipping container. Keep the shipping container and packaging material for possible future use.

IMPORTANT: *DO NOT open the oxygen sensor package until you are ready to install the sensor.*

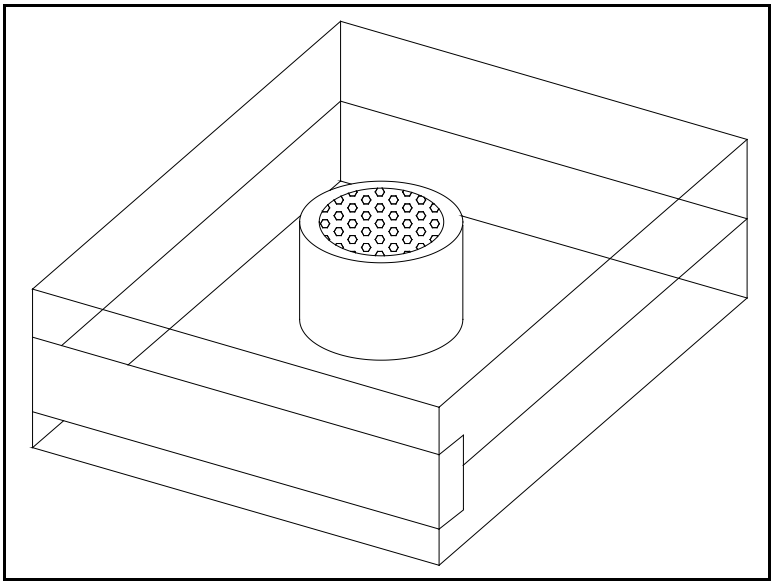

Figure 3: Packaged Oxygen Sensor

2. Remove the sensor manifold by unscrewing it from the blue knurled nut on the sensor base at the bottom of the electronics module.

2.1 Mounting the oxy.IQ (cont.)

IMPORTANT: *The maximum operating pressure for the oxy.IQ is 10 psi, and the burst pressure of the unit is 200 psi. Be sure the sample conditioning system is designed to maintain the oxy.IQ pressure below these limits, and that the oxy.IQ outlet is vented to atmosphere during operation and calibration.*

3. Using PTFE tape as a sealant, connect the sample gas inlet and outlet to the 1/8" NPT ports on the sensor manifold (see *Figure 4* below). Either port may be used as the inlet or the outlet, as the direction of flow does not matter.

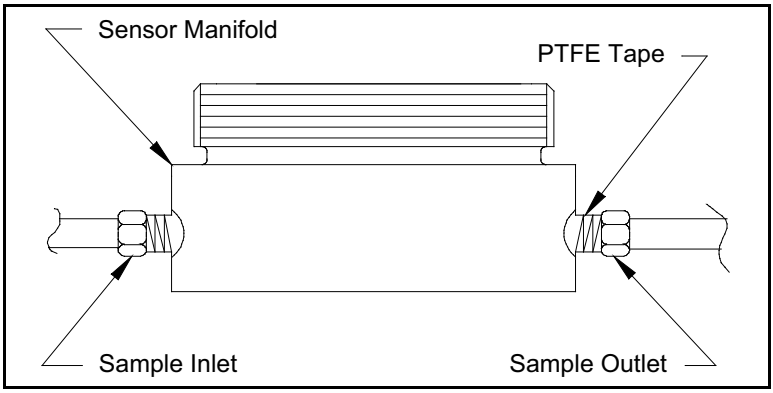

Figure 4: Sensor Manifold Installation

2.2 Wiring the oxy.IQ

To wire the oxy.IQ, refer to *Figure 14 on page 43*, then proceed as follows:

WARNING! For IS (Intrinsically Safe) applications, the oxy.IQ must be installed with a Zener barrier (see the top of *Figure 14 on page 43*). Also, for installations in a hazardous location, the blue IS cable (p/n 704-1318-02, 10) must be used.

1. Attach the appropriate cable to the oxy.IQ (see *Figure 5* below). Be sure to align the white arrow on the cable connector with the white arrow on the oxy.IQ connector, and then push the top of the cable connector straight down onto the mating connector on the rear of the electronics module until you hear it click into place.

IMPORTANT: *Do not rotate the cable connector during installation (it is not threaded) and do not hold the connector by its bottom section while pushing it down into place.*

IMPORTANT: *To remove the cable, grasp the bottom section of the connector (the part with the white arrow) and pull it straight up until the cable comes loose.* **DO NOT** *twist the connector either by hand or with any tool during removal.*

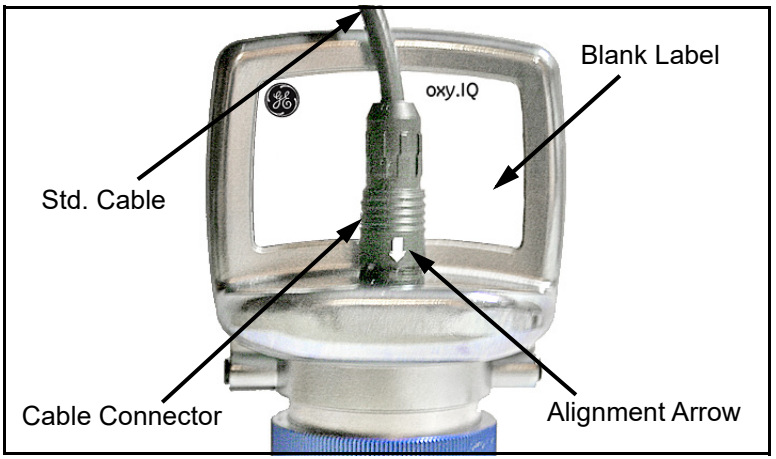

Figure 5: oxy.IQ Cable and Connector

2.2 Wiring the oxy.IQ (cont.)

2. Connect the flying lead end of the cable as shown in the wiring diagram, according to one of the following conditions:

- ***No Zener Barrier or Galvanic Isolator:***
  For use in non-hazardous areas or Div 2 hazardous areas.
- ***With Zener Barrier or Galvanic Isolator:***
  Required for use in hazardous areas.

IMPORTANT: *To remove the cable from the oxy.IQ electronics module, simply pull straight up on the lower section of the cable connector as close to the oxy.IQ body as possible. Do not pull on the cable or the upper portion of the cable connector, and do not try to unscrew the cable connector.*

2.2.1 Longer Cable Lengths

GE offers cables in 2 m and 10 m standard lengths. Longer cable lengths may be used with the oxy.IQ, but these are not available from GE. If you require a longer cable, refer to the following figures for the required cable specifications and construct your own cable for splicing onto the standard GE cable:

- **Standard Cable:** *Figure 10 on page 39* and *Figure 11 on page 40*
- **IS Cable:** *Figure 12 on page 41* and *Figure 13 on page 42*

2.3 Installing an Oxygen Sensor

To install a new or replacement oxygen sensor in the oxy.IQ, refer to *Figure 6* below and complete the following steps:

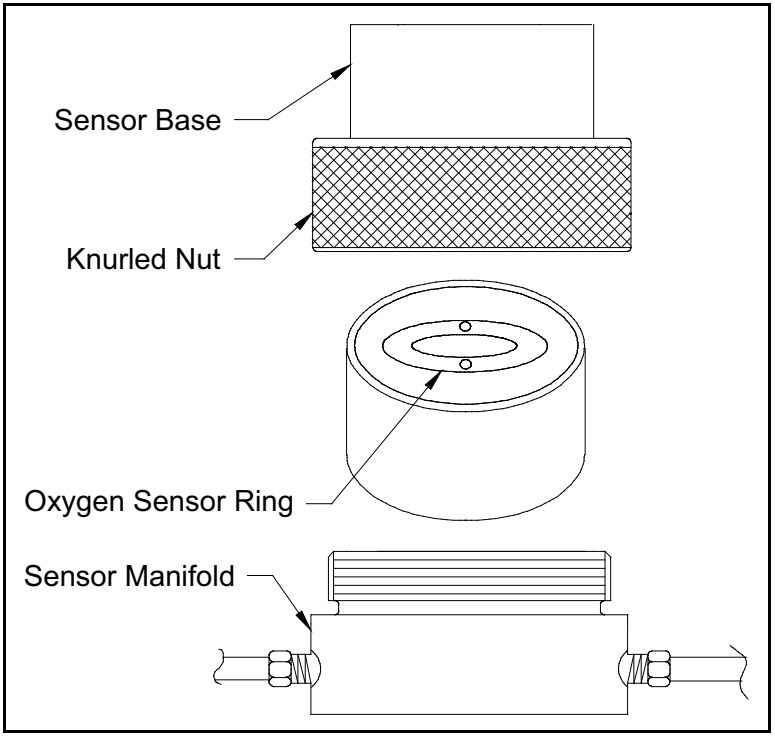

Figure 6: Oxygen Sensor Installation

1. Disconnect the power from the oxy.IQ.
2. Loosen the blue knurled nut and remove the oxy.IQ electronics module from the sensor manifold. If a previous oxygen sensor is already in place, remove and discard it.

2.3 Installing an Oxygen Sensor (cont.)

3. Apply power to the unit. The screen will display **"INITIALIZING PLEASE WAIT"** for a few seconds before it begins to display measurement data.

Note: *Before continuing with the installation, become familiar with the procedures for programming and calibrating the oxy.IQ discussed in* Chapter 3, Initial Setup & Operation.

4. Trim the 4-20 mA analog output and set the range to 0-25% oxygen.

5. Open the airtight package (see *Figure 3 on page 6*) and remove the oxygen sensor from the package. To maintain the oxygen sensor's energy level, remove the red grounding tab and **immediately** install the sensor in the oxy.IQ

6. Orient the sensor so that its gold-plated electrodes are facing the spring-loaded contact pins in the sensor base (see *Figure 6 on page 10*). Firmly press the oxygen sensor into the sensor base at the bottom of the oxy.IQ electronics module.

7. Perform an air calibration on the new oxygen sensor at this time. On the 0-25% oxygen scale, a properly calibrated oxygen sensor shows a reading of 20.9% on the display and generates a current of 17.4 mA at the 4-20 mA analog output terminals.

8. Using the blue knurled nut, attach the oxy.IQ electronics module with the calibrated oxygen sensor to the sensor manifold. Rotate the display as desired and then hand-tighten the blue knurled nut.

IMPORTANT: *Make sure that the O-ring on the top of the sensor manifold is in place and undamaged. If necessary, contact GE for a replacement.*

2.3 Installing an Oxygen Sensor (cont.)

9. Begin the flow of the process gas. The analog output reading will drop as the oxygen sensor adjusts to the reduced oxygen level. During this time, reset the range as required.

10. For improved accuracy in the ppm oxygen ranges, a span gas calibration should now be performed (see *"Span Gas Calibration" on page 19*).

IMPORTANT: *Sensor life is dependent on the application. High oxygen concentrations and contaminants such as acidic gases will shorten the sensor life.*

Chapter 3. Initial Setup & Operation

3.1 The oxy.IQ Display and Keypad

All programming of the **oxy.IQ** is done via the front panel keypad and display, as illustrated below.

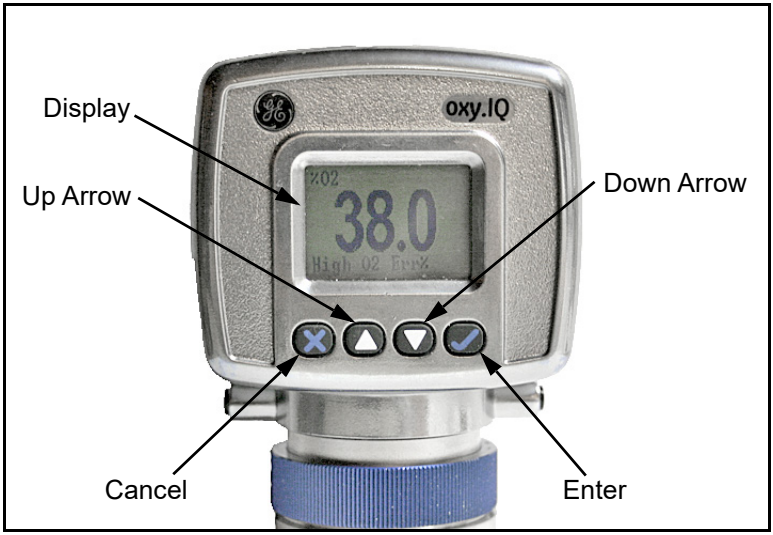

Figure 7: oxy.IQ Display and Keypad

The front panel components perform the following functions:

- **Display** - Data measurements and the programming menus and options are shown on the LCD display screen.
- **Enter** - While in measurement mode, press this key to enter the Main Menu. While in the *Main Menu*, press this key to save an entry and advance to the next screen.
- **Cancel** - While in the *Main Menu*, press this key to cancel an entry and to return to the previous screen.
- ▲ and ▼ **Keys** - In the *Main Menu*, use these keys to move the cursor between rows one row at a time in the direction indicated.

3.2 The oxy.IQ Menu Map

As an aid in navigating through the *Main Menu*, a complete *Menu Map* of the user program is shown in *Figure 16 on page 46*. Refer to this figure as needed while programming the oxy.IQ.

The oxy.IQ Main Menu consists of the following submenus:

- Calibration Menu (no passcode required)
- Display Menu (no passcode required)
- Output Menu (no passcode required)
- Service Menu (factory service passcode required)

To enter the *Main Menu* from normal display mode, simply press the **Enter** key at any time. To leave the *Main Menu* and return to measurement mode, press the **Cancel** key.

Note: *Depending on how deep you are in the menu structure, it may be necessary to press the* **Cancel** *key more than once to return all the way back to measurement mode.*

3.3 Adjusting and Calibrating the oxy.IQ

Upon startup, the following five-step adjustment and calibration procedure must be performed on the oxy.IQ:

1. Select the desired output range.
2. Trim the low (4 mA) and high (20 mA) analog outputs.
3. Upon installation of a new oxygen sensor, calibrate the unit with air for either a ppm or % sensor.
4. For ppm sensors only, purge the sensor with a low ppm oxygen gas.
5. For all subsequent calibrations, use a span gas that is appropriate for the sensor and range selected.

3.3.1 Selecting the Output Range

To select the desired measurement range, complete the following steps:

1. Press the **Enter** key to enter the *Main Menu*.
2. Press the ▼ key twice and then press the **Enter** key to enter the *Output* menu.
3. Press the **Enter** key to select the *Range* menu option.
4. Use the ▲ and ▼ keys to scroll through the available options, as listed in *Table 2* below.

Table 2: Available Output Ranges

Units	Span Value
% O2	1, 2, 5, 10, 21, 25, 50, 100
ppm O2	10, 20, 50, 100, 200, 500, 1000, 2000, 5000, 10000

5. After selecting the desired output range, press the **Enter** key to save the selection. Then, press the **Cancel** key to return to the *Output* menu.

3.3.2 Trimming the Analog Output

To trim the analog output, calibrate the low (4 mA) end of the output then the high (20 mA) end of the output.

IMPORTANT: *The 4 mA and 20 mA adjustments interact with each other. Therefore, recheck the trim after the procedure has been completed.*

3.3.2a Preparing to Trim the Analog Output

Prepare to trim the analog output as follows:

1. Connect an ammeter in series with the positive oxy.IQ power supply lead, to monitor the analog output current.
2. Press the **Enter** key to enter the *Main Menu*.
3. Press the ▼ key twice and then press the **Enter** key to enter the *Output* menu.
4. Press the ▼ key and then press the **Enter** key to enter the *Trim* menu.

3.3.2b Trimming the Analog Output Low (4 mA) End

1. Press the **Enter** key to enter the *4 mA Trim* menu, and the analog output is driven to about 4 mA.
2. Use the ▲ and ▼ keys to adjust the analog output up or down, until it equals 4.00 ± 0.01 mA.
3. Press the **Enter** key to save the trim adjustment and return to the *Trim* menu.

3.3.2c Trimming the Analog Output High (20 mA) End

1. Press the ▼ key and then press the **Enter** key to enter the *20 mA Trim* menu, and the analog output is driven to about 20 mA.
2. Use the ▲ and ▼ keys to adjust the analog output up or down, until it equals 20.00 ± 0.01 mA.
3. Press the **Enter** key to save the trim adjustment and return to the *Trim* menu.

3.3.2d Completing the Trim Procedure

1. Repeat both the low (4 mA) end and high (20 mA) end analog output trimming steps until no further trimming adjustments are required.
2. Press the **Cancel** key twice to return to the *Main Menu*.

3.3.3 Air Calibration

An air calibration is always recommended upon installation of a new oxygen sensor. However, because of the non-linearity of the oxygen sensor, a span gas calibration (see the next section) can also be performed to ensure a faster and more accurate calibration for the ppm ranges.



CAUTION! The useful life of ppm sensors is extended by minimizing exposure of the sensor to air.

To perform an air calibration, complete the following steps:

1. Press the **Enter** key to enter the *Main Menu*.
2. Press the **Enter** key to enter the *Calibration* menu.
3. Press the **Enter** key to select the *Air* menu option.
4. Proceed to the appropriate section, depending on whether you are calibrating a new sensor or recalibrating an existing sensor.

3.3.3a Calibrating a New Sensor

For a new sensor, continue the air calibration procedure as follows:

1. Press the ▼ key and then press the **Enter** key to select the *YES* menu option.
2. Press the **Enter** key to acknowledge that you are resetting the *sensor lifetime clock*.
3. As instructed, remove the sensor manifold to expose the new oxygen sensor to ambient air for about two minutes. Then, press the **Enter** key to continue.
4. A message indicating that the calibration is in progress will be displayed, and then the calibration data will be shown. At that time, press the **Enter** key to save the calibration data and return to measurement mode.

Note: A *second calibration of the new sensor should be performed within 1-2 days of the first calibration.*

3.3.3b Recalibrating an Existing Sensor

For an existing sensor, continue the air calibration procedure as follows:

1. Press the **Enter** key to select the *NO* menu option.
2. As instructed, remove the sensor manifold to expose the oxygen sensor to ambient air for about two minutes. Then, press the **Enter** key to continue.
3. A message indicating that the calibration is in progress will be displayed, and then the calibration data will be shown. At that time, press the **Enter** key to save the calibration data and return to measurement mode.

3.3.4 Span Gas Calibration

Before beginning the span gas calibration, make sure the oxy.IQ is indicating an O_2 level less than the span gas value, to ensure an accurate calibration. Then, start the flow of the span gas to the sensor. For accurate calibration, the span gas should have an oxygen content of 70-90% of the range being calibrated.

To perform the span calibration, complete the following steps:

1. Use the equation below to calculate the expected mA output that corresponds to the known oxygen content of the span gas:

$$4.0 + 16.0 \times \frac{\text{Span Gas ppm}}{\text{Full Range ppm}} = \text{mA Output}$$

   For example, if the span gas contains 80 ppm oxygen and the 0-100 ppm range is being calibrated, the analog output should equal 4 + 16 x (80/100) = 16.8 mA.

2. If you have not done so already, start the flow of span gas to the sensor and allow both the 4-20 mA output reading and the display reading to stabilize.

3. After the reading has stabilized, press the **Enter** key to enter the *Main Menu*.

4. Press the **Enter** key to enter the *Calibration* menu.

5. Press the ▼ key and then press the **Enter** key to select the *Span Gas* menu option.

6. Press the ▲ and ▼ keys until the measurement agrees with the span calibration gas value.

7. Confirm that the reading on the display has stabilized, and press the **Enter** key to save the calibration. Then, press the **Cancel** key twice to return to measurement mode.

[no content intended for this page]

Chapter 4. User Programming

4.1 Introduction

IMPORTANT: *The oxy.IQ* Service *menu is for use by qualified service personnel only and requires a special passcode for access. That menu is not discussed in this chapter.*

This chapter provides instructions for programming all of the oxy.IQ menu options available to the user, which can be accessed without the use of a passcode. These menu options are found in the following *Main Menu* submenus:

- Calibration Menu
- Display Menu
- Output Menu

While programming these menus, refer to the menu map in *Figure 16 on page 46*.

Note: *The menu options for initial setup are described in Chapter 3,* Initial Setup & Operation*, and are only referenced in this chapter.*

4.2 The Calibration Menu

Proceed to the appropriate section to program the desired menu option.

4.2.1 Air

See *"Air Calibration" on page 17*.

4.2.2 Span Gas

See *"Span Gas Calibration" on page 19*.

4.2.3 Sensor Life

To read the sensor life, complete the following steps:

1. Press the **Enter** key to enter the *Main Menu*.
2. Press the **Enter** key to enter the *Calibration* menu.
3. Press the ▼ key three times and then press the **Enter** key to enter the *Sensor Life* menu.
4. The number of days your sensor has been in use is displayed.

   When you have finished reading the information, press the **Enter** key to return to the *Calibration* menu.
5. Press the **Cancel** key twice to return to measurement mode.

4.3 The Display Menu

Proceed to the appropriate section to program the desired menu option.

4.3.1 Select the O2 Parameter

To select the O2 parameter for display, complete the following steps:

1. Press the **Enter** key to enter the *Main Menu*.
2. Press the ▼ key once and then press the **Enter** key to enter the *Display* menu.
3. Press the **Enter** key to enter the *O2* menu.
4. Use the ▲ and ▼ keys to select the desired O2 range to be displayed:
   - ppm only
   - % only
   - Auto Select (automatically displays the appropriate range)
5. Press the **Enter** key to confirm your choice and return to measurement mode.

4.3.2 Display the Sensor Range

To select whether or not the O2 range of the installed sensor is displayed, complete the following steps:

1. Press the **Enter** key to enter the *Main Menu*.
2. Press the ▼ key once and then press the **Enter** key to enter the *Display* menu.
3. Press the ▼ key once and then press the **Enter** key to enter the *Display Range* menu.
4. Use the ▲ and ▼ keys to select the desired option:
   - On - the O2 range is displayed at the bottom of the screen
   - Off - the O2 range is not displayed at the bottom of the screen
5. Press the **Enter** key to confirm your choice and return to measurement mode.

4.3.3 Adjust the Contrast

To adjust the display contrast, complete the following steps:

1. Press the **Enter** key to enter the *Main Menu*.
2. Press the ▼ key twice and then press the **Enter** key to enter the *Contrast* menu.
3. Use the ▲ and ▼ keys to adjust the contrast to the desired value, then press the **Enter** key to save the new value.
4. Press the **Cancel** key twice to return to measurement mode.

4.4 The Output Menu

Proceed to the appropriate section to program the desired menu option.

4.4.1 Range

See *"Selecting the Output Range" on page 15*.

4.4.2 Trim

See *"Trimming the Analog Output" on page 16*.

4.4.3 Error Type

To select the process conditions that will activate an on-screen warning and send an alarm to the analog output device, complete the following steps:

1. Press the **Enter** key to enter the *Main Menu*.
2. Press the ▼ key twice and then press the **Enter** key to enter the *Output* menu.
3. Press the ▼ key twice and then press the **Enter** key to enter the *Error Type* menu.

4.4.3 Error Type (cont.)

4. Use the ▲ and ▼ keys to select the desired option and then press the **Enter** key to activate that error type. A check mark will appear next to the selected option to indicate that it is activated. The following options are available, and you may activate as many of these options as you wish.

Note: *Only the first four options are displayed on the screen upon entering this menu. When you scroll down to the fourth option (Low Temp), a down arrow to the right of this option indicates that an additional screen of options is available.*

- High O2
- Low O2 (programmable)
- High Temp
- Low Temp (programmable)
- Temp Comp (listed on second screen of options)

Note: *Pressing the* **Enter** *key on an error type that has already been activated, will deactivate that option and remove the check mark.*

5. Press the **Cancel** key three times to return to measurement mode.

4.4.4 Error Output

To select the desired output value that will be sent to the analog output device upon an error, complete the following steps:

1. Press the **Enter** key to enter the *Main Menu*.
2. Press the ▼ key twice and then press the **Enter** key to enter the *Output* menu.
3. Press the ▼ key three times and then press the **Enter** key to enter the *Error Output* menu.
4. Use the ▲ and ▼ keys to select the desired option and then press the **Enter** key to activate that error output. A check mark will appear next to the selected option to indicate that it is activated. The following options are available, and you may activate only one option at a time.

Note: *Only the first four options are displayed on the screen upon entering this menu. When you scroll down to the fourth option (***NAMUR***), a down arrow to the right of this option indicates that an additional screen of options is available.*

- None (no error output is generated)
- Low (an output of 4 mA is generated)
- High (an output of 20 mA is generated)
- Value (an error output at a programmable fixed value is generated)
- NAMUR (listed on second screen of options)

Note: *Pressing the* **Enter** *key on a different error output will automatically deselect any previously selected output.*

5. Press the **Cancel** key three times to return to measurement mode.

[no content intended for this page]

Chapter 5. The Service Menu



CAUTION! The *Service Menu* is intended for use by qualified service personnel only, and access to this menu requires entry of the service passcode. Misuse of the information in this menu may significantly impair the accuracy and performance of your oxy.IQ and may cause it to fail to meet its published specifications.

5.1 Menu Map & Service Passcode

For help in navigating through the *Service Menu*, refer to the menu map shown in *Figure 17 on page 47*. The *service passcode* required for access to the oxy.IQ *Service Menu* is:

7378

5.2 Entering the Service Menu

To enter the *Service Menu*, complete the following steps:

1. Press the **Enter** key to enter the *Main Menu*.
2. Press the ▼ key three times and then press the **Enter** key to select the *Service* menu.
3. Use the ▲ and ▼ keys to increment or decrement the displayed value (default = 5000) to enter the *service passcode*, and then press the **Enter** key to access the *Service* menu.

Note: *When entering the passcode, press and release an arrow key to change the value one digit at a time, or press and hold an arrow key to change the value at an accelerating rate.*

4. Proceed to the appropriate section for the desired menu option.

5.2.1 Diagnostics

To enter the *Diagnostics* menu option from the *Service Menu*, complete the following steps:

1. Use the ▲ and ▼ keys as necessary to highlight the *Diagnostics* menu option.
2. Press the **Enter** key to enter the *Diagnostics* menu.
3. *Page 1* of the *Diagnostics* option displays the current values for the following parameters:
   - O2 µA
   - Output mA
   - Output %

   When you have finished reading the information, press the **Enter** key to move to *Page 2* of the *Diagnostics* menu or press the **Cancel** key to exit the *Diagnostics* menu.
4. *Page 2* of the *Diagnostics* option displays the current values for the following parameters:
   - Temp °C
   - Temp Res
   - Gain
   - OX-n (currently installed sensor type, n = 1, 2, 3 or 4)

   When you have finished reading the information, press the **Enter** key to move to *Page 1* of the *Diagnostics* menu or press the **Cancel** key to exit the *Diagnostics* menu.
5. Press the **Cancel** key twice to return to measurement mode.

Chapter 6. Specifications

6.1 Intrinsically Safe (IS) Installation

Intrinsically safe installations require an MTL7706 zener barrier, one IS cable, and one non-IS cable.

Power Requirements

24 to 28 VDC at 50 mA

Cable

p/n 704-1318-02 (2 m length) or *p/n 704-1317-10* (10 m length) blue jacketed, twisted-pair with connector, 26 AWG conductors, with connector

Output

Total load must equal 250 Ω ±5% when using a zener barrier

6.2 Non-Incendive (Div 2) and General Purpose Installation

No zener barrier or galvanic isolator is used.

Power Requirements

9 to 28 VDC, loop-powered, 0.7 W max

Cable

p/n 704-1317-02 (2 m length) or *p/n 704-1317-10* (10 m length) black jacketed, twisted-pair with connector, 26 AWG conductors, with connector

6.3 All Installations

Process Wetted Materials

SS process unit: 316 stainless steel, Viton® O-ring, gold-plated sensor electrical contacts, and glass

User-Selectable Measurement Ranges

- *PPM sensors:*
  - 0 to 10 ppm_v O_2 (OX-1 or OX-2 only)
  - 0 to 20 ppm_v O_2 (OX-1 or OX-2 only)
  - 0 to 50 ppm_v O_2 (OX-1 or OX-2 only)
  - 0 to 100 ppm_v O_2
  - 0 to 200 ppm_v O_2
  - 0 to 500 ppm_v O_2
  - 0 to 1000 ppm_v O_2
  - 0 to 2000 ppm_v O_2
  - 0 to 5000 ppm_v O_2
  - 0 to 10,000 ppm_v O_2
- *Percent sensors:*
  - 0% to 1% O_2
  - 0% to 2% O_2
  - 0% to 5% O_2
  - 0% to 10% O_2
  - 0% to 25% O_2
  - 0% to 50% O_2

Accuracy

- ±1% of range at calibration point
- ±2% of range at the calibration point for the 0 to 10 ppm_v O_2 range (OX-1, 2)

6.3 All Installations (cont.)

Repeatability

- ±1% of range
- ±2% of range for the 0 to 10 ppm_v O_2 range (OX-1, 2)

Resolution

±0.1% of range

Linearity

- ±2% of range (OX-1, 2, 3, 5)
- ±5% of range (OX-4)

O_2 Sensor Operating Temperature

32°F to 113°F (0°C to 45°C)

Sample Pressure

Vented to atmosphere during operation and calibration

Atmospheric Pressure Effect

±0.13% of reading per mmHg (directly proportional to absolute pressure)

Note: *During calibration, pressure and flow must be kept constant.*

Process Connections

1/8” NPT-F inlet and outlet

Dimensions

4.10 x 2.75 x 2.05 in. (104.1 x 69.9 x 52.1 mm)

Weight

1.35 lb (612 grams)

6.3 All Installations (cont.)

Sample Flow Rate

1.0 SCFH (500 cc/min) recommended for process units

Electrical Classification

Intrinsically Safe package with zener barrier or galvanic isolator:

- *USA/Canada:*
  IS for Class I, Div 1, Groups A, B, C, D; T4
  IS for Class I, Zone 0, AEx ia IIC T4; Tamb -20 to +60°C
- *EU ATEX:*
  II 1 G ia IIC Ga
  IECEx Ex ia IIC T4; Tamb -20 to +60°C

Intrinsically safe package for non-incendive (Div 2) application without use of zener barrier or galvanic isolator:

- *USA/Canada:*
  Class I, Div. 2, Groups A, B, C, D; T4
- *ATEX/IECEx:*
  Ex na IIC T4

European Compliance

See the *EU Declaration of Conformity* at the back of this manual

6.4 Product Label

A typical product label is shown in *Figure 8* below:

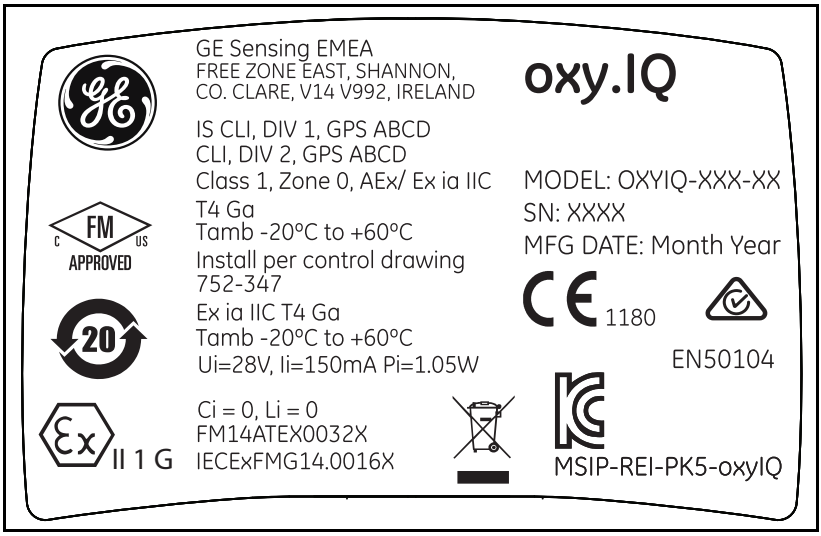

Figure 8: oxy.IQ Label - IS Package Option

[no content intended for this page]

Appendix A. Outline and Installation Drawings

This appendix includes the following **oxy.IQ** drawings:

- “Outline & Installation (ref. dwg. 712-1840)” on page 38
- “Cable, Standard (ref. dwg. 704-1317, SH 1 of 2)” on page 39
- “Cable, Standard (ref. dwg. 704-1317, SH 2 of 2)” on page 40
- “Cable, IS (ref. dwg. 704-1318, SH 1 of 2)” on page 41
- “Cable, IS (ref. dwg. 704-1318, SH 2 of 2)” on page 42
- “Wiring Options (ref. dwgs. 702-285 & 702-286)” on page 43
- “Schematic Diagram (ref. dwg. 752-347)” on page 44

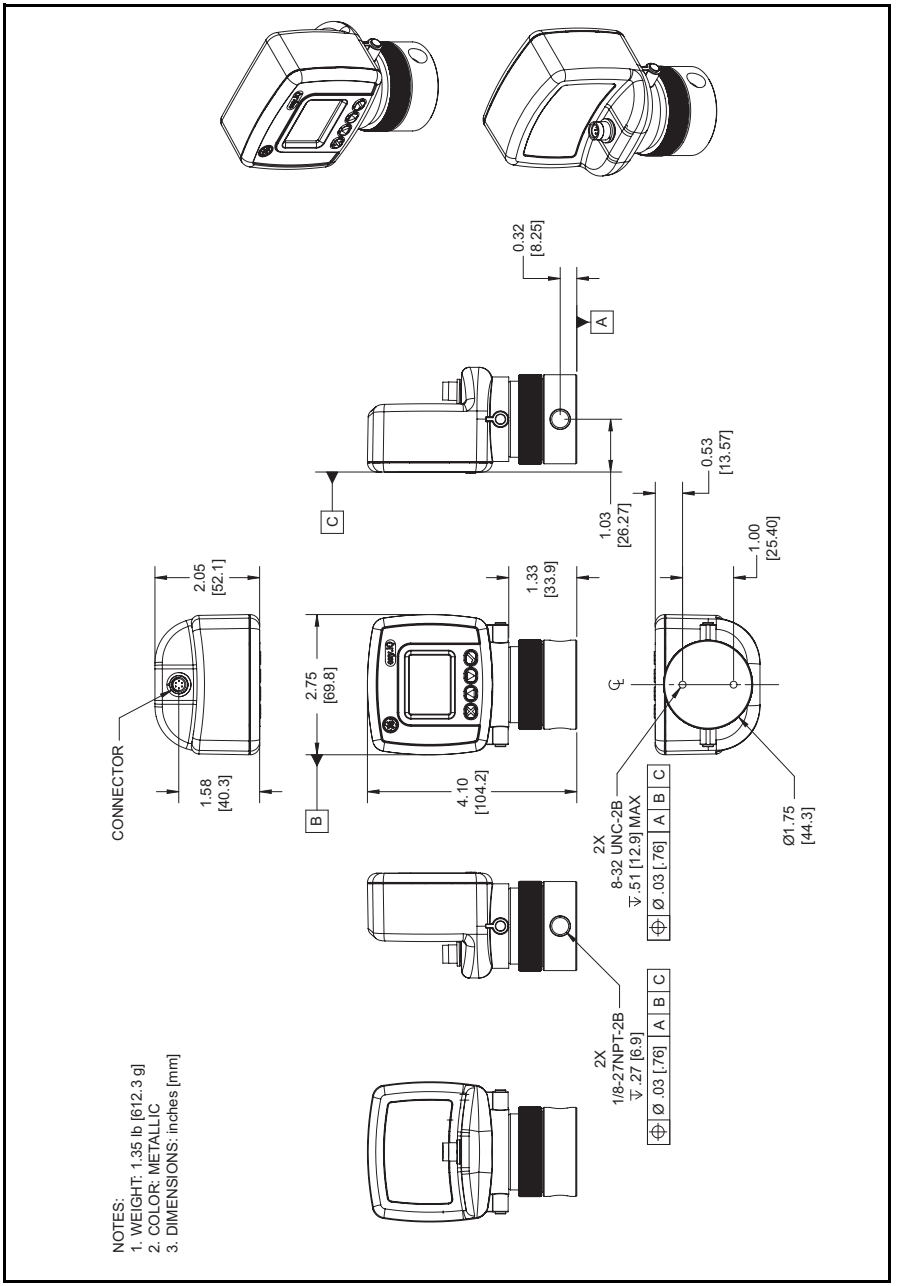

Figure 9: Outline & Installation (ref. dwg. 712-1840)

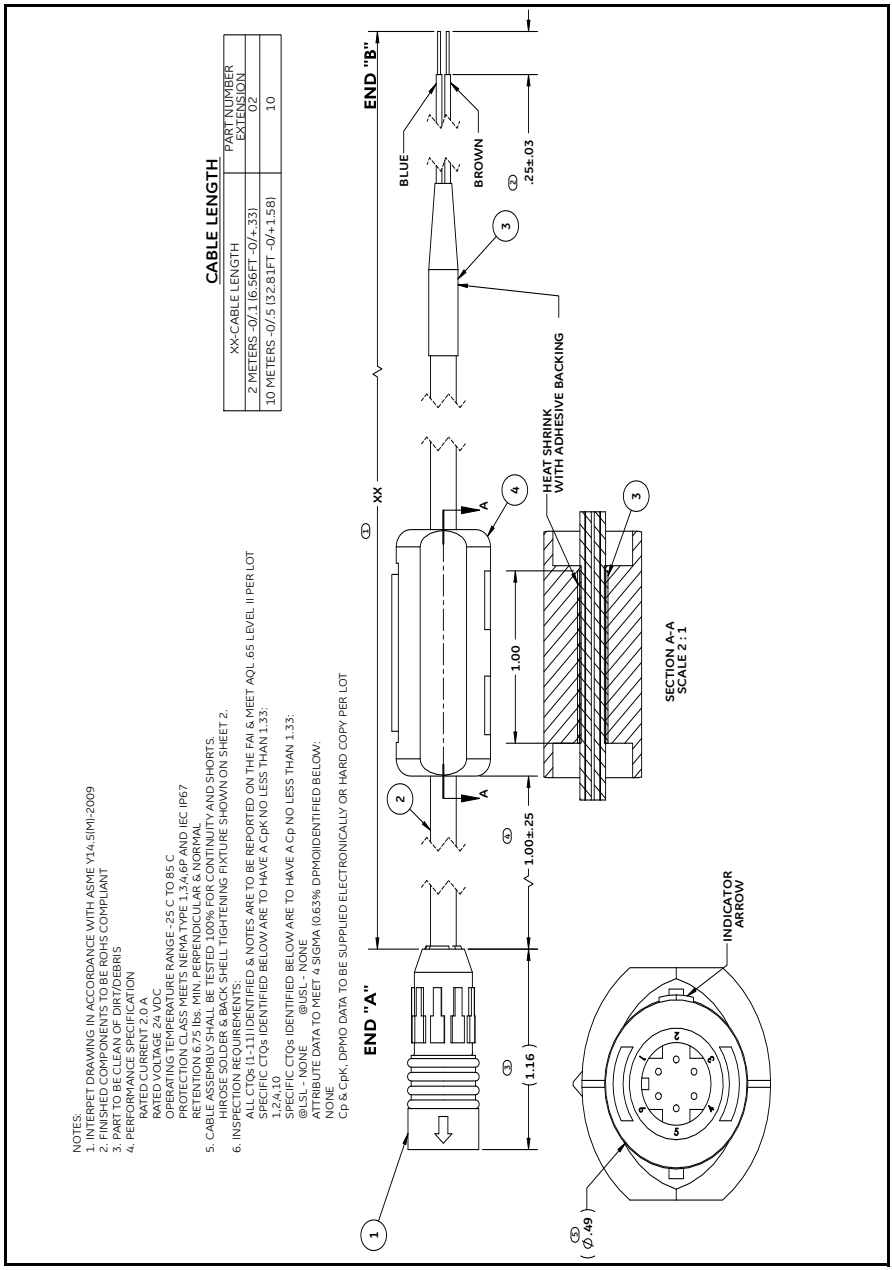

Figure 10: Cable, Standard (ref. dwg. 704-1317, SH 1 of 2)

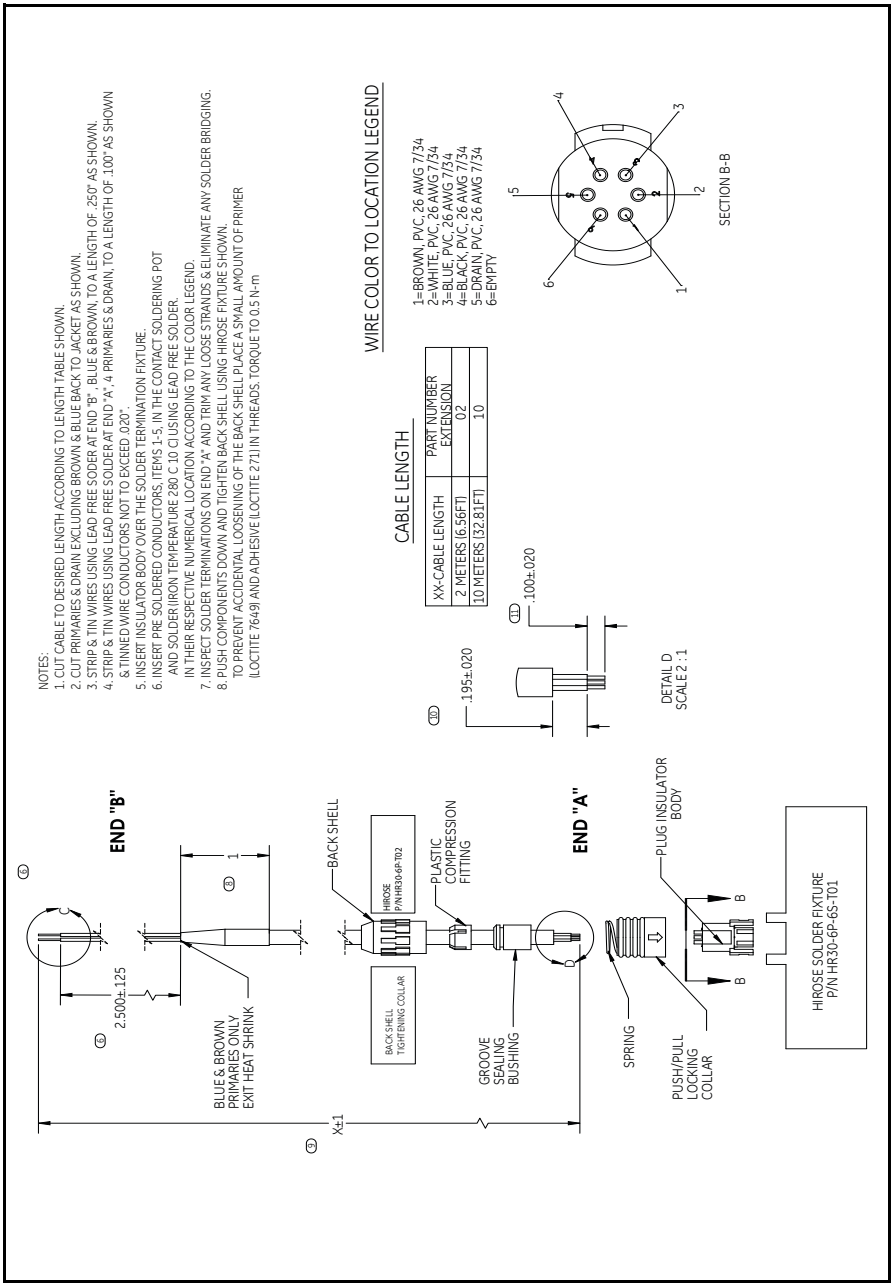

Figure 11: Cable, Standard (ref. dwg. 704-1317, SH 2 of 2)

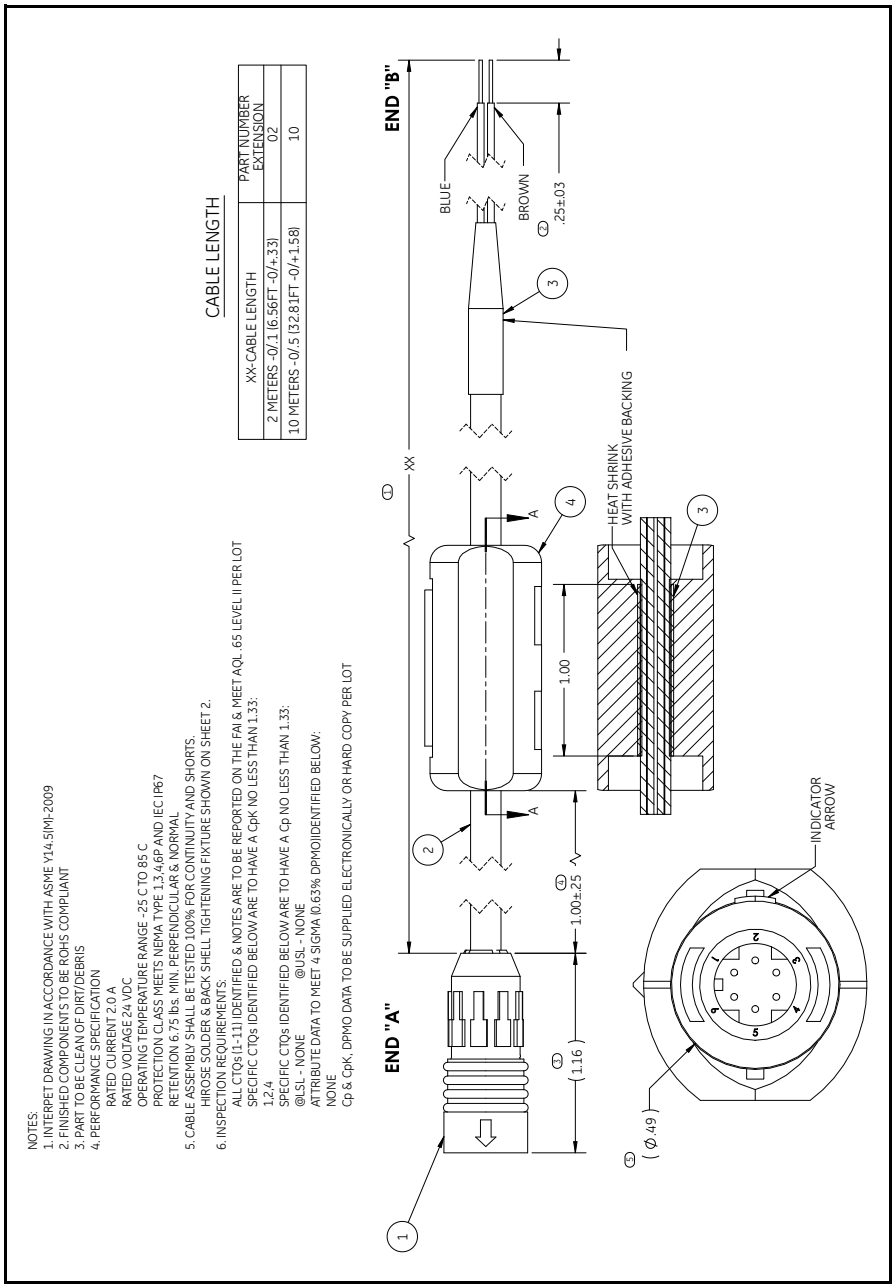

Figure 12: Cable, IS (ref. dwg. 704-1318, SH 1 of 2)

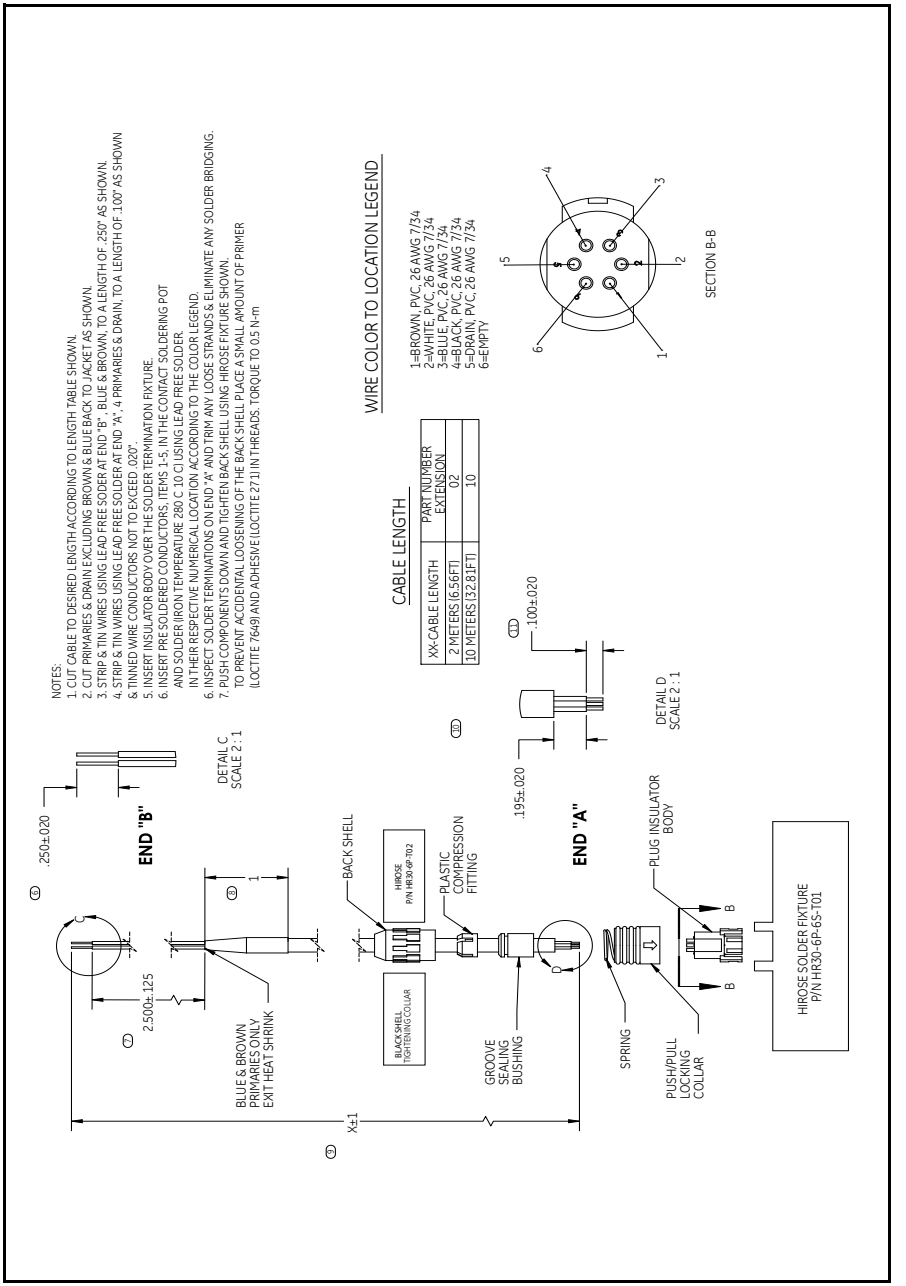

Figure 13: Cable, IS (ref. dwg. 704-1318, SH 2 of 2)

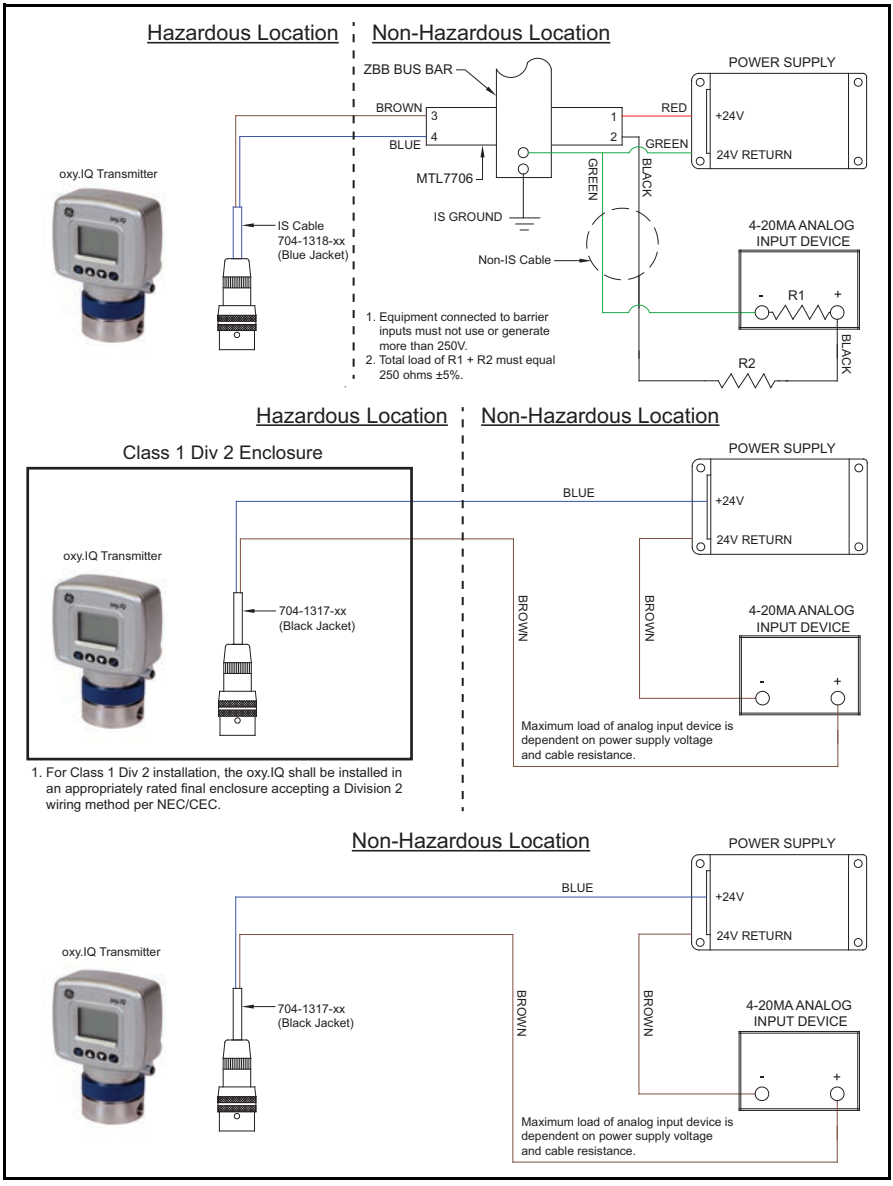

Figure 14: Wiring Options (ref. dwgs. 702-285 & 702-286)

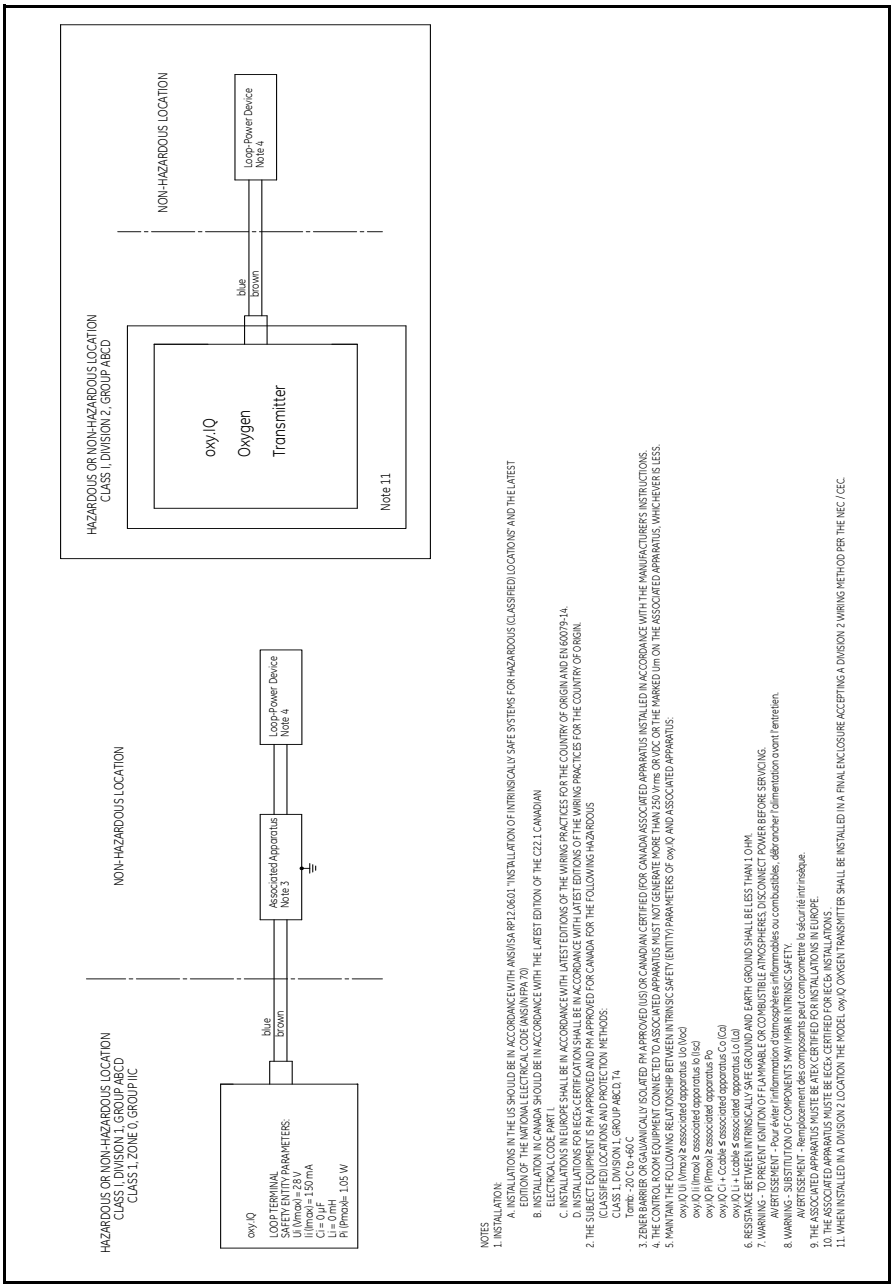

Figure 15: Schematic Diagram (ref. dwg. 752-347)

Appendix B. Menu Maps

This appendix includes the **oxy.IQ** User Menu Maps (please note the Service Menu Map is available to qualified BHGE field service personnel only).

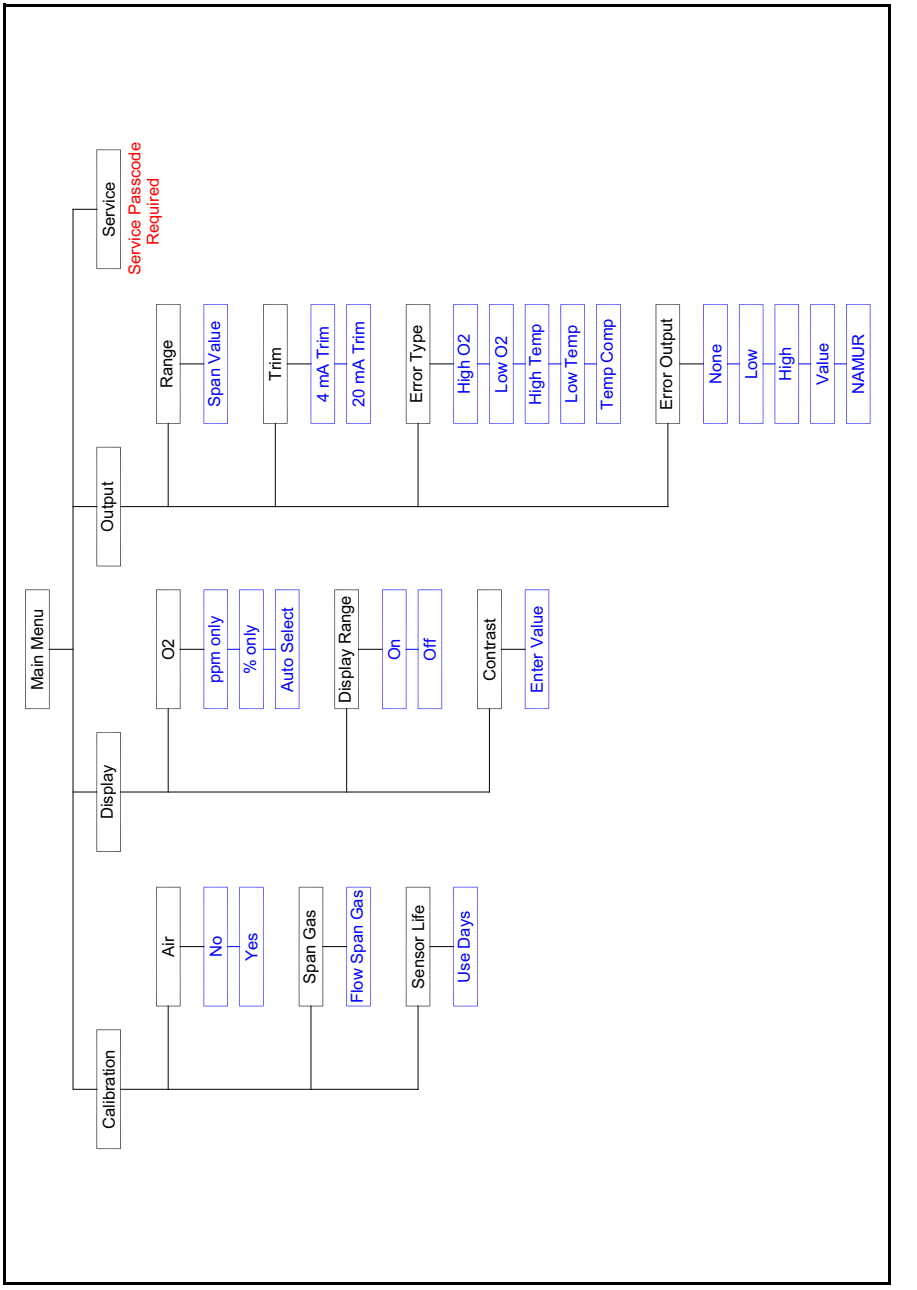

Figure 16: User's Menu Map

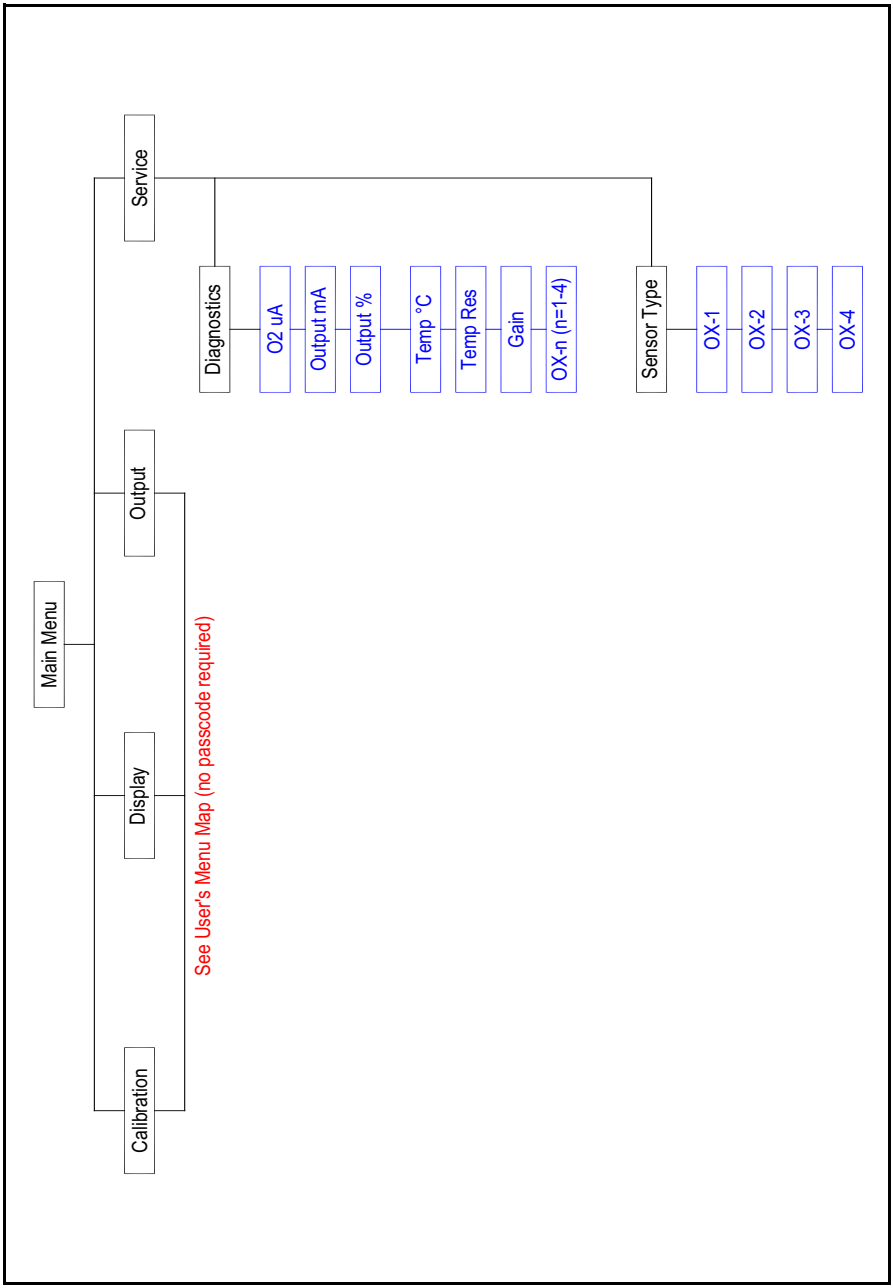

Figure 17: Service Menu Map

[no content intended for this page]

Appendix C. Order String

oxy.IQ BCD-E

A	Model Only				
	oxy.IQ Oxygen Transmitter; 4 to 20 mA output				
	B	Sensor			
	0	No sensor			
	1	Standard ppm, 0 to 10, 20, 50, 100, 200, 500, 1000 ppm			
	2	Acid ppm, 0 to 10, 20, 50, 100, 200, 500, 1000 ppm			
	3	Standard percent sensor			
	4	Acid percent sensor			
	5	Standard ppm, 0 to 100, 200, 500 and 1000 ppm			
		C	Package		
		1	Standard Package		
		3	Intrinsically safe (US/CAN Class 1 Div 1) or Non-incendive (US/CAN Class 1 Div 2)		
		4	Ex flameproof		
			D-	Cable Length	
			0	No cable	
			1	2 meter cable	
			2	10 meter cable	
				E	Zener Barrier
				0	None
				1	Zener barrier
				2	Galvanic isolator.
				Note:	*For Class 1 Div 1 either zener barrier or galvanic isolator must be selected. For Class 1 Div 2, no barriers neeed. Please refer to dwg 752-347 for installation guidelines.*
Example part number: oxy.IQ 132-1					

[no content intended for this page]

Appendix D. Certifications

The following oxy.IQ certifications are included in this appendix:

- “ATEX EU-Type Examination Certificate” on page 52
- “ATEX IECEx MAM Ex Certificate” on page 56
- “Canadian Certificate of Compliance” on page 58
- “FM Certificate of Compliance” on page 61
- “IECEx Certificate of Conformity” on page 64

D.1 ATEX EU-Type Examination Certificate

1 **EU-TYPE EXAMINATION CERTIFICATE**

2 **Equipment or Protective systems intended for use in Potentially Explosive Atmospheres - Directive 2014/34/EU**

3 **EU-Type Examination Certificate No:** **FM14ATEX0032X**

4 **Equipment or protective system: (Type Reference and Name)** **Model oxy.IQ Oxygen Transmitter**

5 **Name of Applicant:** **GE Infrastructure Sensing**

6 **Address of Applicant:** **1100 Technology Park Drive**
Billerica, MA 01821
USA

7 This equipment or protective system and any acceptable variation thereto is specified in the schedule to this certificate and documents therein referred to.

8 FM Approvals Ltd, notified body number 1725 in accordance with Article 17 of Directive 2014/34/EU of 26 February 2014, certifies that this equipment has been found to comply with the Essential Health and Safety Requirements relating to the design and construction of equipment intended for use in potentially explosive atmospheres given in Annex II to the Directive.

The examination and test results are recorded in confidential report number:

3047174 dated 23rd February 2015

9 Compliance with the Essential Health and Safety Requirements, with the exception of those identified in item 15 of the schedule to this certificate, has been assessed by compliance with the following documents:

EN 60079-0:2012 +A11:2013 and EN 60079-11:2012

10 If the sign 'X' is placed after the certificate number, it indicates that the equipment is subject to specific conditions of use specified in the schedule to this certificate.

11 This EU-Type Examination certificate relates only to the design, examination and tests of the specified equipment or protective system in accordance to the directive 2014/34/EU. Further requirements of the Directive apply to the manufacturing process and supply of this equipment or protective system. These are not covered by this certificate.

12 The marking of the equipment or protective system shall include:

II 1 G Ex ia IIC T4 Ga; Tamb = -20˚C to +60˚C

cn=Mick Gower, o=FM Approvals, ou, email=mick.gower@fmapprovals.com, c=GB
2017.06.15 15:41:12 +01'00'

Mick Gower
Certification Manager, FM Approvals Ltd..

Issue date: 15th June 2017

THIS CERTIFICATE MAY ONLY BE REPRODUCED IN ITS ENTIRETY AND WITHOUT CHANGE

FM Approvals Ltd. 1 Windsor Dials, Windsor, Berkshire, UK. SL4 1RS
T: +44 (0) 1753 750 000 F: +44 (0) 1753 868 700 E-mail: atex@fmapprovals.com www.fmapprovals.com

D.1 ATEX EU-Type Examination Certificate (cont.)

SCHEDULE

to EU-Type Examination Certificate No. FM14ATEX0032X

13 **Description of Equipment or Protective System:**

The Model oxy.IQ is a two-wire, loop-powered transmitter for measuring oxygen in ten ppm ranges and seven percentage ranges. The Model oxy.IQ Transmitter contains one of five different oxygen cells. The cells are specified to be part numbers OX-1, OX-2, OX-3 and OX-4 and OX-5. The type of oxygen cell determines the range of measurement. The measured oxygen is converted to a mA signal for delivery to the control equipment located in the non-hazardous area.

The Model oxy.IQ Transmitter's electronics are contained on one printed circuit board. The circuit board is located inside of a metallic housing. An oxygen cell holder is connected to the circuit board by way of pins. The base of the oxygen cell holder contains a threaded joint for replacement of the oxygen cell. The housing contains a polymeric window display. The polymeric window is approximately 1" by ¾".The housing, including the sensor assembly, is approximately 4.1" in height, by 2.75" in width, and 2.05" in depth.

oxy.IQ-a3b-c0. Oxygen Transmitter.
a = Sensor: 0, 1, 2, 3, 4 or 5.
b = Cable Length: 0, 1 or 2.
c = Barrier: 0, 1 or 2.

Operation Temperature Ranges:
The ambient operating temperature range of the Model oxy.IQ Transmitter is -20°C to +60˚C.
The Transmitter is specified for use in normal atmospheric conditions.

Intrinsically Safe Energy Limitation Parameters:
Ui = 28V, Ii = 150mA, Pi = = 1.05W, Ci = 0, Li = 0.

14 **Specific Conditions of Use:**

The Model oxy.IQ Oxygen Transmitter will not pass the 500Vrms dielectric strength test. This must be taken into account during installation.

15 **Essential Health and Safety Requirements:**

The relevant EHSRs that have not been addressed by the standards listed in this certificate have been identified and assessed in the confidential report identified in item 8.

16 **Test and Assessment Procedure and Conditions:**

This EU-Type Examination Certificate is the result of testing of a sample of the product submitted, in accordance with the provisions of the relevant specific standard(s), and assessment of supporting documentation. It does not imply an assessment of the whole production.

Whilst this certificate may be used in support of a manufacturer's claim for CE Marking, FM Approvals Ltd accepts no responsibility for the compliance of the equipment against all applicable Directives in all applications.

This Certificate has been issued in accordance with FM Approvals Ltd's ATEX Certification Scheme.

17 **Schedule Drawings**

A list of the significant parts of the technical documentation is annexed to this certificate and a copy has been kept by the Notified Body.

THIS CERTIFICATE MAY ONLY BE REPRODUCED IN ITS ENTIRETY AND WITHOUT CHANGE

FM Approvals Ltd. 1 Windsor Dials, Windsor, Berkshire, UK. SL4 1RS
T: +44 (0) 1753 750 000 F: +44 (0) 1753 868 700 E-mail: atex@fmapprovals.com www.fmapprovals.com

D.1 ATEX EU-Type Examination Certificate (cont.)

SCHEDULE

to EU-Type Examination Certificate No. FM14ATEX0032X

18 **Certificate History**

Details of the supplements to this certificate are described below:

Date	Description
24th February 2015	Original Issue.
28th January 2016	Supplement 1: Report Reference: RR203799 dated 26th January 2016 Description of the Change: 1. Minor changes and documentation updates. 2. New Manufacturing Location.
15th June 2017	Supplement 2: Report Reference: – RR209822 Dated 13th June 2017. Description of the Change: 1. Updated certificate to new EU format. 2. Updated documentation list.

THIS CERTIFICATE MAY ONLY BE REPRODUCED IN ITS ENTIRETY AND WITHOUT CHANGE

FM Approvals Ltd. 1 Windsor Dials, Windsor, Berkshire, UK. SL4 1RS
T: +44 (0) 1753 750 000 F: +44 (0) 1753 868 700 E-mail: atex@fmapprovals.com www.fmapprovals.com

D.1 ATEX EU-Type Examination Certificate (cont.)

Blueprint Report

GE Infrastructure Sensing Inc (1000000179)

Class No 3610

Original Project I.D. 3047174

Certificate I.D. FM14ATEX0032X

Drawing No.	Revision Level	Drawing Title	Last Report	Electronic Drawing
714-1344	C	Oxy.IQ Safety Manual	RR209822	Yes (pdf)
752-341	C	MAIN PCB	RR209822	Yes (pdf)
752-347	B	Schematic Diagram - System Diagram oxy.IQ -FM Controlled Document	RR209822	Yes (pdf)

D.2 ATEX IECEx MAM Ex Certificate

Officine Meccaniche M.A.M. ATEX NOTIFIED IECEx NOTIFIED CE 0080
Apparecchiature antideflagranti
Via Vico Veneto 32
20090 Fizzonasco di P.Ve Emanuele Milano
Tel. ++39290400419
Fax ++39290400423
e-mail info@mamitaly.it
www.mamitaly.it

DICHIARAZIONE CE DI CONFORMITA'
CE DECLARATION OF CONFORMITY

Cliente: GE Sensing EMEA	**Ordine No.:** 538156 Order. no.
Commessa MAM: 1789 MAM Job	**Materiale:** GUB2W Material
Serial No.: 4586, 4587	

Con il presente certificato dichiariamo che il materiale fornito a fronte dell'ordine sopra citato è conforme alle seguenti direttive comunitarie e con la relativa legislazione nazionale di recepimento.:

We declare that the product supplied as per above mentioned order is in conformity with following comunitary directives and with the relevant national laws

- **ATEX DIRECTIVE 94/9/EC of March 23, 1994**

Dichiara inoltre che sono state applicate le seguenti norme armonizzate:
We also declare that following armonized standard have been applied

- **EN 60079-0 :2009 (IEC 60079-0 :2011)**
- **EN 60079-1 :2007 (IEC 60079-1 :2007)**
- **EN 60079-31:2009 (IEC 60079-31:2008)**
- **EN 60079-11:2007 (IEC 60079-11:2011)**

L'apparecchiatura è coperta dal seguente IECEx Certificate of Conformity
Apparatus are certified by following IECEx Certificate of Conformity

ISSeP 10ATEX011
IECEx INE 11.0018X

Ex d IIC T6 or T5 or T4 Gb
Ex tb IIIC T85°C or 100°C or 135°C Db IP66
Ex d [ia Ga] IIC T6 Gb
Ex tb [ia Da] IIIC T85°C Db IP66
Temp. Amb. -50°C/+60°C

Fizzonasco, July 18th 2014

OFFICINE MECCANICHE M.A.M.
F.Forciniti ATEX Authorized Person

D.2 ATEX IECEx MAM Ex Certificate (cont.)

MAM ANTIDEFLAGRANTI
Via Vico Veneto, 32
20090 Fizzonasco – Milano
Tel. 39290400419
Fax 39290400423
www.mamitaly.it
info@mamitaly.it

N.° comm : 1789 **Data: 17 July 2014**
MAM Job **Date:**

SERVIZIO CONTROLLO QUALITA'
QUALITY CONTROL SERVICE

Cliente: GE Sensing EMEA
Customer:

Ordine cliente: 538156 Data: 07 July 2014
Purchase Order: Date:

VERBALE VERIFICHE E PROVE INDIVIDUALI
ROUTINE CHECKS AND TESTS REPORT

In conformità a : According to:	Tipo di custodia Type of enclosure	Q.tà Q.ty	Tipo di verifica Type of check or test	Esito Pos.	Result Neg.	Note Notes
IEC/EN 60079-0 IEC/EN 60079-1 IEC/EN 60079-31 IEC/EN 60079-11	GUB2W	2	Verifica dimensionale Dimensional check	☑	☐	
			Prova di sovrapressione a 2000 KPa x 10 s Overpressure check at	☑	☐	
			Prova di funzionamento elettrico Electrical operation check	☑	☐	
			Prova di funzionamento meccanico Mechanical operation check	☑	☐	
			Verifica dispositivi di sicurezza Safety devices check	☑	☐	
			Serial Number.....4586....4587..			
			Lotto no.....06/14..... Batch no.			

Certificato di riferimento: IECEX-INE-11.0018X – ISSeP 10ATEX011
ref. Certificate

Classificazione: **Ex d IIC T6☑or T5☐ or T4☐ Gb**
Classification **Ex tb IIIC T85°C☑ or 100°C☐ or 135°C☐ Db IP65☑ or IP66☐**
Ex d [ia Ga] IIC T6 Gb
Ex tb [ia Da] IIIC T80°C Db IP65☐ or IP66☐
Temp. amb. -50°C/+60°C

Apparecchiatura Installata: GE OXY.IQ
Apparatus Installed

Caratteristiche Elettriche **Vmax: 24V** **Wmax: 15**

Incaricato cliente Customer's inspector	Incaricato MAM MAM inspector

D.3 Canadian Certificate of Compliance

CERTIFICATE OF CONFORMITY

FM Approvals
Member of the FM Global Group

1. **HAZARDOUS LOCATION ELECTRICAL EQUIPMENT PER CANADIAN REQUIREMENTS**
2. **Certificate No:** **FM17CA0101X**
3. **Equipment:** **Model oxy.IQ Oxygen Transmitter**
   (Type Reference and Name)
4. **Name of Listing Company:** **GE Infrastructure Sensing**
5. **Address of Listing Company:** **1100 Technology Park Drive**
   Billerica, MA 01821
   USA
6. The examination and test results are recorded in confidential report number:

   3047174 dated 3rd March 2015
7. FM Approvals LLC, certifies that the equipment described has been found to comply with the following Approval standards and other documents:

   CAN/CSA-E60079-0:2011, CAN/CSA -E60079-11:2014
   CAN/CSA-C22.2 No. 61010-1:2004
8. If the sign 'X' is placed after the certificate number, it indicates that the equipment is subject to specific conditions of use specified in the schedule to this certificate.
9. This certificate relates to the design, examination and testing of the products specified herein. The FM Approvals surveillance audit program has further determined that the manufacturing processes and quality control procedures in place are satisfactory to manufacture the product as examined, tested and Approved.
10. Equipment Ratings:

    Intrinsically Safe (Entity) for use in Class I, Division 1, Groups A, B, C and D; Temperature Class T4 Tamb = -20˚C to +60˚C in accordance with Control Drawing No. 752-347; Ex ia IIC T4 Tamb = -20˚C to +60˚C; in accordance with Control Drawing No. 752-347; Nonincendive for use in Class I, Division 2, Groups A, B, C and D; Temperature Class T4 Tamb = -20˚C to +60˚C Hazardous Locations.

Certificate issued by:

J. E. Marquedant
VP, Manager, Electrical Systems

13 June 2017
Date

To verify the availability of the Approved product, please refer to www.approvalguide.com

THIS CERTIFICATE MAY ONLY BE REPRODUCED IN ITS ENTIRETY AND WITHOUT CHANGE

FM Approvals LLC. 1151 Boston-Providence Turnpike, Norwood, MA 02062 USA
T: +1 (1) 781 762 4300 F: +1 (1) 781 762 9375 E-mail: information@fmapprovals.com www.fmapprovals.com

F 348 (Mar 16) Page 1 of 3

D.3 Canadian Certificate of Compliance (cont.)

SCHEDULE

Canadian Certificate Of Conformity No: FM17CA0101X

11. The marking of the equipment shall include:

    IS CL I DIV 1, GPS A, B, C, D;
    CL I, DIV 2, GPS ABCD
    Class I, Zone 0, Ex ia IIC T4 Ga
    Tamb = -20°C to +60°C
    Install per Control Drawing 752-347

12. **Description of Equipment:**

    The Model oxy.IQ is a two-wire, loop-powered transmitter for measuring oxygen in ten ppm ranges and seven percentage ranges. The Model oxy.IQ Transmitter contains one of five different oxygen cells. The cells are specified to be part numbers OX-1, OX-2, OX-3 and OX-4 and OX-5. The type of oxygen cell determines the range of measurement. The measured oxygen is converted to a mA signal for delivery to the control equipment located in the non-hazardous area.

    The Model oxy.IQ Transmitter's electronics are contained on one printed circuit board. The circuit board is located inside of a metallic housing. An oxygen cell holder is connected to the circuit board by way of pins. The base of the oxygen cell holder contains a threaded joint for replacement of the oxygen cell. The housing contains a polymeric window display. The polymeric window is approximately 1" by ¾".The housing, including the sensor assembly, is approximately 4.1" in height, by 2.75" in width, and 2.05" in depth.

    Operation Temperature Ranges:
    The ambient operating temperature range of the Model oxy.IQ Transmitter is -20°C to +60˚C.
    The Transmitter is specified for use in normal atmospheric conditions.

    Intrinsically Safe Energy Limitation Parameters:
    Ui = 28V, Ii = 150mA, Pi = = 1.05W, Ci = 0, Li = 0.

    Model oxy.IQ-a3b-c0. Oxygen Transmitter.
    a = Sensor: 0, 1, 2, 3, 4 or 5.
    b = Cable Length: 0, 1 or 2.
    c = Barrier: 0, 1 or 2.

13. **Specific Conditions of Use:**

    1. The Model oxy.IQ Oxygen Transmitter will not pass the 500Vrms dielectric strength test. This must be taken into account during installation.

    2. When installed in a Division 2 location, the Model oxy.IQ Oxygen Transmitter shall be installed in a final enclosure accepting a Division 2 wiring method per the CEC.

14. **Test and Assessment Procedure and Conditions:**

    This Certificate has been issued in accordance with FM Approvals Canadian Certification Scheme.

THIS CERTIFICATE MAY ONLY BE REPRODUCED IN ITS ENTIRETY AND WITHOUT CHANGE

FM Approvals LLC. 1151 Boston-Providence Turnpike, Norwood, MA 02062 USA
T: +1 (1) 781 762 4300 F: +1 (1) 781 762 9375 E-mail: information@fmapprovals.com www.fmapprovals.com

D.3 Canadian Certificate of Compliance (cont.)

SCHEDULE

Canadian Certificate Of Conformity No: FM17CA0101X

15. **Schedule Drawings**

A copy of the technical documentation has been kept by FM Approvals.

16. **Certificate History**

Details of the supplements to this certificate are described below:

Date	Description
23rd February 2015	Original Issue.
13th June 2017	Supplement 1: Report Reference: – RR209822 Dated 13th June 2017. Description of the Change: 1. Updated certificate to new format. 2. Addition of Class I, Division 2 markings

THIS CERTIFICATE MAY ONLY BE REPRODUCED IN ITS ENTIRETY AND WITHOUT CHANGE

FM Approvals LLC. 1151 Boston-Providence Turnpike, Norwood, MA 02062 USA
T: +1 (1) 781 762 4300 F: +1 (1) 781 762 9375 E-mail: information@fmapprovals.com www.fmapprovals.com

D.4 FM Certificate of Compliance

CERTIFICATE OF CONFORMITY

FM Approvals
Member of the FM Global Group

1. **HAZARDOUS (CLASSIFIED) LOCATION ELECTRICAL EQUIPMENT PER US REQUIREMENTS**
2. **Certificate No:** **FM17US0190X**
3. **Equipment:** **Model oxy.IQ Oxygen Transmitter**
   (Type Reference and Name)
4. **Name of Listing Company:** **GE Infrastructure Sensing**
5. **Address of Listing Company:** **1100 Technology Park Drive**
   Billerica, MA 01821
   USA
6. The examination and test results are recorded in confidential report number:

   3047174 dated 3rd March 2015

7. FM Approvals LLC, certifies that the equipment described has been found to comply with the following Approval standards and other documents:

   FM Class 3600:2011, FM Class 3610:2010, FM Class 3810:2005,
   ANSI/ISA 60079-0:2013, ANSI/UL 60079-11:2013, ANSI/ISA 61010-1:2004

8. If the sign 'X' is placed after the certificate number, it indicates that the equipment is subject to specific conditions of use specified in the schedule to this certificate.
9. This certificate relates to the design, examination and testing of the products specified herein. The FM Approvals surveillance audit program has further determined that the manufacturing processes and quality control procedures in place are satisfactory to manufacture the product as examined, tested and Approved.
10. Equipment Ratings:

    Intrinsically Safe (Entity) for use in Class I, Division 1, Groups A, B, C and D; Temperature Class T4 Tamb = -20˚C to +60˚C in accordance with Control Drawing No.752-347; Intrinsically safe (Entity) for use in Class I, Zone 0, AEx ia IIC T4 Tamb = -20˚C to +60˚C; in accordance with Control Drawing No. 752-347; Nonincendive for us in Class I, Division 2, Groups A, B, C and D; Temperature Class T4 Tamb = -20˚C to +60˚C; Hazardous (Classified) Location.

Certificate issued by:

J. E. Marquedant
VP, Manager, Electrical Systems

13 June 2017
Date

To verify the availability of the Approved product, please refer to www.approvalguide.com

THIS CERTIFICATE MAY ONLY BE REPRODUCED IN ITS ENTIRETY AND WITHOUT CHANGE

FM Approvals LLC. 1151 Boston-Providence Turnpike, Norwood, MA 02062 USA
T: +1 (1) 781 762 4300 F: +1 (1) 781 762 9375 E-mail: information@fmapprovals.com www.fmapprovals.com

F 347 (Mar 16) Page 1 of 3

D.4 FM Certificate of Compliance (cont.)

SCHEDULE

US Certificate Of Conformity No: FM17US0190X

11. The marking of the equipment shall include:

IS CL I DIV 1, GPS A, B, C, D;
CL I, DIV 2, GPS ABCD
Class I, Zone 0, AEx ia IIC T4 Ga
Tamb = -20°C to +60°C
Install per Control Drawing 752-347

12. **Description of Equipment:**

The Model oxy.IQ is a two-wire, loop-powered transmitter for measuring oxygen in ten ppm ranges and seven percentage ranges. The Model oxy.IQ Transmitter contains one of five different oxygen cells. The cells are specified to be part numbers OX-1, OX-2, OX-3 and OX-4 and OX-5. The type of oxygen cell determines the range of measurement. The measured oxygen is converted to a mA signal for delivery to the control equipment located in the non-hazardous area.

The Model oxy.IQ Transmitter's electronics are contained on one printed circuit board. The circuit board is located inside of a metallic housing. An oxygen cell holder is connected to the circuit board by way of pins. The base of the oxygen cell holder contains a threaded joint for replacement of the oxygen cell. The housing contains a polymeric window display. The polymeric window is approximately 1" by ¾".The housing, including the sensor assembly, is approximately 4.1" in height, by 2.75" in width, and 2.05" in depth.

Operation Temperature Ranges:
The ambient operating temperature range of the Model oxy.IQ Transmitter is -20°C to +60˚C.
The Transmitter is specified for use in normal atmospheric conditions.

Intrinsically Safe Energy Limitation Parameters:
Ui = 28V, Ii = 150mA, Pi = = 1.05W, Ci = 0, Li = 0.

Model oxy.IQ-a3b-c0. Oxygen Transmitter.
a = Sensor: 0, 1, 2, 3, 4 or 5.
b = Cable Length: 0, 1 or 2.
c = Barrier: 0, 1 or 2.

13. **Specific Conditions of Use:**

1. The Model oxy.IQ Oxygen Transmitter will not pass the 500Vrms dielectric strength test. This must be taken into account during installation.

2. When installed in a Division 2 location, the Model oxy.IQ Oxygen Transmitter shall be installed in a final enclosure accepting a Division 2 wiring method per the NEC.

14. **Test and Assessment Procedure and Conditions:**

This Certificate has been issued in accordance with FM Approvals US Certification Requirements.

THIS CERTIFICATE MAY ONLY BE REPRODUCED IN ITS ENTIRETY AND WITHOUT CHANGE

FM Approvals LLC. 1151 Boston-Providence Turnpike, Norwood, MA 02062 USA
T: +1 (1) 781 762 4300 F: +1 (1) 781 762 9375 E-mail: information@fmapprovals.com www.fmapprovals.com

D.4 FM Certificate of Compliance (cont.)

SCHEDULE

US Certificate Of Conformity No: FM17US0190X

15. **Schedule Drawings**

A copy of the technical documentation has been kept by FM Approvals.

16. **Certificate History**

Details of the supplements to this certificate are described below:

Date	Description
23rd February 2015	Original Issue.
13th June 2017	Supplement 1: Report Reference: – RR209822 Dated 13th June 2017. Description of the Change: 1. Updated certificate to new format. 2. Addition of Class I, Division 2 markings

THIS CERTIFICATE MAY ONLY BE REPRODUCED IN ITS ENTIRETY AND WITHOUT CHANGE

FM Approvals LLC. 1151 Boston-Providence Turnpike, Norwood, MA 02062 USA
T: +1 (1) 781 762 4300 F: +1 (1) 781 762 9375 E-mail: information@fmapprovals.com www.fmapprovals.com

D.5 IECEx Certificate of Conformity

IECEx Certificate of Conformity

INTERNATIONAL ELECTROTECHNICAL COMMISSION
IEC Certification Scheme for Explosive Atmospheres
for rules and details of the IECEx Scheme visit www.iecex.com

Certificate No.: IECEx FMG 14.0016X
Issue No: 2
Certificate history:
Issue No. 2 (2017-06-13)
Issue No. 1 (2016-01-26)
Issue No. 0 (2015-02-13)

Status: **Current**
Page 1 of 4

Date of Issue: **2017-06-13**

Applicant: **GE Infrastructure Sensing**
1100 Technology Park Drive
Billerica, MA 01821
United States of America

Equipment: **Model oxy.IQ Oxygen Transmitter**
Optional accessory:

Type of Protection: **Intrinsic Safety**

Marking:
Ex ia IIC T4 Ga; -20°C ≤ Ta ≤ +60°C

Energy Limitation Parameters:

Ui <= 28V, Ii <= 150mA, Pi = <= 1.05W, Ci = 0, Li = 0.

Approved for issue on behalf of the IECEx Certification Body: James Marquedant

Position: VP, Manager - Electrical Systems

Signature:
(for printed version)

Date:

1. This certificate and schedule may only be reproduced in full.
2. This certificate is not transferable and remains the property of the issuing body.
3. The Status and authenticity of this certificate may be verified by visiting the Official IECEx Website.

Certificate issued by:
FM Approvals LLC
1151 Boston-Providence Turnpike
Norwood, MA 02062
United States of America

FM Approvals
Member of the FM Global Group

D.5 IECEx Certificate of Conformity (cont.)



IECEx Certificate of Conformity

Certificate No: IECEx FMG 14.0016X Issue No: 2

Date of Issue: **2017-06-13** Page 2 of 4

Manufacturer: **GE Sensing EMEA**
FREE ZONE EAST, SHANNON
CO. CLARE, V14 V992
Ireland

Additional Manufacturing location(s):

This certificate is issued as verification that a sample(s), representative of production, was assessed and tested and found to comply with the IEC Standard list below and that the manufacturer's quality system, relating to the Ex products covered by this certificate, was assessed and found to comply with the IECEx Quality system requirements. This certificate is granted subject to the conditions as set out in IECEx Scheme Rules, IECEx 02 and Operational Documents as amended.

STANDARDS:
The electrical apparatus and any acceptable variations to it specified in the schedule of this certificate and the identified documents, was found to comply with the following standards:

IEC 60079-0 : 2011 Explosive atmospheres - Part 0: General requirements
Edition:6.0
IEC 60079-11 : 2011 Explosive atmospheres - Part 11: Equipment protection by intrinsic safety "i"
Edition:6.0

*This Certificate **does not** indicate compliance with electrical safety and performance requirements other than those expressly included in the Standards listed above.*

TEST & ASSESSMENT REPORTS:
A sample(s) of the equipment listed has successfully met the examination and test requirements as recorded in

Test Report:
US/FMG/ExTR14.0016/00 US/FMG/ExTR14.0016/01 US/FMG/ExTR14.0016/02

Quality Assessment Report:
GB/BAS/QAR10.0026/03

D.5 IECEx Certificate of Conformity (cont.)

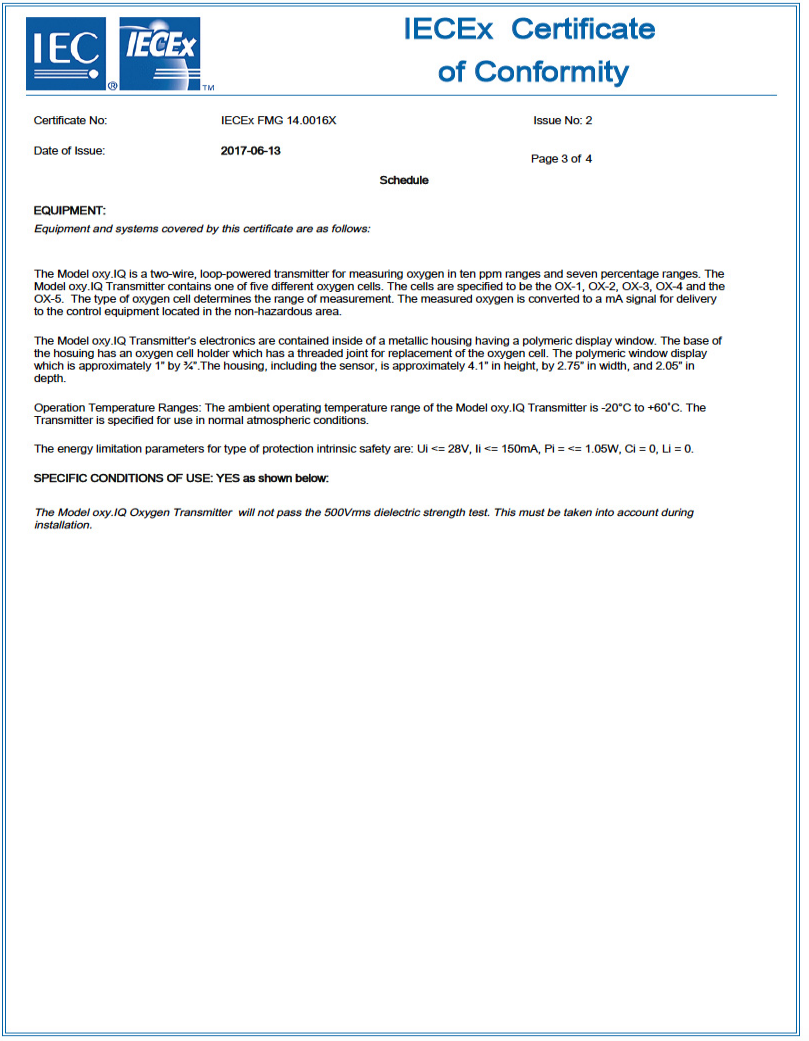

IECEx Certificate of Conformity

Certificate No: IECEx FMG 14.0016X Issue No: 2

Date of Issue: **2017-06-13** Page 3 of 4

Schedule

EQUIPMENT:

Equipment and systems covered by this certificate are as follows:

The Model oxy.IQ is a two-wire, loop-powered transmitter for measuring oxygen in ten ppm ranges and seven percentage ranges. The Model oxy.IQ Transmitter contains one of five different oxygen cells. The cells are specified to be the OX-1, OX-2, OX-3, OX-4 and the OX-5. The type of oxygen cell determines the range of measurement. The measured oxygen is converted to a mA signal for delivery to the control equipment located in the non-hazardous area.

The Model oxy.IQ Transmitter's electronics are contained inside of a metallic housing having a polymeric display window. The base of the housing has an oxygen cell holder which has a threaded joint for replacement of the oxygen cell. The polymeric window display which is approximately 1" by ¾".The housing, including the sensor, is approximately 4.1" in height, by 2.75" in width, and 2.05" in depth.

Operation Temperature Ranges: The ambient operating temperature range of the Model oxy.IQ Transmitter is -20°C to +60°C. The Transmitter is specified for use in normal atmospheric conditions.

The energy limitation parameters for type of protection intrinsic safety are: Ui <= 28V, Ii <= 150mA, Pi = <= 1.05W, Ci = 0, Li = 0.

SPECIFIC CONDITIONS OF USE: YES as shown below:

The Model oxy.IQ Oxygen Transmitter will not pass the 500Vrms dielectric strength test. This must be taken into account during installation.

D.5 IECEx Certificate of Conformity (cont.)

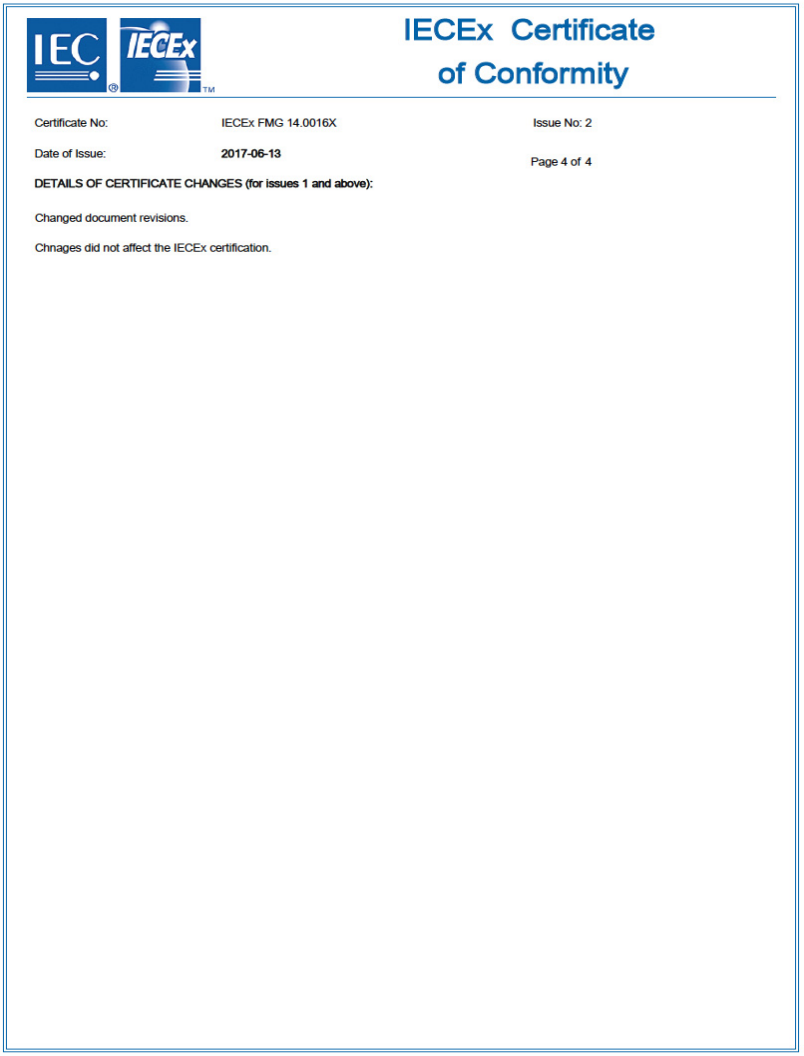

IECEx Certificate of Conformity

Certificate No: IECEx FMG 14.0016X Issue No: 2

Date of Issue: 2017-06-13 Page 4 of 4

DETAILS OF CERTIFICATE CHANGES (for issues 1 and above):

Changed document revisions.

Chnages did not affect the IECEx certification.

A

Adjusting, oxy.IQ 14
Air Calibration 17
Analog Output
see Output
Applications 2

B

Buttons, Keypad. 13

C

Cable
Connector 8
Installed. 8
Longer 9
Calculating Analog Output 19
Calibration
Air 17
Existing Oxygen Sensor 18
Menu 21
New Oxygen Sensor 18
oxy.IQ. 14
Span Gas 19
Certifications 51
Contrast, Adjusting Display. 24

D

Diagnostics Menu 30
Dimensions 33
Display
Contrast, Adjusting. 24
Location 13
Menu 21, 23
O2 Parameter, Selecting 23
Range, Setting. 24
Document Number i
Drawings, Outline & Installation. 37

E

Error
- Output Value 27
- Type, Selecting 25

F

Features 3

I

Initial Setup 13
Installation
- Cable 8
- Drawings 37
- Mounting the oxy.IQ 5
- Oxygen Sensor 10
- Sensor Manifold 6
- Wiring 8

Interference Gases 4
Intrinsically Safe 2

K

Keypad, Buttons 13

L

Label, Product 35

M

Main Menu
- Entering 14
- Map 46

Menu
- Calibration 21
- Display 21, 23
- Output 15, 21, 25
- Service 14
- Trim 16
- User 14, 21

Menu Maps 45
- Main Menu, Service 47
- Main Menu, User's 46

Mounting the Oxy.IQ 5

O

O2 Display Parameter, Selecting 23
Order String 49
O-Ring, Sensor Manifold 11
Outline & Installation Drawings 5, 37
Output
    Calculation 19
    Error Condition 25
    Error Value 27
    High (20 mA), Trimming 17
    Low (4 mA), Trimming 16
    Menu 15, 25
    Range, Selecting 15
    Trimming 16
oxy.IQ
    Adjusting 14
    Calibrating 14
    Calibration, Air 17
    Calibration, Span Gas 19
    Installing 5
    Output Range, Selecting 15
Oxygen Sensor
    Calibration, Existing 18
    Calibration, New 18
    Installation 10
    Sensor Life 22
    Unpacking 6

P

Passcode, Service Menu 29
Pressure Rating 7
Programming, User 21
Publication Date i

R

Range
    Selecting 15
    Setting Display 24
Registration iii
Regulatory Compliance vi

RoHS Compliance vi

S

Safety
- Auxiliary Equipment iv
- General Issues iv
- Personal Equipment v

Sample System 4, 7
Sensor Manifold
- Mounting 6
- O-Ring 11

Service Menu
- Diagnostics Option 30
- Entering 29
- Menu Map 47
- Passcode 29

Services iii
Span Gas Calibration 19
Specifications 31
Support
- Customer Support Centers 2

T

Terms and Conditions iii
Trimming
- Analog Output 16
- Output, High (20 mA) 17
- Output, Low (4 mA) 16

Typographical Conventions iii

W

Warranty iii
WEEE Compliance vi
Weight 33
Wiring the oxy.IQ 8

Addendum A. oxy.IQ Safety Manual

oxy.IQ	GE Sensing 1100 Technology Park Drive Billerica, MA 01821			Oxy.IQ Safety Manual
MODEL	DWG NO.	714-1344	REV. C	TITLE

Certification & Safety Statements for the oxy.IQ oxygen Transmitter

The oxy.IQ is a highly reliable and cost-effective two-wire, loop-powered transmitter with a linearized 4 to 20 mA output. It measures oxygen in ten ppm ranges and seven percentage ranges. All ranges are user-selectable. This compact transmitter uses proven sensor technology to accurately measure O_2 in a variety of gases, even in hazardous environments.

When installing this apparatus, the following requirements must be met:

- The system is covered by the certificate numbers FM14ATEX0032X and IECEx FMG 14.00016X as shown on the labels on the following page. The system temperature code is T4 in the temperature range of -20 to 60°C.
- The apparatus should be de-energized before servicing.
- Installation shall be in accordance with the installation instructions and the National Electrical Code® ANSI/NFPA 70, the Canadian Electrical Code C22.1, or IEC/EN 60079-14, as applicable.
- Equipment is of type Intrinsically Safe and complies with: EN 60079-0:2012, EN 60079-11:2012, IEC 60079-0:2007, IEC 60079-11:2006, IEC 60529:1992, C22.2 No.1010.1:2004, CAN/ CSA-E60079-0:2011, CAN/CSA-E60079-11:2011, C22.2.60529:2005, FM Class 3600:2011, FM Class 3610:2010, FM Class 3810:2005, ANSI/ ISA 61010-1:2004 Ed.2, ANSI/ ISA 60079-0:2009 Ed.5, ANSI/ ISA 60079-11:2009 Ed.5.
- The product contains no exposed parts which produce surface temperature infrared, electromagnetic ionizing, or non-electrical dangers.
- The product must not be subjected to mechanical or thermal stresses in excess of those permitted in the certification documentation and the instruction manual.
- The product cannot be repaired by the user; it must be replaced by an equivalent certified product. Repairs should only be carried out by the manufacturer or by an approved repairer. Please contact GE Customer Support Center for repair, maintenance or replacement of the product. For oxygen sensor replacements please contact GE Customer Support Center.

U.S.A
The Boston Center
1100 Technology Park Drive
Billerica, MA 01821
U.S.A
Tel: 800 833 9438 (toll-free), 978 437 1000
E-mail:sensing@ge.com

Ireland
GE Sensing EMEA
Free Zone East, Shannon,
Co. Clare, V14 V992, Ireland
Tel: +35 361 470200

oxy.IQ	GE Sensing 1100 Technology Park Drive Billerica, MA 01821			Oxy.IQ Safety Manual
MODEL	DWG NO.	714-1344	REV. C	TITLE

- Only trained, competent personnel may install, operate and maintain the equipment.
- For product training please contact GE Customer Support Center:

U.S.A
The Boston Center
1100 Technology Park Drive
Billerica, MA 01821
U.S.A
Tel: 800 833 9438 (toll-free), 978 437 1000
E-mail:sensing@ge.com

Ireland
GE Sensing EMEA
Free Zone East, Shannon,
Co. Clare, V14 V992, Ireland
Tel: +35 361 470200

- The product is an electrical apparatus and must be installed in the hazardous area in accordance with the requirements of the EC Type Examination Certificate. The installation must be carried out in accordance with all the appropriate international, national and local standard codes and practices and site regulations for Intrinsically Safe apparatus and in accordance with the instructions contained in the manual. Access to the circuitry must not be made during operation.
- The maximum operating pressure for the oxy.IQ is 10psi. Be sure the sample conditioning system is designed to maintain the oxy.IQ pressure below these limits, and that the oxy.IQ outlet is vented to atmosphere during operation and calibration.
- **WARNING** - Substitution of components may impair Intrinsic Safety.
- **WARNING** - To prevent ignition of flammable or combustible atmospheres, disconnect power before servicing.
- **AVERTISSEMENT** - Pour éviter l'inflammation d'atmosphères inflammables ou combustibles, débrancher l'alimentation avant l'entretien.
- **AVERTISSEMENT** - Remplacement des composants peut compromettre la sécurité intrinsèque.
- Equipment is not intended for the measurement of oxygen in fluid of liquid phase.

Special Conditions of Safe Use

1. The Model oxy.IQ will not pass the 500V dielectric test. This must be taken into account upon installation.
2. When installed in a Division 2 location, the Model oxy.IQ oxygen transmitter shall be installed in a final enclosure accepting a Division 2 wiring method per NEC/CEC.

oxy.IQ	GE Sensing 1100 Technology Park Drive Billerica, MA 01821			Oxy.IQ Safety Manual
MODEL	DWG NO.	714-1344	REV. C	TITLE

Markings

Markings shall appear on the oxy.IQ as shown below for the Intrinsically Safe version of the product.

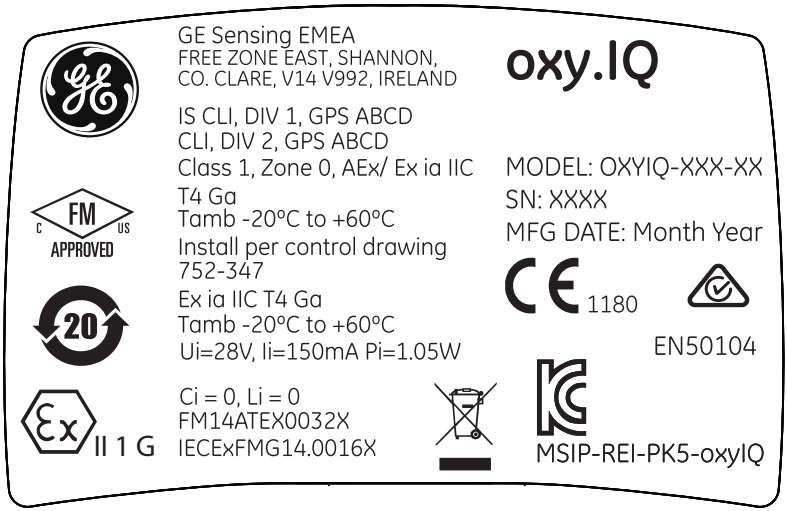

oxy.IQ	GE Sensing 1100 Technology Park Drive Billerica, MA 01821			Oxy.IQ Safety Manual
MODEL	DWG NO.	714-1344	REV. C	TITLE

Connection and Wiring Diagram

The following diagram is the entity parameters for the oxy.IQ.

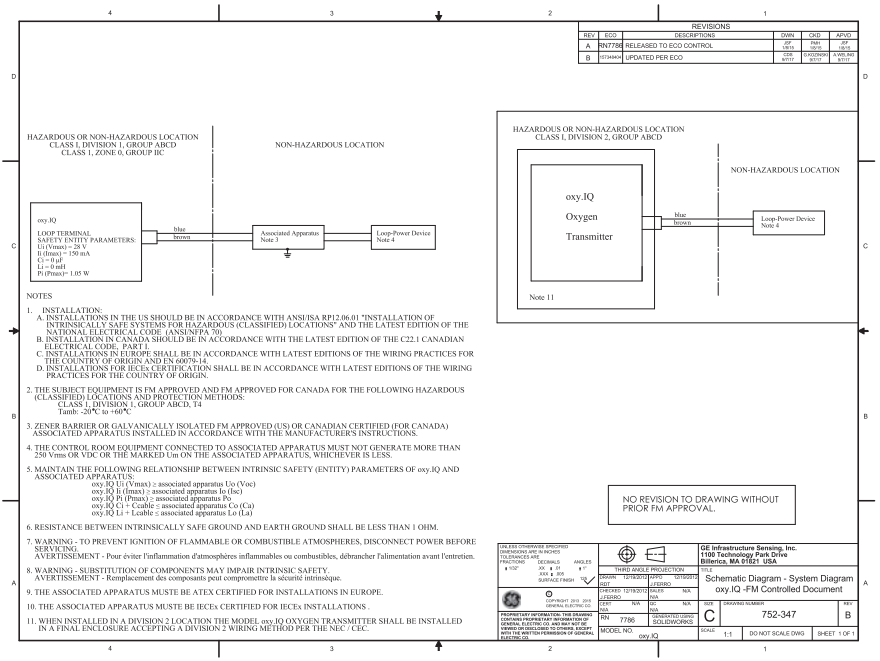

oxy.IQ	GE Sensing 1100 Technology Park Drive Billerica, MA 01821			Oxy.IQ Safety Manual
MODEL	DWG NO.	714-1344	REV. C	TITLE

Power Requirements:
Nominal Operating Parameters: 28VDC at 50mA

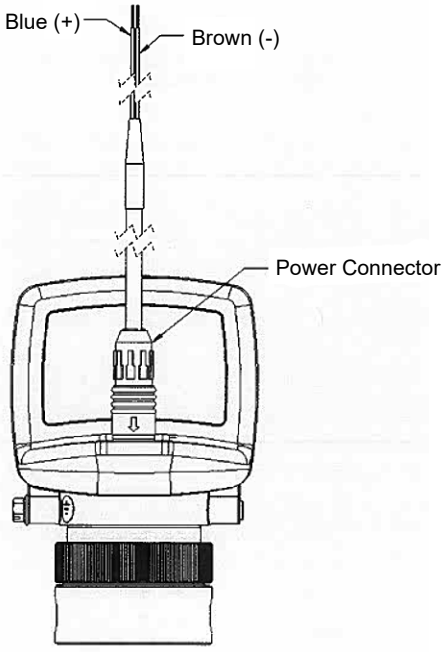

[no content intended for this page]

GE
Sensing

EU DECLARATION OF CONFORMITY

DOC-0046, Rev. C

We,

GE Sensing
1100 Technology Park Drive
Billerica, MA 01821
USA

declare under our sole responsibility that the

oxy.IQ™ Oxygen Transmitter

to which this declaration relates, is in conformity with the following standards:

- EN 60079-0:2012+A11:2013
- EN 60079-11:2012, II 1 G – Ex ia IIC T4 Ga
  QAN license 0795 : SGS Baseefa Ltd, Buxton SK17 9RZ, UK - NoBo# 1180
- EN 61326-1: 2013, Group 1, Class A, Industrial EM Environments
- EN 61326-2-3: 2013

following the provisions of directives 2014/30/EU (EMC) and 2014/34/EU (ATEX).

EU Type Examination Certificate:

- FM14ATEX0032X
  FM Approvals Ltd, Windsor SL4 1RS, UK - NoBo# 1725

The product listed above, and any ancillary equipment supplied with it, does not bear the CE mark for directive 2014/68/EU (Pressure Equipment) as it falls under Article 4, section 3 (sound engineering practice) for DN <25.

Directive 2014/35/EU is not applicable due to the 28 V d.c. maximum operation voltage.

Billerica - October 25, 2016

Mr. Chris Frail
Engineering Manager

[no content intended for this page]

Customer Support Centers

U.S.A.

The Boston Center
1100 Technology Park Drive
Billerica, MA 01821
U.S.A.
Tel: 800 833 9438 (toll-free)
978 437 1000
E-mail: mstechsupport@bhge.com

Ireland

Sensing House
Shannon Free Zone East
Shannon, County Clare
Ireland
Tel: +35 361 470200
E-mail: mstechsupport@bhge.com

bhge.com

© 2017 Baker Hughes, a GE company – All rights reserved.

Baker Hughes reserves the right to make changes in specifications and features shown herein, or discontinue the product described at any time without notice or obligation. Contact your BHGE representative for the most current information. The Baker Hughes logo is a trade mark of Baker Hughes, a GE company. The GE Monogram is a trademark of the General Electric Company.

910-296 Rev. E