BAKER HUGHES
a GE company

oxy.IQ
Panametrics
Oxygen Transmitter



Applications

An oxygen transmitter for use in:

- Glove box purge and leak detection
- Natural gas
- Semiconductor wafer machines
- Coating process machines
- Membrane air separators
- Inert welding gases
- Pure gaseous hydrocarbon streams
- Process monitoring of gaseous monomers
- Heat treating and bright annealing

Features

- Two-wire, loop-powered 4 to 20 mA transmitter
- Display with keypad
- Intrinsically safe option for Class 1 Div 1 and Div 2 locations
- Ex flameproof option
- Proven galvanic fuel cell O_2 sensor technology
- User selectable ranges for ppm and percent oxygen
- User-friendly and intuitive user interface with diagnostics
- Microprocessor-based, all-digital technology for reliable operation
- Low maintenance, economical and compact
- Sensor failure output error
- Sensor lifetime indication
- NAMUR error indication

Panametrics Oxygen Transmitter

The oxy.IQ is a highly reliable and cost-effective two-wire, loop-powered transmitter with a linearized 4 to 20 mA output. It measures oxygen in ten ppm ranges and seven percentage ranges. All ranges are user-selectable. This compact transmitter uses proven sensor technology to accurately measure O_2 in a variety of gases, even in hazardous environments.

Proven Sensor Technology

The oxy.IQ's oxygen sensor is an advanced galvanic fuel cell that provides superior performance, accuracy, stability and long life. The cell's innovative design eliminates the potential for negative signal output, reduces sources of contamination.

The cell is unaffected by other background gases or hydrocarbons and is compatible with acid gases (OX-2 and OX-4 cells). Recovery from air at low ppm levels takes just a few minutes. Because the cell is self-contained, minimal maintenance is required. There is no electrolyte to change or electrodes to clean.

Intrinsically Safe

When equipped with optional zener barriers or a galvanic isolator, the oxy.IQ can be mounted in a hazardous (classified) location.



Advanced Galvanic Fuel Cell Sensor

Control at the Tip of a Finger

The rugged oxy.IQ is controlled by a microprocessor that enables the user to select the range, trim outputs and perform calibration. Improved user interface includes user-selectable and programmable ranges, sensor diagnostics including a sensor lifetime feature and sensor raw signal, low reading/sensor failure signal and temperature compensation. Programming is easily done using the keypad and display. These keypad buttons allow complete functionality in hazardous areas when equipped with a zener barrier or a galvanic isolator per drawing 752-347.

Installation Flexibility

The compact oxy.IQ, with its built-in microprocessor, is designed to fit easily into any installation site. The oxy.IQ can be installed right at the sampling point, whereas other transmitters must be rack or panel mounted.

Sample Systems

In addition to standard features and options, GE offers a full line of sample handling systems for a variety of applications. If needed, GE can design and build a sample conditioning system to meet unique application requirements. Please contact GE for details.

Oxygen Sensor Interference Gases

Gas	OX-1 and OX-5, ppm Cont.	OX-2, ppm Cont.	OX-3, %		OX-4%	
			Cont.	Int. (1)	Cont.	Int.
H_2S	<5 ppm	<10 ppm	0.0005%	0.01%	0.001%	0.1%
SO_3	<10 ppm	<10 ppm	0.01%	0.1%	0.01%	0.1%
SO_2	<10 ppm	(3)	0.01%	0.1%	(3)	(3)
HCl	<1000 ppm	(3)	0.1%	1.0%	(3)	(3)
HCN	<1000 ppm	(3)	0.1%	1.0%	(3)	(3)
CO_2	<1000 ppm	(3)	0.1%	20%	(3)	(3)
NO_2	(2)	(2)	(2)	(2)	(2)	(2)
CL_2	(2)	(2)	(2)	(2)	(2)	(2)

Cont. = Continuous, Int. = Intermittent

(1) Recommended maximum exposure 30 minutes followed by flushing with ambient air for equal period

(2) Minimal effect on sensor performance, but produces signal interference of 1:2 ratio, ppm levels only. For example, 100 ppm NO_2 looks like 200 ppm O_2

(3) Minimal effect on sensor performance

oxy.IQ Specifications

Intrinsically Safe (IS) Installation

Intrinsically safe installations require a zener barrier, one IS cable and one non-IS cable.

Power Requirements

24 to 28 VDC at 50 mA

Cable

- *PN 704-1318:* blue jacket, twisted pair with connector; 26 AWG; 2 or 10 m length

Output

Total load must equal 250 Ω ±5% when using zener barrier

General Purpose and Non-Incendive (Div 2) Installations

Standard option package or IS package, no Zener barrier or galvanic isolator is required.

Power Requirements

9 to 28 VDC loop powered, 0.7 W maximum

Cable

- *PN 704-1317:* black jacket, twisted pair with connector; 26 AWG; 2 or 10 m length

All Installations

Process Wetted Materials

- SS process unit: 316 stainless steel, Viton® O-ring, gold plated sensor electrical contacts and glass

User-Selectable Measurement Ranges

- PPM sensors:
  - 0 to 10 ppm_v O_2 (OX-1 or OX-2 only)
  - 0 to 20 ppm_v O_2 (OX-1 or OX-2 only)
  - 0 to 50 ppm_v O_2 (OX-1 or OX-2 only)
  - 0 to 100 ppm_v O_2
  - 0 to 200 ppm_v O_2
  - 0 to 500 ppm_v O_2
  - 0 to 1000 ppm_v O_2
  - 0 to 2000 ppm_v O_2
  - 0 to 5000 ppm_v O_2
  - 0 to 10,000 ppm_v O_2
- Percent sensors:
  - 0% to 1% O_2
  - 0% to 2% O_2
  - 0% to 5% O_2
  - 0% to 10% O_2
  - 0% to 25% O_2
  - 0% to 50% O_2

oxy.IQ Specifications

All Installations

Accuracy
- ±1% of range at calibration point
- ±2% of range at the calibration point for the 0 to 10 ppmv range (OX-1 or OX-2 only)

Repeatability
- ±1% of range
- ±2% of Range for the 0 to 10 ppmv range (OX-1, 2 only)

Resolution
±0.1% of range

Linearity
±2% of range (OX-1, 2, 3, 5)
±5% of range (OX-4)

O_2 Sensor Operating Temperature
32 to 113°F (0 to 45°C)

Sample Pressure
Vented to atmosphere during operation and calibration

Atmospheric Pressure Effect
±0.13% of reading per mmHg (directly proportional to absolute pressure). During calibration, pressure and flow must be kept constant.

Process Connection
- 1/8 in. NPT inlet and outlet

Dimensions
4.10 x 2.75 x 2.05 in. (104.1 x 69.9 x 52.1 mm)

Weight
1.35 lb (612 grams)

Sample Flow Rate
1.0 SCFH (500 cc/min) recommended for process units

Electrical Classification/Certification
Intrinsically Safe
USA/Canada
IS for Class I, Div 1, Groups ABCD, T4
AEx ia IIC T4
ATEX and IECEx
Ex ia IIC Ga T4 Tamb -20 to 60°C
IS package, non-incendive without use of Zener barrier or galvanic isolator:
- USA/Canada: Class 1, Div 2, Groups A, B, C, D; T4
- ATEX/IECEx: Ex na IIC T4

European Compliance
Complies with EMC Directive 2004/108/EC

Dimensions

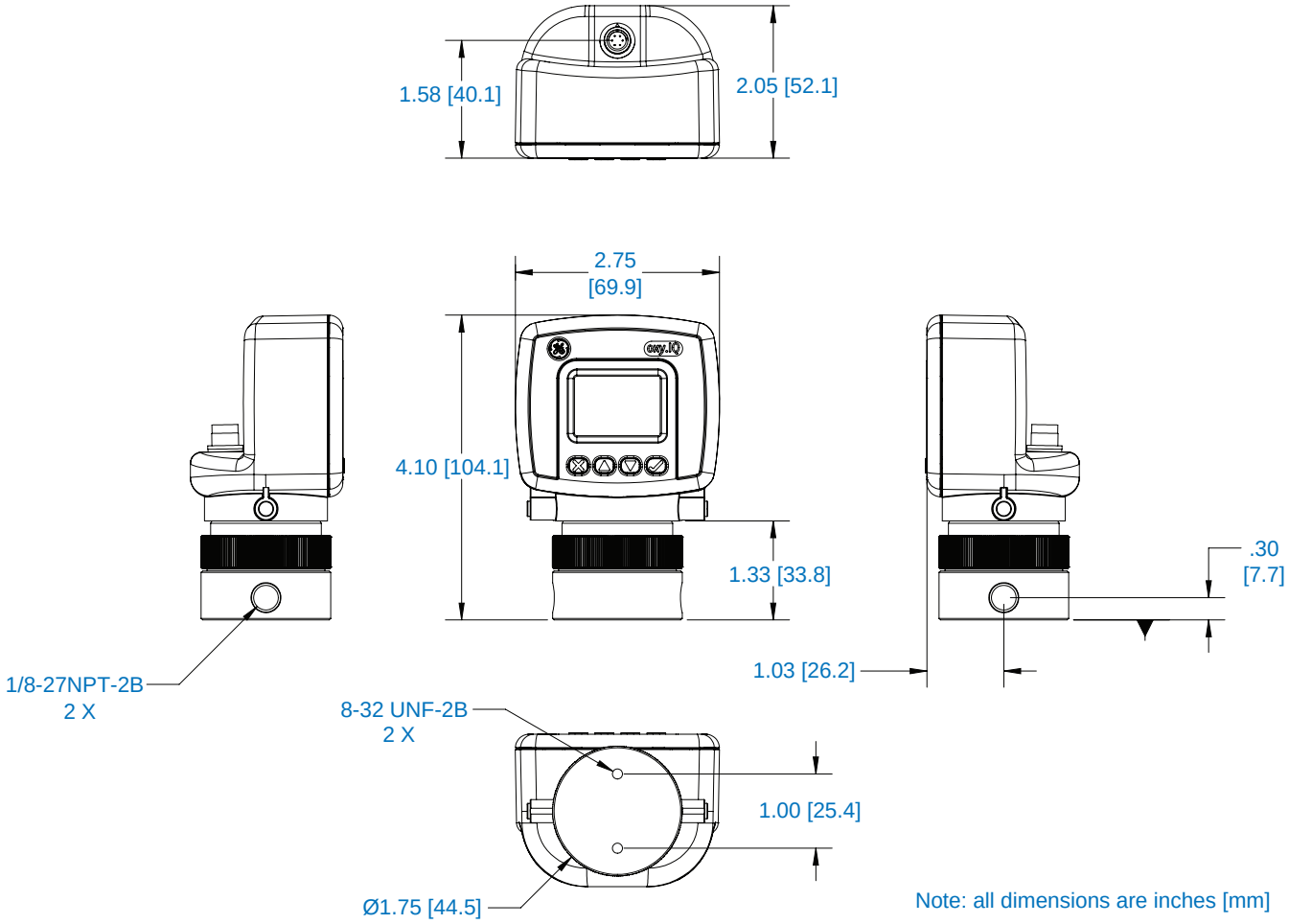

Note: all dimensions are inches [mm]

Installation Options

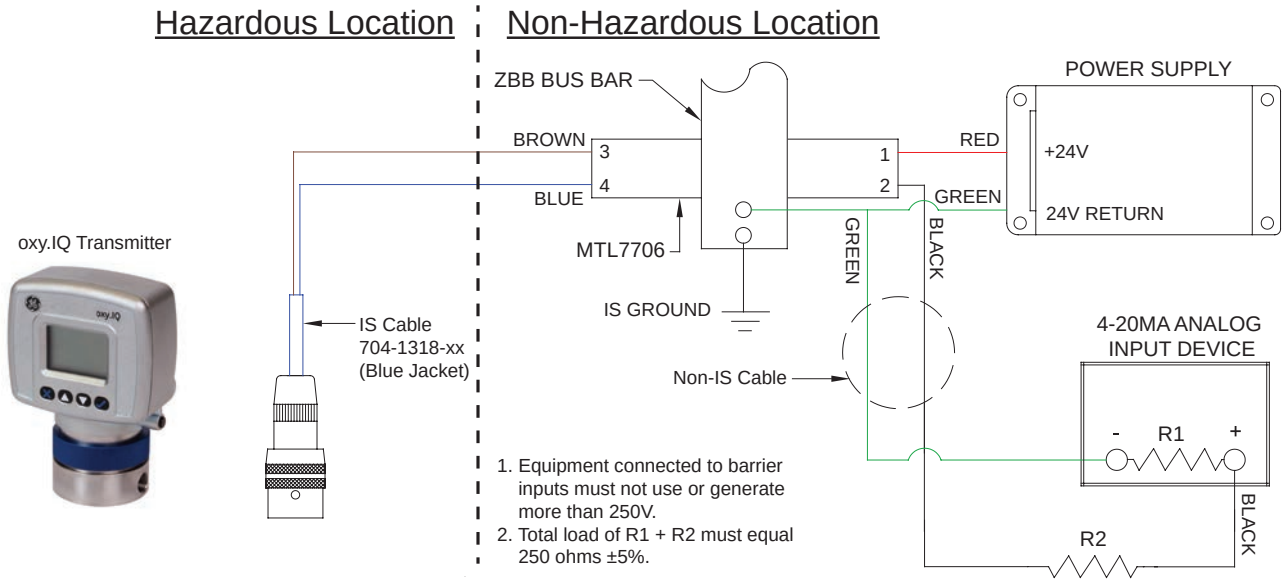

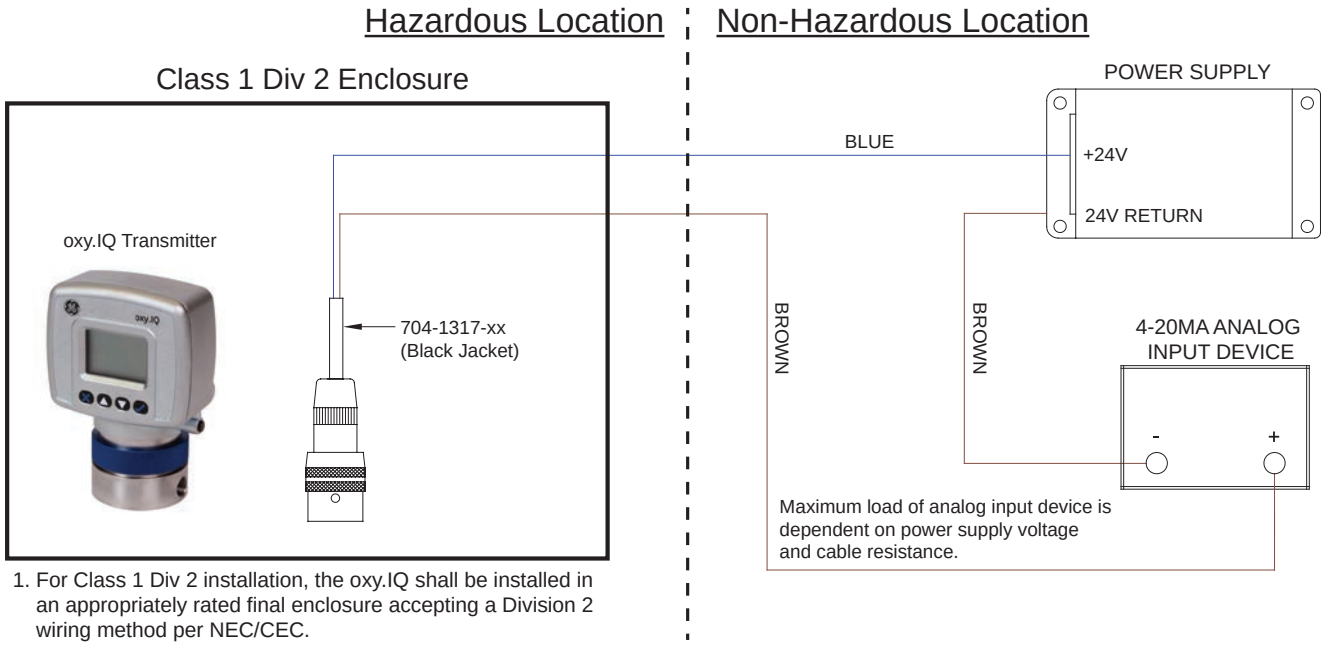

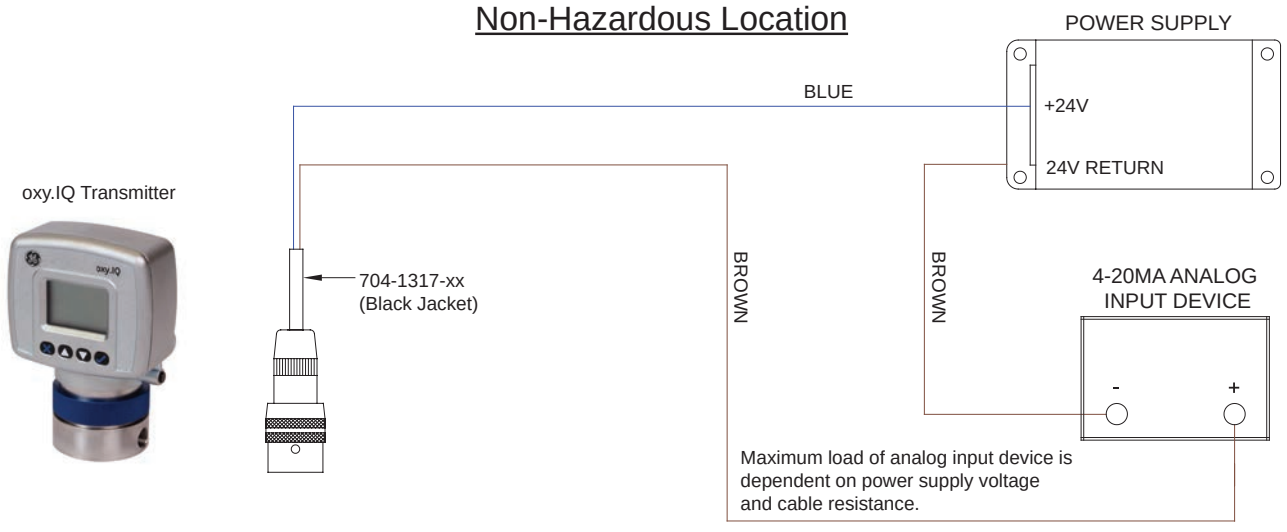

Ordering Information

Record selected option in blank spaces indicated at bottom of form.

OXY.IQ-BCD-E Option Code

A - Model Only

oxy.IQ Oxygen Transmitter; 4 to 20 mA output

B - Sensor

0 No sensor
1 Standard ppm, 0 to 10, 20, 50, 100, 200, 500, 1000 ppm
2 Acid ppm, 0 to 10, 20, 50, 100, 200, 500, 1000 ppm
3 Standard percent sensor
4 Acid percent sensor
5 Standard ppm, 0 to 100, 200, 500 and 1000 ppm

C - Package

1 Standard
3 Intrinsically safe (US/CAN Class 1 Div 1) or Non-incendive (US/CAN Class 1 Div 2)
4 Ex flameproof

D - Cable Length

0 No cable
1 2 meter cable
2 10 meter cable

E - Zener Barrier

0 None
1 Zener barrier
2 Galvanic isolator

Note: For Class 1 Div 1, either zener barrier or galvanic isolator must be selected. For Class 1 Div 2, no barriers needed. Please refer to dwg 752-347 for installation guidelines.

__ - __ ___ ___ ___ [Use this number to order product]



bhge.com

© 2017 Baker Hughes, a GE company – All rights reserved.

Baker Hughes reserves the right to make changes in specifications and features shown herein, or discontinue the product described at any time without notice or obligation. Contact your BHGE representative for the most current information. The Baker Hughes logo is a trade mark of Baker Hughes, a GE company. The GE Monogram is a trademark of the General Electric Company.

920-603D