MICHELL Instruments

Easidew
Dew-Point Transmitter
User's Manual



97504 Issue 3.1
May 2019

Please fill out the form(s) below for each instrument that has been purchased.

Use this information when contacting Michell Instruments for service purposes.

Transmitter	
Code	
Serial Number	
Invoice Date	
Location of Instrument	
Tag No	

Transmitter	
Code	
Serial Number	
Invoice Date	
Location of Instrument	
Tag No	

Transmitter	
Code	
Serial Number	
Invoice Date	
Location of Instrument	
Tag No	



Easidew

For Michell Instruments' contact information please go to
www.michell.com

© 2019 Michell Instruments
This document is the property of Michell Instruments Ltd. and may not be copied or otherwise reproduced, communicated in any way to third parties, nor stored in any Data Processing System without the express written authorization of Michell Instruments Ltd.

Contents

Safety v
Electrical Safety v
Pressure Safety v
Toxic Materials v
Repair and Maintenance v
Calibration v
Safety Conformity v
Abbreviations vi
Warnings vi

1 INTRODUCTION 1

2 INSTALLATION 2
2.1 Unpacking the Instrument 2
2.2 Preparation of the Sensor Cable 3
2.3 Cable Connection 4
2.4 Electrical Schematic 5
2.4.1 Electrical Boundaries 6
2.4.2 Digital Communication (M12 Version only) 6
2.5 Transmitter Installation 6
2.5.1 Sampling Considerations 6
2.5.2 Sampling Hints 8
2.5.3 Transmitter Mounting 11
2.5.3.1 5/8" 18 UNF Version 11
2.5.3.2 3/4" - 16 UNF Version 12
2.5.3.3 G1/2" BSPP Version 12
2.5.3.4 Installation using Additional Thread Adaptor 12

3 MAINTENANCE 14

Figures

Figure 1 DIN43650 Transmitter Unpacking Method 2
Figure 2 Connector Terminal Block Removal 3
Figure 3 Wiring Connections 3
Figure 4 Connector Installation 4
Figure 5 Connector Installation 5
Figure 6 2-Wire Connection Diagram 5
Figure 7 Maximum Load of Easidew - Including Cable Resistance 6
Figure 8 Installation Location 7
Figure 9 Transmitter Mounting - Sensor Block 8
Figure 10 Material Permeability Comparison 9
Figure 11 Dead volume 10
Figure 12 Transmitter Mounting - Pipe or Duct 11
Figure 13 Transmitter Mounting with Adapter 13
Figure 14 Replacement of HDPE Guard 14
Figure 15 Dimensions - Easidew 17

Appendices

Appendix A Technical Specifications 17
Appendix B Quality, Recycling & Warranty Information 20
Appendix C Return Document & Decontamination Declaration 22
Appendix D Modbus Register Map 24

Safety

The manufacturer has designed this equipment to be safe when operated using the procedures detailed in this manual. The user must not use this equipment for any other purpose than that stated. Do not apply values greater than the maximum value stated.

This manual contains operating and safety instructions, which must be followed to ensure the safe operation and to maintain the equipment in a safe condition. The safety instructions are either warnings or cautions issued to protect the user and the equipment from injury or damage. Use competent personnel using good engineering practice for all procedures in this manual.

Electrical Safety

The instrument is designed to be completely safe when used with options and accessories supplied by the manufacturer for use with the instrument.

Pressure Safety

DO NOT permit pressures greater than the safe working pressure to be applied to the instrument. The specified safe working pressure is 45 MPa (450 barg / 6500 psig). Refer to the Technical Specifications in Appendix A.

Toxic Materials

The use of hazardous materials in the construction of this instrument has been minimized. During normal operation it is not possible for the user to come into contact with any hazardous substance which might be employed in the construction of the instrument. Care should, however, be exercised during maintenance and the disposal of certain parts.

Repair and Maintenance

The instrument must be maintained either by the manufacturer or an accredited service agent. For Michell Instruments' contact information please go to www.michell.com.

Calibration

The recommended calibration interval for this instrument is 12 months unless it is to be used in a mission-critical application or in a dirty or contaminated environment in which case the calibration interval should be reduced accordingly. The instrument should be returned to the manufacturer, Michell Instruments Ltd., or one of their accredited service agents for re-calibration.

Safety Conformity

This product meets the essential protection requirements of the relevant EU and US standards and directives. Further details of applied standards may be found in the Technical Specifications in Appendix A.

Abbreviations

The following abbreviations are used in this manual:

barg	pressure unit (=100 kP or 0.987 atm) gauge
ºC	degrees Celsius
ºF	degrees Fahrenheit
DC	direct current
ft-lbs	foot-pound force
g	grams
in	inch(es)
µm	micrometer
m/sec	meters per second
mA	milliampere
max	maximum
mm	millimetres
MPa	megapascal
Nl/min	normal liters per minute
Nm	Newton meter
oz	ounces
ppm_V	parts per million by volume
psig	pounds per square inch
RH	relative humidity
scfh	standard cubic feet per hour
scfs	standard cubic feet per second
T	temperature
V	Volts
Ω	Ohms
ø	diameter

Warnings

The following general warning listed below is applicable to this instrument. It is repeated in the text in the appropriate locations.



Where this hazard warning symbol appears in the following sections it is used to indicate areas where potentially hazardous operations need to be carried out.

1 INTRODUCTION

The Michell Instruments Easidew is a 4-20mA loop-powered dew-point transmitter, designed to make dew point measurements in a flowing sample. The Easidew transmitter is available with 3 different process connections:

- 5/8" - 18 UNF : Easidew 2-wire, Easidew M12
- 3/4" - 16 UNF : Easidew 34, Easidew M12
- G1/2 : Easidew M12

The Easidew 2-wire is available with a choice of electrical connections:

- DIN 43650 Form C
- M12 5-Pin

2 INSTALLATION

2.1 Unpacking the Instrument

On delivery, please check that all the following standard components are in the packing tube:

- Easidew Transmitter
- Certificate of Calibration
- Connector (for sensor/cable)

The Transmitter will also be supplied with a process seal, which will be fitted to the unit. Depending on the version, this will either be a bonded seal (5/8" or G1/2" thread versions) or an o-ring seal (3/4" thread versions).

Unpack the dew-point transmitter tube as follows:

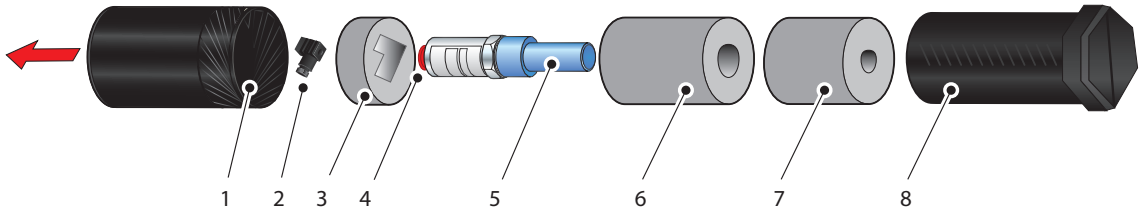

Figure 1 *DIN43650 Transmitter Unpacking Method*

1. Unscrew the cap (1) from the packing tube (8).
2. Remove the foam block (3) containing the connector (2).
3. Pull out the transmitter (5) from the tube, complete with the two foam covers (6) and (7) and the red protective cap (4).
4. Remove the foam covers from the transmitter but leave the blue plastic protective cover (5) and the red cap (4) in place until ready for installation.

NOTE: The transmitter sensing element is protected while in transit by a blue cover containing a small desiccant capsule. The connection pins are protected by a red plastic cap. None of these plastic items are required for the operation of the transmitter.

NOTE: Keep the connector (2) in a safe place until the transmitter is ready for wiring.

2.2 Preparation of the Sensor Cable

The sensor cable is NOT supplied as standard. Cables can be obtained by contacting your local Michell Instruments representative (see www.michell.com for details).

DIN 43650 Version

Cable connection to the Easidew transmitter is made via the removable connector. Removing the central screw enables the connector terminal block to be removed from the outer housing by using a small screwdriver to prise it clear.

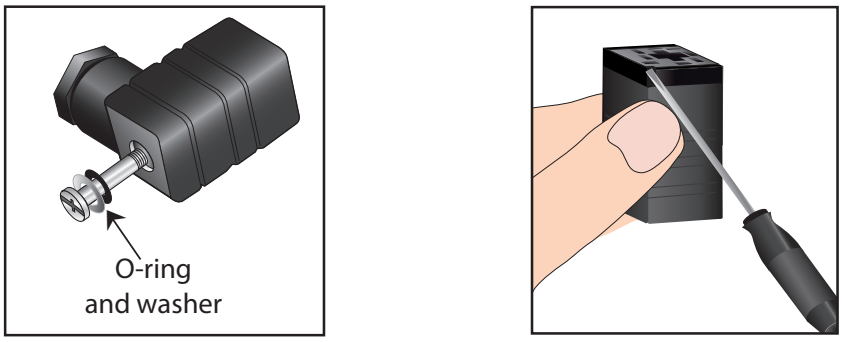

Figure 2 *Connector Terminal Block Removal*

Caution: When removing the central screw ensure that the small sealing O-ring and the washer are retained on the screw and are present during re-installation.

The sensor cables are terminated as per the following diagram:

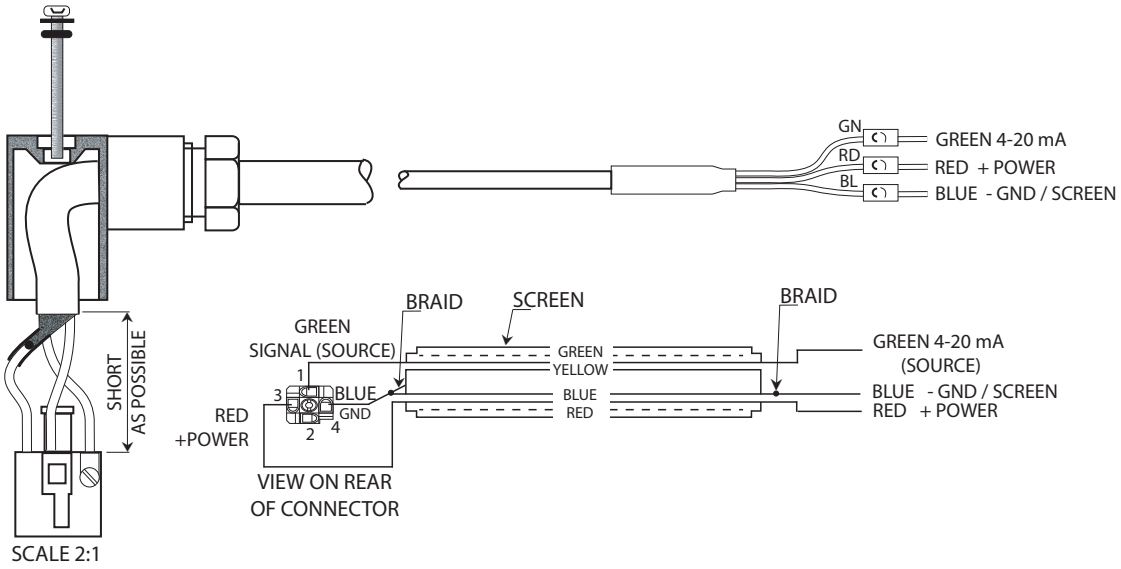

Figure 3 *Wiring Connections*

Note: The screen should only be connected to a ground point at either the transmitter installation side, or at the receiving equipment. Failure to observe this precaution can result in ground loops and equipment malfunction.

Always connect the 4-20 mA return signal to a suitable load (see *Figure 3)* before the power is applied. Without this connection, the transmitter may be damaged if allowed to operate for prolonged periods.

M12 5-Pin Version

Cables with moulded M12 connectors are available from Michell Instruments in the following lengths:

- 0.8m
- 2m
- 5m

4-20 mA 2-wire	
PIN 1	Modbus B
PIN 2	Modbus A
PIN 3	4-20 mA
PIN 4	Power supply
PIN 5	0V

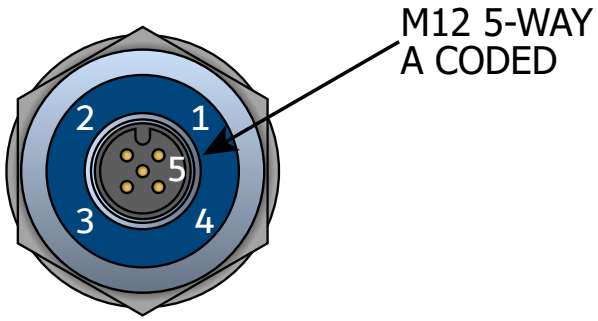

Figure 4 *Sensor Connector Installation*

The other end of the sensor cable is unterminated, for straightforward connection into the desired monitoring system.

	CABLE ASSEMBLY CONNECTIONS	
FUNCTION	PIN	WIRE COLOUR
MODBUS B	1	BROWN
MODBUS A	2	WHITE
4 - 20 mA	3	BLUE
POWER SUPPLY	4	BLACK
Ov	5	GREY

Figure 5 *Cable connections*

If longer cable runs are required, off-the-shelf 5-pin M12 cables can be connected between the Easidew transmitter and the cable provided by Michell Instruments.

Note: The screen should only be connected to a ground point at either the transmitter installation side, or at the receiving equipment. Failure to observe this precaution can result in ground loops and equipment malfunction.

2.3 Cable Connection

DIN 43650 Version

To ensure the specified ingress protection is achieved, when installing the connector, the securing screw (with the O-ring and washer) must be tightened to a minimum torque of 3.4 Nm (2.5 ft-lbs). The sensor cable used must be a minimum diameter of 4.6mm (0.2").

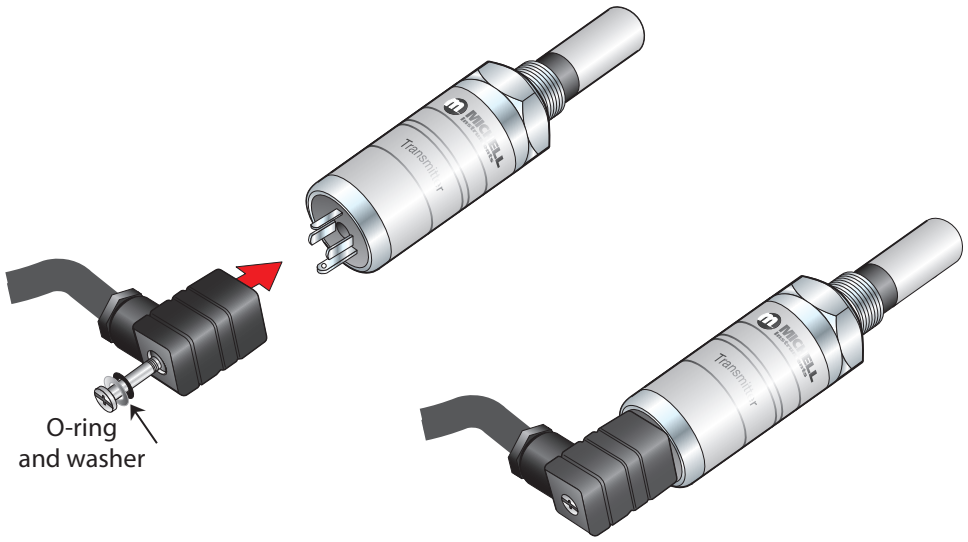

Figure 6 *Connector Installation*

M12 5-Pin Version

The connector should be installed by aligning the locating pin on the transmitter with the slot on the cable. The connector can then be pushed into place and rotated until finger-tight.

2.4 Electrical Schematic

Note: The screen should only be connected to a ground point at either the transmitter installation side, or at the receiving equipment. Failure to observe this precaution can result in ground loops and equipment malfunction.

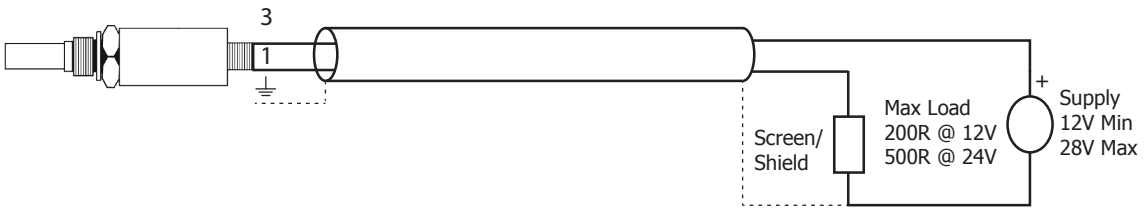

Figure 7 *2-Wire Connection Diagram*

2.4.1 Electrical Boundaries

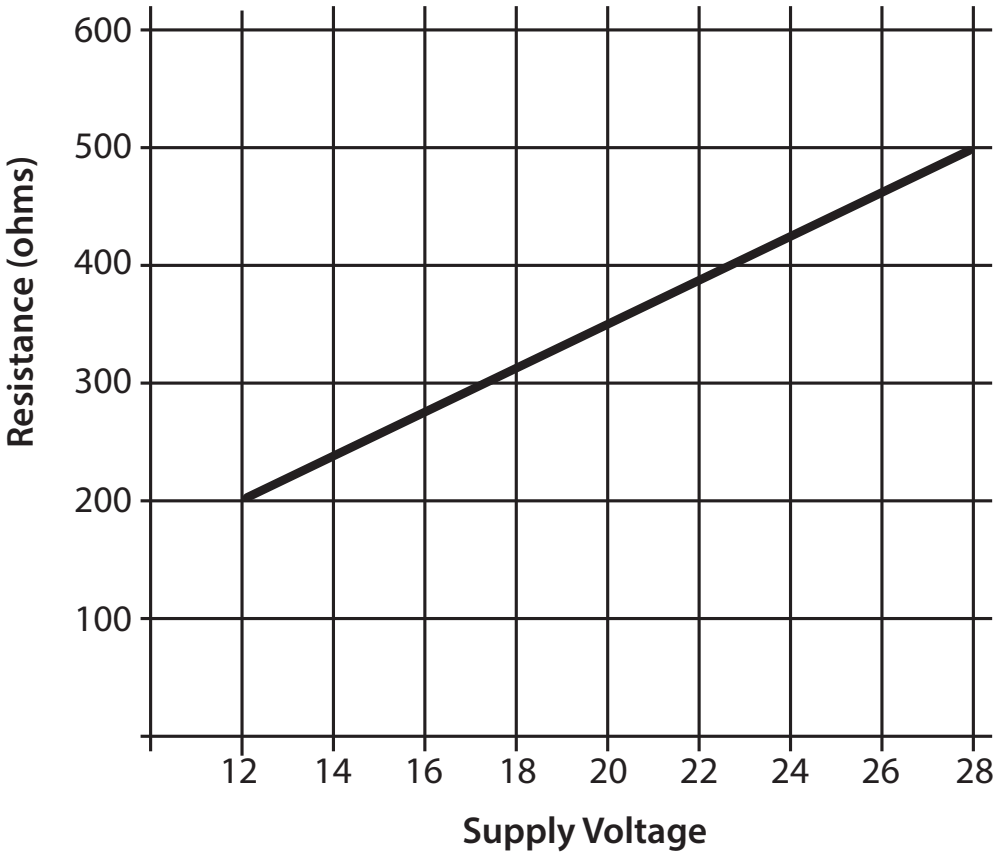

Figure 8 *Maximum Load of Easidew - Including Cable Resistance*

2.4.2 Digital Communication (M12 Version only)

Modbus RTU over RS485 communication is available on the Easidew M12, and can be used simultaneously with the 2-wire current output. Section 2.2 describes the electrical connections to the transmitter.

The Modbus register map can be found at the end of this manual.

2.5 Transmitter Installation

2.5.1 Sampling Considerations

There are two basic methods of measuring a sample with the Easidew Transmitter:
In-situ measurements are made by placing the transmitter inside the environment to be measured.
Extractive measurements are made by installing the sensor into a block within a sample handling system, and flowing the sample outside of the environment to be measured through this system.

Extractive measurements are recommended when the conditions in the environment to be measured are not conducive to making reliable measurements with the product.

Examples of such conditional limitations are:

- Excessive flow rate
- Presence of particulates matter
- Presence of entrained liquids
- Excessive sample temperature

The basic considerations for each measurement type are as follows:

In-Situ

1. **Dew-Point Sensor Position** – will the sensor see an area of the environment that is representative of what you want to measure?

For example, if the sensor is to be mounted into a glove box, there are three different positions in which it could be installed – each giving a different measurement:

- Position A is on the purge inlet. In this position the sensor will confirm the dew point of the gas entering the glove box, but will not detect any leaks in the glove box itself, or any moisture released from the work piece.
- Position B is on the gas outlet. In this position the sensor will be exposed to the gas leaving the glove box, and will therefore be detecting any moisture which has entered into the system (e.g. ingress/leaks), or has been released by the work piece.
- Position C is in the glovebox itself, in this position the sensor will be only detecting any moisture in its immediate vicinity. Leaks not in close proximity to the measurement point may not be detected as this moisture could be drawn directly to the outlet.

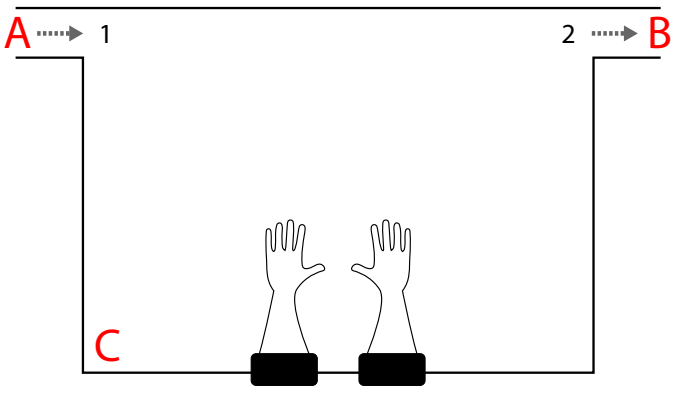

1. Purge Inlet
2. Gas Outlet

Figure 9 *Installation Location*

If the transmitter is to be mounted directly into a pipe or duct, then consider that the installation point should not be too close to the bottom of a bend where oil or other condensate may collect.

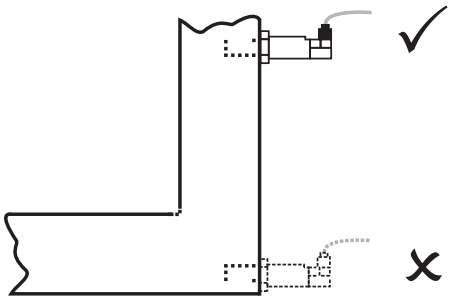

Figure 10 *Installation Location*

2. **Gas speed** – if you are planning on installing the sensor in a duct, consider how fast the sample gas is moving through it.

   If the gas speed is very low, or occasionally static, then the moisture content through the length (and width, if it is more than a few cm across) of the duct is unlikely to be uniform.

   Extremely high gas speeds can cause damage to the sensor. Direct insertion is not recommended in gas speeds in excess of 10m/s (32.8ft/s).

3. **Particulates** – Particulates travelling at speed can cause severe and irreversible damage to the sensor. At low velocity they can cling to the sensor, reducing its' surface area, and therefore response speed.

   The sensor is provided with a basic level of particulate protection in the form of a sintered guard; either HDPE (10µm pore size) or Stainless Steel (80µm pore size). If the sample stream contains smaller particulates than this, or generally large amounts of dust; extractive measurement is recommended to accommodate proper in-line filtration.

4. **Sample Temperature** – Although the Easidew can be operated at sample temperatures up to 70°C, it is advisable to keep the sample temperature as close to ambient, and as stable as possible to keep adsorption & desorption characteristics as consistent as possible (see section X.X Sampling Hints for more information).

Extractive

If the sensor is to be mounted into a sample conditioning system, then the above points are still of relevance, but it is important to consider the extraction point itself – make sure that the chosen extraction point is representative of the process, i.e. that the sample of interest is flowing past the extraction point, and it is not being pulled from a dead volume.

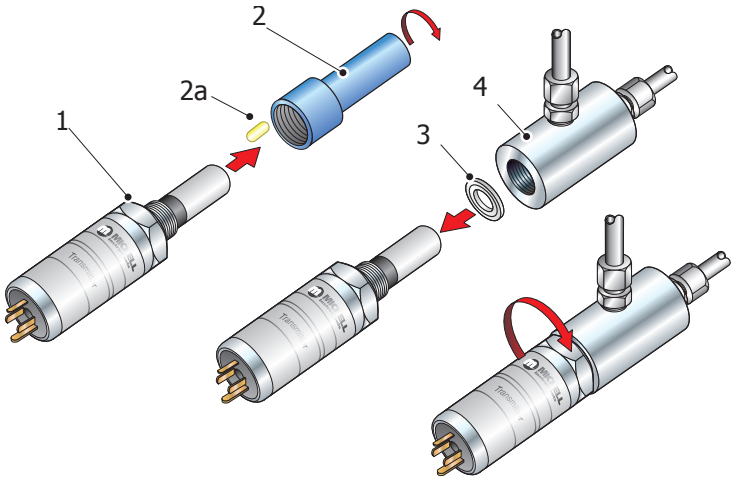

Figure 11 *Transmitter Mounting - Sensor Block*

2.5.2 Sampling Hints

Measurement of moisture content is a complex subject, but does not need to be difficult. This section aims to explain the common mistakes made in measurement situations, the causes of the problem, and how to avoid them. Mistakes and bad practices can cause the measurement to vary from the expectation; therefore a good sampling technique is crucial for accurate and reliable results.

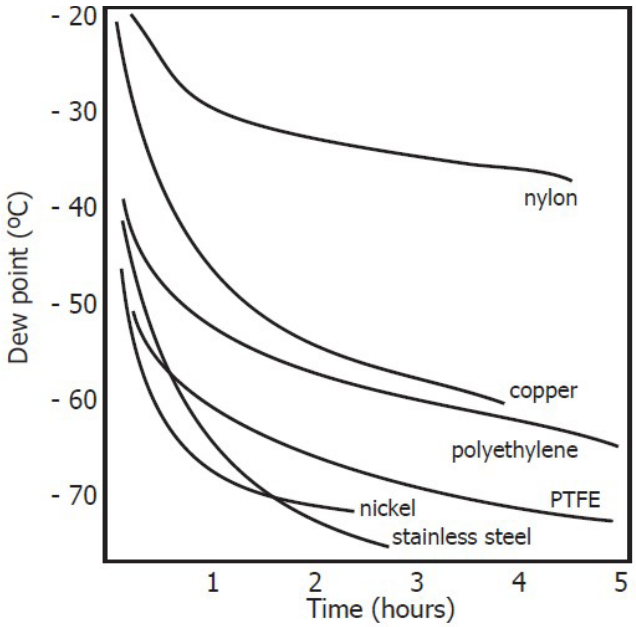

Figure 12 *Material Permeability Comparison*

All materials are permeable to water vapour, as the water molecule is extremely small compared to the structure of solids, even when compared to the crystalline structure of metals. The graph above shows the dew point inside tubing of different materials when purged with very dry gas, where the exterior of the tubing is in the ambient environment.

Many materials contain moisture as part of their structure, particularly organic materials (natural or synthetic), salts (or anything which contains them) and anything which has small pores. It is important to ensure that the materials used are suitable for the application.

If the partial water vapour pressure exerted on the outside of a compressed air line is higher than on the inside, the atmospheric water vapour will naturally push through the

porous medium causing water to migrate into the pressurised air line. This effect is called transpiration.

Adsorption and Desorption
Adsorption is the adhesion of atoms, ions, or molecules from a gas, liquid, or dissolved solid to the surface of a material, creating a film. The rate of adsorption is increased at higher pressures and lower temperatures.

Desorption is the release of a substance from or through the surface of a material. In constant environmental conditions, an adsorbed substance will remain on a surface almost indefinitely. However, as the temperature rises, so does the likelihood of desorption occurring.

In practical terms, as the temperature of the environment fluctuates, water molecules are adsorbed and desorbed from the internal surfaces of the sample tubing, causing small fluctuations in the measured dew point.

Sample Tubing Length
The sample point should always be as close to the critical measurement point as possible, in order to obtain a truly representative measurement. The length of the sample line to the sensor or instrument should be as short as possible. Interconnection points and valves trap moisture, so using the simplest sampling arrangement possible will reduce the time it takes for the sample system to dry out when purged with dry gas.

Over a long tubing run, water will inevitably migrate into any line, and the effects of adsorption and desorption will become more apparent. It is clear from the graph shown above that the best materials to resist transpiration are stainless steel and PTFE.

Trapped Moisture
Dead volumes (areas which are not in a direct flow path) in sample lines, hold onto water molecules which are slowly released into the passing gas; this results in increased purge and response times, and wetter than expected readings. Hygroscopic materials in filters, valves (e.g. rubber from pressure regulators) or any other parts of the system can also trap moisture.

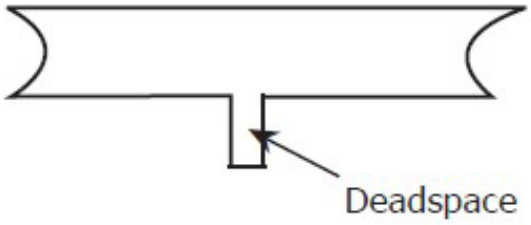

Figure 13 *Dead volume*

Sample Conditioning
Sample conditioning is often necessary to avoid exposure of sensitive measuring components to liquids and other contaminants which may cause damage or affect the accuracy over time, depending on the measurement technology.

Particulate filters are used for removing dirt, rust, scale and any other solids that may be in a sample stream. For protection against liquids, a coalescing filter should be used.

The membrane filter is a more expensive but highly effective alternative to a coalescing filter. It provides protection from liquid droplets, and can even stop flow to the analyser completely when a large slug of liquid is encountered.

Condensation and Leaks
Maintaining the temperature of the sample system tubing above the dew point of the sample is vital to prevent condensation. Any condensation invalidates the sampling process as it changes the water vapour content of the gas being measured. Condensed liquid can alter the humidity elsewhere by dripping or running to other locations where it may re-evaporate.

The integrity of all connections is also an important consideration, especially when sampling low dew points at an elevated pressure. If a small leak occurs in a high pressure line, gas will leak out but vortices at the leak point and a negative vapour pressure differential will also allow water vapour to contaminate the flow.

Flow Rates
Theoretically flow rate has no direct effect on the measured moisture content, but in practice it can have unanticipated effects on response speed and accuracy. The optimal flow rate varies depending on the measurement technology, and can always be found in the instrument or sensor manual.

An inadequate flow rate can:

- Accentuate adsorption and desorption effects on the gas passing through the sampling system.
- Allow pockets of wet gas to remain undisturbed in a complex sampling system, which will then gradually be released into the sample flow.
- Increase the chance of contamination from back diffusion: ambient air that is wetter than the sample can flow from the exhaust back into the system. A longer exhaust (sometimes called a pigtail) can also help alleviate this problem.
- Slow the response of the sensor to changes in moisture content.

2.5.3 Transmitter Mounting

Once an installation location has been chosen, this point will require a thread to match the transmitter thread. Fixing dimensions are shown in Figure 6. For circular pipework, to ensure the integrity of a gas tight seal, a mounting flange will be required on the pipework in order to provide a flat surface to seal against.

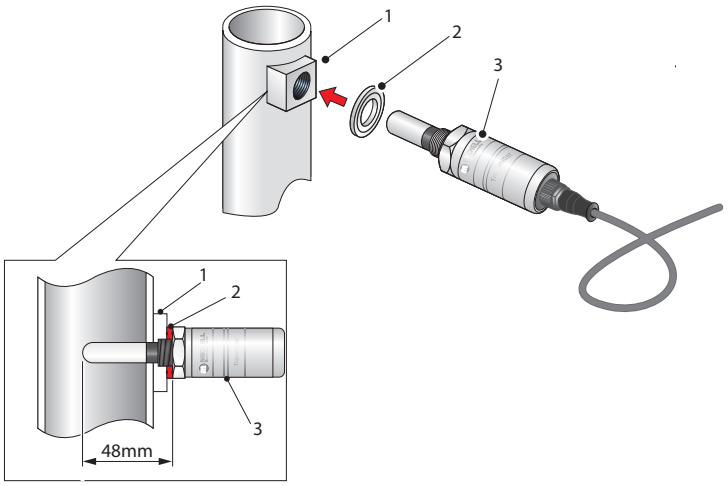

Figure 14 *Transmitter Mounting - Pipe or Duct*

2.5.3.1 5/8" 18 UNF Version

1. Remove the protective cover and desiccant capsule from the transmitter and retain for future use
2. Prevent any contamination of the sensor before installation by handling the transmitter by the main body only, avoiding contact with the sensor guard.
3. Pass the bonded seal over the 5/8"- 18 UNF mounting thread.
4. Screw the transmitter into the sampling location or sample block by hand using the wrench flats only. **DO NOT grip and twist the sensor cover when installing the sensor.**
5. When installed, fully tighten using a wrench to a torque setting of 30.5 Nm (22.5 ft-lbs)

2.5.3.2 3/4" - 16 UNF Version

1. Remove the protective cover and desiccant capsule from the transmitter and retain for future use.
2. Prevent any contamination of the sensor before installation by handling the transmitter by the main body only, avoiding contact with the sensor guard.
3. Ensure that the O-ring is seated in the recess at the top of the transmitter body.
4. Screw the transmitter into the sampling location or sample block by hand using the wrench flats only. **DO NOT grip and twist the sensor cover when installing the sensor.**
5. When installed, fully tighten using a wrench to a torque setting of 40 Nm (29.5 ft-lbs).

2.5.3.3 G1/2" BSPP Version

1. Remove the protective cover and desiccant capsule from the transmitter and retain for future use
2. Prevent any contamination of the sensor before installation by handling the transmitter by the main body only, avoiding contact with the sensor guard.
3. Pass the bonded seal over the G1/2" mounting thread.
4. Screw the transmitter into the sampling location or sample block by hand using the wrench flats only. **DO NOT grip and twist the sensor cover when installing the sensor.**
5. When installed, fully tighten using a wrench to a torque setting of 30.5 Nm (22.5 ft-lbs)

2.5.3.4 Installation using Additional Thread Adaptor

1. Remove the protective cover and desiccant capsule from the transmitter and retain for future use
2. Prevent any contamination of the sensor before installation by handling the transmitter by the main body only, avoiding contact with the sensor guard.
3. Pass the bonded seal over the 5/8"- 18 UNF mounting thread.
4. Screw the transmitter into the adaptor, and tighten to 30.5 Nm (22.5 ft-lbs)
5. **NOTE: Use the flats of the hexagonal nut and not the sensor body.**
6. Screw the transmitter (1) with its seal (3) and adapter (4) into the sampling location block (and fully tighten using a wrench to the following torque settings:

- G 1/2" BSP 56 Nm (41.3 ft-lbs)
- 3/4" - 16 UNF ` 40 Nm (29.5 ft-lbs)
- 1/2" NPT Use a suitable sealant e.g. PTFE tape using correct taping procedures

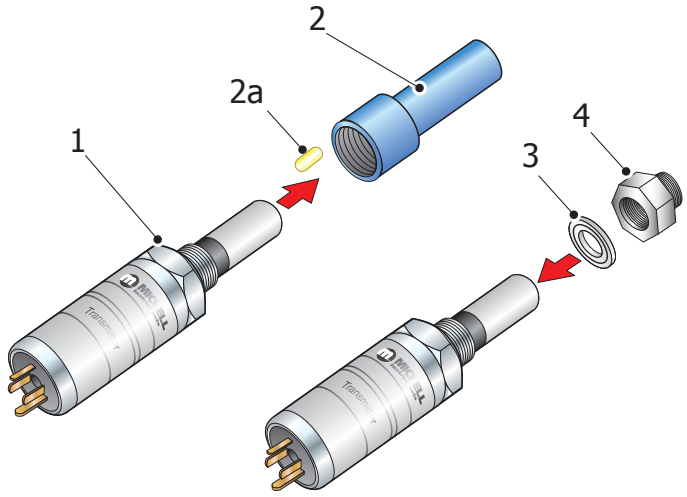

Figure 15 *Transmitter Mounting with Adapter*

MAINTENANCE

Calibration

Annual recalibration of the Easidew is recommended to maintain the performance. Calibration services traceable to the UK *National Physical Laboratory* (NPL) and the US *National Institute of Standards and Technology* (NIST) are provided by Michell Instruments.

Michell Instruments offers a variety of re-calibration and exchange sensor schemes to suit specific needs. A Michell representative can provide detailed, custom advice (for Michell Instruments' contact information go to www.michell.com).

Sensor Guard Replacement

The sensor is supplied with a white HDPE guard (standard) or a stainless steel guard (if specified at time or order).

The sensor guard should be replaced if the surface shows any damage or signs of discolouration. When replacing a guard, make sure to wear clkean disposable gloves, and handle by the threaded base section only.

Replacement HDPE or stainless steel guards can be ordered from your Michell Instruments representative.

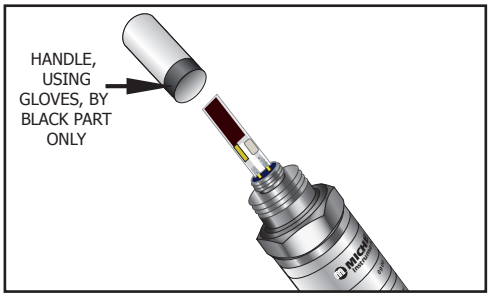

Figure 16 *Replacement of HDPE Guard*

Bonded Seal

If the supplied bonded seal is damaged or lost, a pack of 5 replacement bonded seals can be obtained by your Michell Instruments representative.

O-ring Seal

If the supplied O-ring seal is damaged or lost a pack of 5 replacement O-ring seals can be obtained by contacting your Michell Instruments representative.

Appendix A

Technical Specifications

Appendix A Technical Specifications

Product	Easidew, Easidew M12 and Easidew 34 Transmitter	Easidew I.S. Transmitter
Performance Specifications		
Measurement range	–110 to +20°C dew point; –100 to +20°C dew point; non standard ranges available on request	
Accuracy	±2°C dew point*	
Response time	5 mins to T95 (dry to wet)	
Repeatability	0.5°C dew point	
Calibration	Traceable 13 point calibration certificate	
Electrical Specifications		
Output signal	4–20 mA (2-wire connection, current source); User configurable over range **Easidew M12:** Modbus RTU over RS485	
Output	Dew point or moisture content	
Analog output scaled range	**Dew point:** –110 up to +20°C; **Moisture content in gas:** 0– up to 3000 $ppm_{v;}$	
Supply voltage	12 to 28 V DC	
Load resistance	Max 250 Ω @ 14 V (500 Ω @ 24 V)	
Current consumption	23 mA max, depending on output signal	
CE conformity	2014/30/EU	
UL approval	Approved	
UL61010-1 & CAN/CSA C22.2 No. 61010-1		
Operating Specifications		
Operating temperature	–40 to +60°C	
Compensated temperature range	-20 to +50°C	
Storage Temperature	-40 to +60°C	
Operating pressure	45 MPa (450 barg) maximum	
Flow rate	1 to 5 Nl/min mounted in standard sampling block; 0 to 10 m/sec direct insertion	
Mechanical Specifications		
Ingress protection	IP66 in accordance with standard BS EN 60529:1992; NEMA 4 protection in accordance with standard NEMA 250–2003 **Easidew M12**: IP65	
Intrinsically safe area certificates		ATEX: II 1 G Ex ia IIC T4 Ga (-20 to +70 °C) IECEx: EX ia IIC T4 Ga (-20 to +70 °C) TC TR@ 0Ex ia IICT4 Ga (-20 to +70 °C) FM: Class I, Division 1, Groups A B C D, T4 $_{C}CSA_{US}$: Class I, Division 1, Groups A B C D, T4
Oxigen service	**Optional: cleaned for enriched oxygen service**	
Housing material	316 stainless steel	
Dimensions	MiniDIN 43650 form C L=132mm x ø45mm (with connector cable) **Easidew M12:** M12 5 pin L = 155mm x ø45mm (with connector cable)	
Filter (sensor protection)	**Standard:** HDPE <10µm **Optional:** 316 stainless steel sintered guard <80µm	
Process connection	**Easidew:** 5/8" - 18 UNF **Easidew:** G1/2" BSPP **Easidew 34:** 3/4" - 16 UNF **Easidew M12:** 5/8" -18 UNF, 3/4" - 16 UNF, G1/2" BSP	
Weight	150g	
Electrical connections	**Easidew:** MiniDIN 43650 form C **Easidew M12:** M12 5 Pin (A coded)	
Mating Electrical Connectors	Mating connector supplied as standard **Easidew M12:** optional 0.8, 2, 5 metre M12 A coded connector/cable available	
Diagnostic conditions (factory programmed)	**Conditions** Sensor fault Under-range dew point Over-range dew point **Output** 23 mA 4 mA 20 mA	
Approved galvanic isolators		KFD2-CR-EX1.20200 KFD2-CR-EX1.30200 KFD0-CS-EX1.50P KFD0-CS-EX2.50P KFD2-STC4-EX1.H MTL5041 MTL5040

NOTES * Over Compensated Temperature Range

Dimensions

Product Dimensions

Easidew

Easidew M12

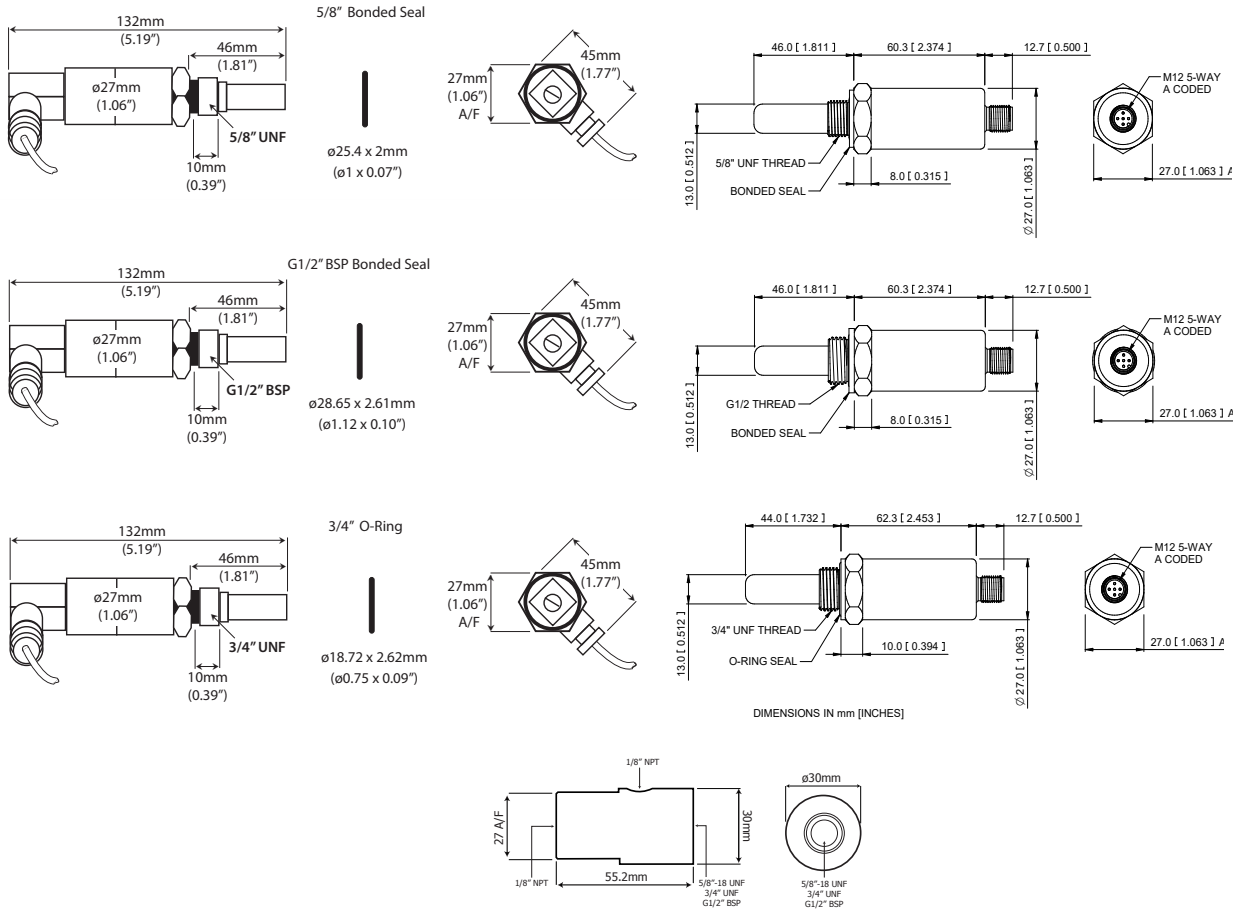

Optional Sample Block
(see accessories and spare parts)

Figure 6 *Dimensions - Easidew*

Appendix B

Quality, Recycling & Warranty Information

Appendix B Quality, Recycling & Warranty Information

Michell Instruments is dedicated to complying to all relevant legislation and directives. Full information can be found on our website at:

www.michell.com/compliance

This page contains information on the following directives:

- ATEX Directive
- Calibration Facilities
- Conflict Minerals
- FCC Statement
- Manufacturing Quality
- Modern Slavery Statement
- Pressure Equipment Directive
- REACH
- RoHS2
- WEEE2
- Recycling Policy
- Warranty and Returns

This information is also available in PDF format.

Appendix C

Return Document & Decontamination Declaration

Appendix C Return Document & Decontamination Declaration

Decontamination Certificate

IMPORTANT NOTE: Please complete this form prior to this instrument, or any components, leaving your site and being returned to us, or, where applicable, prior to any work being carried out by a Michell engineer at your site.

Instrument			Serial Number	
Warranty Repair?	YES	NO	Original PO #	
Company Name			Contact Name	
Address				
Telephone #			E-mail address	
Reason for Return /Description of Fault:				

Has this equipment been exposed (internally or externally) to any of the following? Please circle (YES/NO) as applicable and provide details below		
Biohazards	YES	NO
Biological agents	YES	NO
Hazardous chemicals	YES	NO
Radioactive substances	YES	NO
Other hazards	YES	NO

Please provide details of any hazardous materials used with this equipment as indicated above (use continuation sheet if necessary)		
Your method of cleaning/decontamination		
Has the equipment been cleaned and decontaminated?	YES	NOT NECESSARY

Michell Instruments will not accept instruments that have been exposed to toxins, radio-activity or bio-hazardous materials. For most applications involving solvents, acidic, basic, flammable or toxic gases a simple purge with dry gas (dew point <-30°C) over 24 hours should be sufficient to decontaminate the unit prior to return.
Work will not be carried out on any unit that does not have a completed decontamination declaration.

Decontamination Declaration

I declare that the information above is true and complete to the best of my knowledge, and it is safe for Michell personnel to service or repair the returned instrument.

Name (Print)		Position	
Signature		Date	

MICHELL Instruments

F0121, Issue 2, December 2011

Appendix D

Modbus Register Map

Appendix D Modbus Register Map

All the data values relating to the Easidew are stored in 16-bit wide holding registers. Registers can contain either measured or calculated values (dew-point, temperature, etc.), or configuration data (output settings).

Modbus RTU Implementation
This is a partial implementation of the Modbus RTU Standard with the following codes implemented:

Function Code	Description
3	Read Holding Register
6	Write Holding Register
16	Write Multiple Holding Registers

Register Types

Data Type	Description
uint16	16 bit unsigned integer, can contain options list e.g. 0 = Dew Point, 1 = Temperature.
int16	16 bit signed integer.
int32	32 bit signed integer, stored across 2 16 bit registers.
special	Refer to register description/comments for data structure.

Serial Port Settings (RS485)
9600 Baud Rate, 8 Data Bits, No Parity, 1 Stop Bit, No Flow Control

	http://www.simplymodbus.ca/FAQ.htm is an excellent resource covering the basics of the Modbus protocol. Full descriptions of the function codes (FC03/FC06/FC16) can be found in the sidebar.
	https://www.scadacore.com/tools/programming-calculators/online-hex-converter/ is an excellent resource for determining register types/byte order issues in raw received Modbus data.

Register Address

Dec	Hex	Access	Data Type	Description	Comment
0	0000	R/W	uint16	Instrument Modbus Address	1-255
3	0003	R	special	Status/Fault Indication	
				bit0, Sensor short circuit bit1, Sensor open circuit bit2, Thermistor short circuit bit3, Thermistor open circuit bit4, Sensor over range bit5, Sensor under range bit6, Thermistor over range bit7, Thermistor under range	
4	0004	R/W	special	Output Configuration	
				<u>Sensor fault output</u> bit0, 4mA bit1, 20mA bit2, 23mA bit3, 3mA <u>Dew-point under-range output</u> bit4, 4mA bit5, 20mA bit6, 23mA bit7, 3mA <u>Dew-point over-range output</u> bit8, 4mA bit9, 20mA bit10, 23mA bit11, 3mA <u>Output parameter</u> bit12, Temperature bit13, ppmV bit14, ppmW bit15, Natural gas	Only one bit can be set for each parameter, for example 'sensor fault' can be EITHER 4mA OR 20mA OR 23mA OR 3mA. If bits 13 – 16 are not set, then the output will be dew point. Natural gas parameter set in register 78.
8	0008	R	special	Transmitter Firmware Version	0x0100 = 1.0
10	000A	R/W	int16	Measurement Range Low	10x multiplier, i.e. -1000 = -100.0
11	000B	R/W	int16	Measurement Range High	10x multiplier, i.e. 200 = 20.0
15	000F	R	special	Sensor Batch Number	Batch 0xA123 Serial 0x0001 Complete sensor serial would be A123-001
16	0010	R	special	Sensor Serial Number	
17	0011	R/W	special	Year of Calibration	0x2018 = 2018
18	0012	R/W	special	Month & Day of Calibration	0x317 = March 17th
54	0036	R/W	int16	Pressure value for ppmV (barg)	10x multiplier, i.e. 100 = 10.0

78	004E	R/W	special	Natural Gas Configuration & Precision Select	Natural gas configuration bit1, 0=IGT, 1=ISO bit2, lb/MMscf bit3, ppmV NG bit4, mg/m^3 NG Precision Select bit15, 0=1 Decimal Place, 1=4 Decimal Places

Register configuration in 1 decimal place precision mode

Dec	Hex	Access	Data Type	Description	Comment
1	0001	R	int16	Humidity Parameter	Default dew-point, selected with register 4 (and 78 for Natural gas) 10x multiplier, i.e. -811 = -81.1
2	0002	R	int16	Ambient Temperature	10x multiplier, i.e. 214 = 21.4

Register configuration in 4 decimal place precision mode

Dec	Hex	Access	Data Type	Description	Comment
1	0001	R	special	Humidity Parameter (Low Word)	Default dew-point, selected with register 4 (and 78 for Natural gas) 1000x multiplier, i.e. 14321 = 1.4321
2	0002	R	special	Humidity Parameter (High Word)	
7	0007	R	int16	Ambient Temperature	10x multiplier, i.e. 214 = 21.4

NOTES:



http://www.michell.com