# FLEXFLO® A2P

Specially designed for pools, spas, and water parks

Feed rates to 15.9 GPH (60.2 LPH)

Pressures to 50 PSI

100:1 turndown ratio

Tube Failure Detection (TFD) system

Variable speed DC motor

2 -year warranty




NEMA 4X

Exclusive: TFD system Tube Failure Detection

Patents 7,001,153 & 7,284,964

Patents: 4,496,295, 7,001,153, 7,284,964 and other patents pending

## Features:

- Peristaltic pump design does not have valves that can clog requiring maintenance.
- Self priming - even against maximum line pressure. Bypass valves are not required. Cannot vapor lock or lose prime.
- Output rates to: 15.9 GPH (60.2 LPH) and pressures up to 50 PSI (3.4 Bar).
- Variable speed DC motor.
- Patented Tube Failure Detection (TFD) system. Senses tube failure by detecting chemical in the pump head. No false triggering.
- Remote Start/Stop: Non-powered dry contact closure for remote start/stop.
- Outputs include: one 250V/3A relay to monitor TFD (Tube Failure System) and FVS (Flow Verification System).
- Two PVDF molded squeeze rollers and two alignment rollers for optimum squeeze, unparalleled accuracy, and tube life.
- Heavy duty rotor - single piece plastic rotor means no flexing and increased accuracy with no metal springs or hinges to corrode.
- Chemically resistant tubing capable of pumping bleach (sodium hypochlorite), calcium hypochlorite 20%, and muriatic acid (hydrochloric acid).

# Engineering Specifications:

**Maximum Working Pressure (Excluding pump tubes):**
50 psig (3.4 bar)
**NOTE**: See the individual pump tube assembly maximum pressure ratings.

**Maximum Suction Lift:**
30 ft. of water at sea level (14.7 atm psi)

**Ambient Operating Temperature:**
14°F to 125°F (-10°C to 52°C)

**Ambient Storage Temperature:**
-40°F to 158°F (-40°C to 70°C)

**Operating Voltage:**
115VAC 50/60Hz, 1ph (1.5 Amp Maximum)
230VAC 50/60Hz, 1ph (0.7 Amp Maximum)
220VAC 50/60Hz, 1ph (1.0 Amp Maximum)
240VAC 50/60Hz, 1ph (1.0 Amp Maximum)

**Power Cord Options:**
115V50/60Hz = NEMA 5/15 (USA)
230V50/60Hz = NEMA 6/15 (USA)
220V50/60Hz = CEE 7/VII (EU)
240V50/60Hz = AS 3112 (Australia/New Zealand)

**Motor:**
Brushed DC, 1/8 H.P.

**Duty Cycle:**
Continuous

**Motor Speed Adjustment Range 100:1:**
1.0% - 100% motor speed (1.3 to 130 RPM)

**Enclosure:**
NEMA 4X (IP66), Polyester powder coated aluminum.

**Maximum Overall Dimensions:**
7-1/2" W x 10-1/4" H x 14" D (19 W x 26 H x 35.6 D cm)

**Product Weight:**
28.4 lb. (12.9 Kg)

**Approximate Shipping Weight:**
35 lb. (15.9 Kg)

# Materials of Construction:

## Wetted Components:

**Pump Tube Assembly:**
**Tubing:**.....Flex-A-Prene®
**Adapter Fittings:** PVDF

**NOTE**: This is model specific, and two are provided.

**Injection / Back-Flow Check Valve:**
**Body & Insert:** . . . . . PVDF
**Check Ball:** . . . . . Ceramic
**Spring:** . . . . . Hastelloy C-276
**Ball Seat O-Ring:** . . . . . FKM (optional EPDM)
**Static Seal O-Ring:** . . . . FKM (optional EPDM)

**Ancillary Items Provided:**
**Suction Tubing:** . . . . . 3/8" OD x 1/4" ID x 10' Clear PVC
**Discharge Tubing:** . . . . 3/8" OD x 1/4" ID x 10' Polyethylene (LLDPE)
**Suction Strainer:** . . . . . PVDF

**Suction Strainer:**
**Body:**.....PVDF
**Check Ball:** .....Ceramic
**Ball Seat O-Ring:**.....TFE/P (Optional EPDM)

**With "M" Tubing M/NPT Connections Only:**
**Suction Strainer:**
**Body:**.....PVDF
**Check Ball:** .....Ceramic
**Ball Seat O-Ring:**.....TFE/P (Optional EPDM)

## Non-Wetted Components:

**Enclosure:**
413 Aluminum (Polyester powder coated)

**Pump Head:**
Valox® (PBT) thermoplastic

**Pump Head Cover:**
Polycarbonate for added strength and chemical resistance.
Permanently lubricated sealed motor shaft support ball bearing.

**Cover Screws:**
Stainless steel

**Roller Assembly:**
**Rotor:**.....Valox® (PBT)
**Rollers:** .....PVDF
**Roller Bearings:** .....SS Ball Bearings

**Motor Shaft:**
Chrome plated steel

**TFD System Sensor Pins:**
Hastelloy C-276

**Power Cord:**
3 conductor, SJTW-A water-resistant

**Tube Installation Tool:**
GF nylon

**Mounting Brackets and Hardware:**
316 stainless steel

## Output Specifications:

| Feed Rate | | | Max Speed | Max Pressure | Max Temperature | A2P Model Numbers | | |
|---|---|---|---|---|---|---|---|---|
| **Flex-A-Prene® A2P Tube Pumps** | | | | | | | | |
| **Meets FDA criteria for food \| Excellent chemical resistance \| CIP \| SIP** | | | | | | | | |
| **GPH** | **LPH** | **ML/Min** | **RPM** | **PSI (bar)** | **F (C)** | **115V AC** | **230V AC** | **220V AC** |
| .055 - 5.5 | .208 - 20.8 | 3.47 - 347 | 130 | 50 (3.4) | 185 (85) | A2P24-SNEE | A2P25-SNEE | A2P26-SNEE |
| .159 - 15.9 | .602 - 60.2 | 10.03 - 1003 | 130 | 40 (2.8) | 185 (85) | A2P24-SNGG | A2P25-SNGG | A2P26-SNGG |

**NOTE**: For optimum tube life, specify the pump to operate at the lowest possible RPM and pressure.

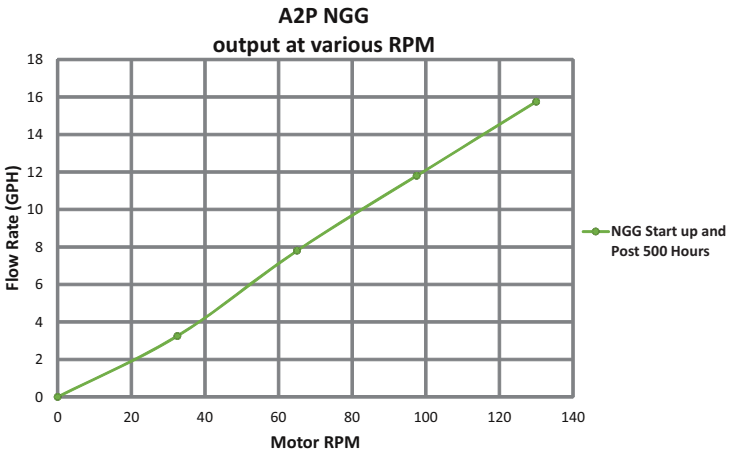


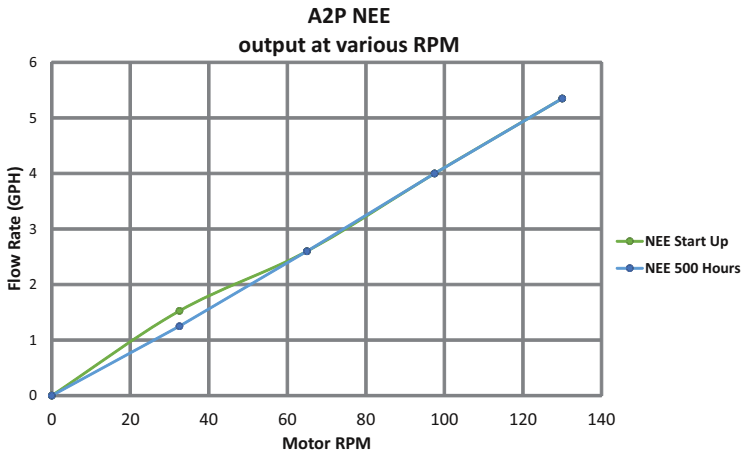


## Dimensions:

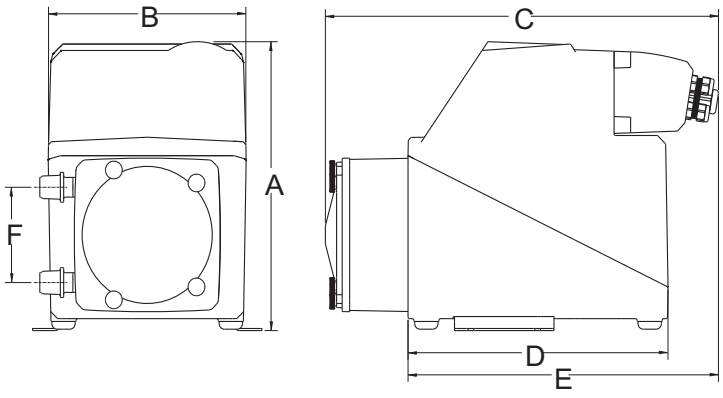


| Dim | A2P Series | |
|---|---|---|
| | Inches | cm |
| A | 10-1/4" | 26 |
| B | 7-1/2" | 19 |
| C | 14" | 35.6 |
| D | 9-1/2" | 24.1 |
| E | 11" | 27.9 |
| F | 3-3/8" | 8.6 |

## Model Number Matrix:

| FlexFlo® Model Number | |
|---|---|
| A2P | FlexFlo® Peristaltic Metering Pump |

| Maximum Motor Speed | |
|---|---|
| 2 | 130 RPM (Maximum rotor rotation speed) |

| Power Cord (Operating voltage requirement 96VAC to 264VAC) | |
|---|---|
| 4 | 115V 50/60Hz, power cord NEMA 5/15 plug (US) |
| 5 | 230V 50/60Hz, power cord NEMA 6/15 plug (US) |
| 6 | 220V 50/60Hz, power cord CEE 7/V11 plug (EU) |
| 8 | 240V 50/60Hz, power cord AS 3112 plug (Australia/New Zealand) |
| 9 | 230V 50/60Hz, power cord BS 1363/A plug (United Kingdom) |
| X | No Power Cord |

| Pump Tube Material, Pump Tube Size, Operating Flow Range | |
|---|---|
| NEE | Flex-A-Prene® .093 ID, 0.055 to 5.5 GPH |
| NGG | Flex-A-Prene® .187 ID, 0.16 to 15.9 GPH |

| A2P | 2 | 4 | - | S | NGG | Sample Model Number |
|---|---|---|---|---|---|---|

Blue-White Industries, Ltd.
5300 Business Drive, Huntington Beach, CA 92649
**Tel:** 714-893-8529 **Fax:** 714-894-9492
www.blue-white.com **Email:** sales@blue-white.com

Patents: 4,496,295 - 7,001,153 - 7,284,964 and other patents pending
All trademarks are the property of their respective owners.