FLEXFLO®

Peristaltic Metering Pump



Exclusive:
TFD system
Tube Failure Detection
Patented

ProSeries 2 TWO-YEAR WARRANTY

SERIES A2P

Operating Manual

Protected by Patents: 8,418,364; 8,215,931;
7,001,153; 7,284,964; 4,496,295
and other patents pending

5300 Business Drive, Huntington Beach, CA 92649, USA
Phone: 714-893-8529 **FAX:** 714-894-9492
E mail: sales@blue-white.com | techsupport@blue-white.com **URL:** www.Blue-White.com

TABLE OF CONTENTS

Section	Heading	Page
1.0	Introduction	3
1.1	Available Models	3
2.0	Engineering Specifications	4
2.1	Materials of Construction	4
3.0	Features	5
3.1	Agency Listings	5
4.0	Installation	6
4.1	Mounting Location	6
4.2	Dimensions	6
4.3	Installing Injection Fitting and Strainer	7
5.0	Power Connections	8
5.1	Wiring Terminal and I/O Schematics	9
6.0	How to Adjust the Output	10
7.0	Tube Failure Detection (TFD)	10
8.0	Alarm Relay	10
9.0	Tube Replacement	11
9.1	Tube Removal	11
9.2	Tube Installation	12
10.0	Pump Maintenance	13
11.0	Pump Head Replacement Parts List	15
	Warranty	16

PLEASE READ ENTIRE INSTRUCTION MANUAL PRIOR TO INSTALLATION AND USE.

1.0 Introduction

Congratulations on purchasing the FlexFlo® A2P variable speed peristaltic metering pump. A peristaltic pump is a type of positive displacement pump used for pumping a variety of fluids.

The FlexFlo® pump is pre-configured for tubing that shipped with your metering pump. Tubing assembly has an Identification number printed on the tube for easy re-order, such as NEE, NGG, etc.

NOTE: Your new pump has been pressure tested at factory with clean water before shipping. You may notice trace amounts of clean water in pre-installed tube assembly. This is part of our stringent quality assurance program at Blue-White Industries, Ltd.

1.1 Available Models

Feed Rate			Max Speed	Max Pressure	Max Temperature	A2P Model Numbers		
Flex-A-Prene® A2P Tube Pumps								
Meets FDA criteria for food | Excellent chemical resistance | CIP | SIP								
GPH	**LPH**	**ML/Min**	**RPM**	**PSI (bar)**	**F (C)**	**115V AC**	**230V AC**	**220V AC**
.055 - 5.5	.208 - 20.8	3.47 - 347	130	50 (3.4)	185 (85)	A2P24-*NEE	A2P25-*NEE	A2P26-*NEE
.16 - 15.9	.60 - 60.2	10.03 - 1003	130	40 (2.8)	185 (85)	A2P24-*NGG	A2P25-*NGG	A2P26-*NGG

* Inlet/outlet connection type
S = 3/8" OD x 1/4" ID tubing compressions type connections
M = 1/2" male NPT

NOTE: For optimum tube life, specify the pump to operate at the lowest possible RPM and pressure.

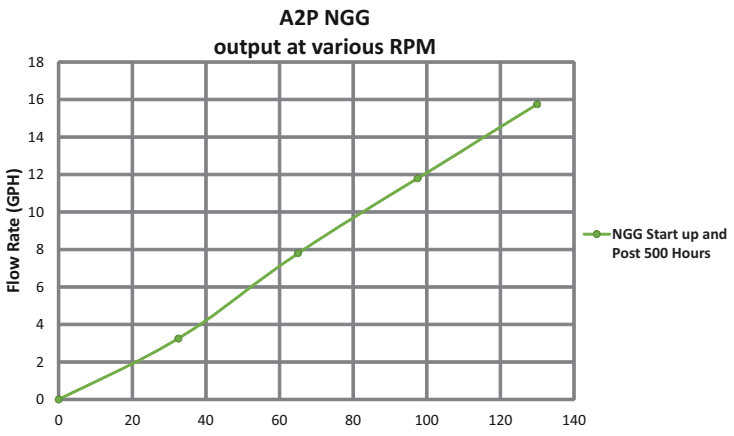

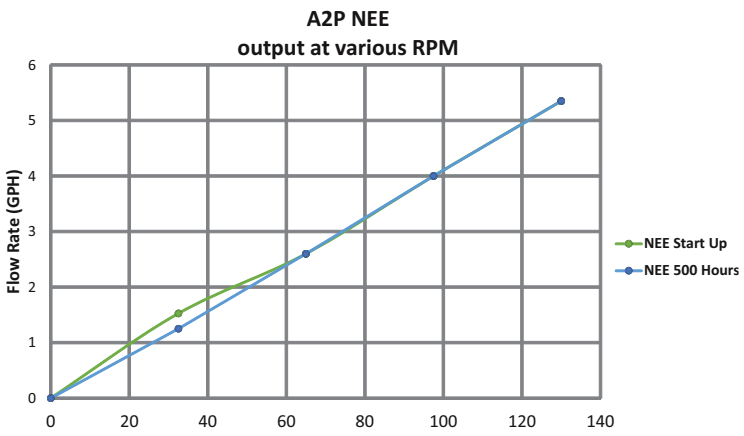

NOTE: It is recommended that the pump be allowed a one hour break-in period before calibrating the new tube.

Optional Extended Brackets

Stainless steel extended brackets allow the pump to be securely mounted to most surfaces (floor, shelf, or skid). Brackets lift the pump up 4-1/2 inches (11.43 cm), for easy pump access in hard to reach areas.

- Raise metering pump 4-1/2 inches (11.43 cm) off the ground or surface.
- Made out of tough Stainless Steel.
- Provides a stable mounting surface.

Model #	Description
72000-380	Extended Mounting Bracket, 1 Pair, SS, 4 SS Screws



2.0 Engineering Specifications

Maximum Working Pressure (Excluding pump tubes):
50 psig (3.4 bar)

NOTE: See the individual pump tube assembly maximum pressure ratings.

Maximum Suction Lift:
30 ft. of water at sea level (14.7 atm psi)

Ambient Operating Temperature:
14°F to 125°F (-10°C to 52°C)

Ambient Storage Temperature:
-40°F to 158°F (-40°C to 70°C)

Operating Voltage:
115VAC/50/60Hz, 1ph (1.5 Amp Maximum)
230VAC/50/60Hz, 1ph (0.7 Amp Maximum)
220VAC/50/60Hz, 1ph (1.0 Amp Maximum)
240VAC/50/60Hz, 1ph (1.0 Amp Maximum)

Power Cord Options:
115V50/60Hz = NEMA 5/15 (USA)
230V50/60Hz = NEMA 6/15 (USA)
220V50/60Hz = CEE 7/VII (EU)
240V50/60Hz = AS 3112 (Australia/New Zealand)

Motor:
Brushed DC, 1/8 H.P.

Duty Cycle:
Continuous

Motor Speed Adjustment Range 100:1:
1.0% - 100% motor speed (1.3 to 130 RPM)

Enclosure:
NEMA 4X (IP66), Polyester powder coated aluminum.

Maximum Overall Dimensions:
7-1/2" W x 10-1/4" H x 14" D (19 W x 26 H x 35.6 D cm)

Product Weight:
28.4 lb. (12.9 Kg)

Approximate Shipping Weight:
35 lb. (15.9 Kg)

2.1 Materials of Construction

Wetted Components:

Pump Tube Assembly:
Tubing:.....Flex-A-Prene®
Adapter Fittings: PVDF

NOTE: This is model specific, and two are provided.

Injection / Back-Flow Check Valve:
Body & insert: .....PVDF
Check Ball: .....Ceramic
Spring: .....Hastelloy C-276
Ball Seat O-Ring:.....FKM (optional EPDM)
Static Seal O-Ring:.....FKM (optional EPDM)

Ancillary Items Provided:
Suction Tubing:.....3/8" OD x 1/4" ID x 10' Clear PVC

Discharge Tubing: .....3/8" OD x 1/4" ID x 10' Polyethylene (LLDPE)
Suction Strainer: .....PVDF

Suction Strainer:
Body:.....PVDF
Check Ball: .....Ceramic
Ball Seat O-Ring:.....TFE/P (Optional EPDM)

With "M" Tubing M/NPT Connections Only:
Suction Strainer:
Body:.....PVDF
Check Ball: .....Ceramic
Ball Seat O-Ring:.....TFE/P (Optional EPDM)

Non-Wetted Components:

Enclosure:
413 Aluminum (Polyester powder coated)

Pump Head:
Valox® (PBT) thermoplastic

Pump Head Cover:
Polycarbonate for added strength and chemical resistance. Permanently lubricated sealed motor shaft support ball bearing.

Cover Screws:
Stainless steel

Roller Assembly:
Rotor:.....Valox® (PBT)
Rollers: .....PVDF
Roller Bearings: .....SS Ball Bearings

Motor Shaft:
Chrome plated steel

TFD System Sensor Pins:
Hastelloy C-276

Power Cord:
3 conductor, SJTW-A water-resistant

Tube Installation Tool:
GF nylon

Mounting Brackets and Hardware:
316 stainless steel

3.0 Features

- Peristaltic pump design does not have valves that can clog requiring maintenance.
- Self priming - even against maximum line pressure. By-pass valves are not required. Cannot vapor lock or lose prime.
- Variable speed DC motor.
- Rated for continuous duty (24X7).
- Specially engineered tubing for long life at high pressures. Meets FDA 21 CFR requirements for food contact applications.
- Patented Tube Failure Detection (TFD) system. Senses tube failure by detecting chemical in pump head.
- Molded squeeze rollers and molded alignment rollers for optimum squeeze, unparalleled accuracy, and tube life.
- Heavy duty rotor - single piece plastic rotor means no flexing and increased accuracy with no metal springs or hinges to corrode.
- Inject at maximum pressure in either direction (clockwise and counter clockwise).
- Compatible with Blue-White's output Flow Verification Sensor (FVS) system.

3.1 Agency Listings

This pump is ETL listed to conforms to the following: UL Standard 1081 as a motor operated water pump. CSA Standard C22.2 as process control equipment

This pump complies to the Machinery Directive 2006/42/EC, Low Voltage Directive 2014/35/EU, EN 60335-2-41, EMC Directive 2014/30/EU & EN 55014-1, EN 55014-2.

This pump is certified to NSF/ANSI Standard 50 - Equipment for Swimming Pools, Spas, Hot Tubs, and Other Recreational Water Facilities.

Symbol	Explanation
	WARNING (Risk of electric shock)
	CAUTION (Refer to the users' guide)
	GROUND, PROTECTIVE CONDUCTOR TERMINAL

Enclosure Rating:

NEMA 4X: Constructed for either indoor or outdoor use to provide a degree of protection to personnel against incidental contact with enclosed equipment; to provide a degree of protection against falling dirt, rain, sleet, snow, windblown dust, splashing water, and hose-directed water; and that will be undamaged by external formation of ice on enclosure.

IP66: No ingress of dust; complete protection against contact. Water projected in powerful jets against enclosure from any direction shall have no harmful effects.

4.0 Installation

CAUTION ⚠	Risk of chemical overdose. Be certain pump does not overdose chemical during backwash and periods of no flow in circulation system.
CAUTION ⚠	Always wear protective clothing, face shield, safety glasses and gloves when working on or near your metering pump. Additional precautions should be taken depending on solution being pumped. Refer to MSDS precautions from your solution supplier.
CAUTION ⚠	All diagrams are strictly for guideline purposes only. Always consult an expert before installing metering pump on specialized systems. Metering pump should be serviced by qualified persons only.
CAUTION ⚠	Be sure that installation does not constitute a cross connection with drinking water supply. Check your local plumbing codes.

4.1 Mounting Location

1. Choose an area located near the chemical supply tank, chemical injection point, and electrical supply. Also, choose an area where the pump can be easily serviced.

2. Finding a secure surface and using the provided 316SS mounting bracket, mount the pump close to the injection point. Keep the inlet (suction) and outlet (discharge) tubing as short as possible.

NOTE: Mounting the pump lower than the chemical container will gravity-feed chemical into it. This “flooded suction” installation will reduce output error due to increased suction lift. A shut-off valve, pinch-clamp, or other means to halt gravity-feed to the pump must be installed during servicing.

NOTE: Install a back flow prevention check valve at the discharge side of the pump to prevent the system fluid from flowing back through pump during tube replacement or during tube rupture.

NOTE: It is recommended to have a pressure relief valve at the discharge side of the of pump to prevent premature wear and damage to the pump tube, in the event that the discharge line becomes blocked.

NOTE: The FlexFlo® peristaltic metering pump does not require back pressure. Keep the discharge pressure as low as possible to maximize the tube life.

4.2 Dimensions

A2P Dimensions

Dim	Inches	cm
A	10-1/4”	26
B	7-1/2”	19
C	14”	35.6
D	9-1/2”	24.1
E	11”	27.9
F	3-3/8”	8.6
G	1-1/4”	3.2
H	2-1/2”	6.4
I	4-7/8”	12.3
J	7-1/4”	18.5
K	7-3/4”	19.7

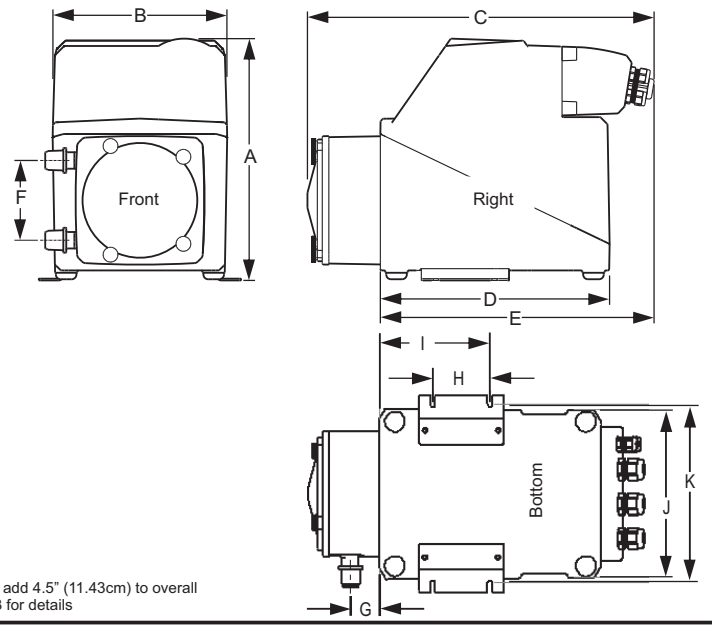

Note: Optional Extended Bracket add 4.5” (11.43cm) to overall height (dimension A). See page 3 for details

4.3 Installing Injection Fitting and Strainer

⚠ CAUTION Proper eye and skin protection must be worn when installing and servicing pump.

⚠ CAUTION **This pump has been evaluated for use with water only**. Also, this pump has been tested by NSF International for use with 12-1/2% sodium hypochlorite only.

Injection Fitting and Strainer for 1/4" (.64 cm) I.D. Connection End Models

Discharge Injection Fitting / Check Valve

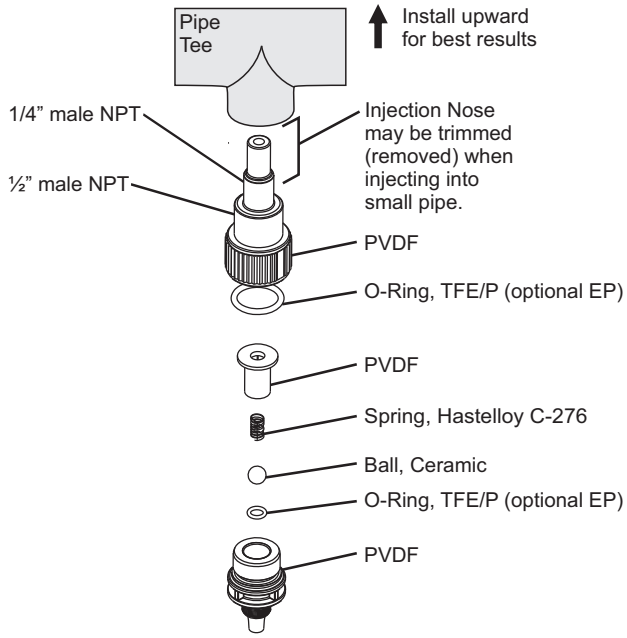

Suction Tubing and Strainer

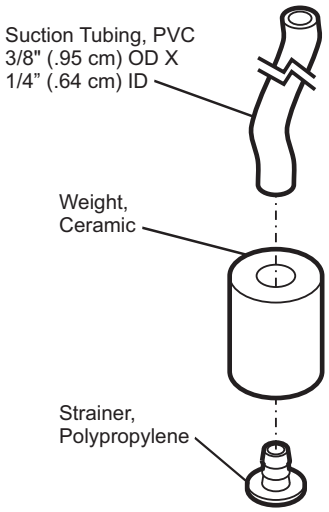

5.0 Power Connections

WARNING Risk of electric shock – cord connected models are supplied with a grounding conductor and grounding-type attachment plug. To reduce risk of electric shock, be certain that it is connected only to a properly grounded, grounding-type receptacle.

WARNING Electrical connections and grounding (earthing) must conform to local wiring codes. Be certain that a grounding conductor is connected to terminal T11-1 located in wiring compartment.

WARNING Risk of electric shock - Disconnect electricity before removing wiring compartment cover.

- Be certain to connect pump to proper supply voltage. Using incorrect voltage will damage pump and may result in injury. Voltage requirement is printed on pump serial label.
- Input power: 115VAC 50/60 Hz 1.5 amp or 230/240VAC 50/60 Hz 0.7 amp.
- Power switch located in Junction Box.
- Use voltage your power cord is rated for.
- Cord connected models are supplied with a ground wire conductor and a grounding type attachment plug (power cord). To reduce risk of electric shock, be certain that power cord is connected only to a properly grounded, grounding type receptacle.
- Permanently connected models must be properly grounded. Be certain that a grounding conductor is connected to terminal T11-1 located in wiring compartment.
- Never strap control (input / output) cables and power cables together.

NOTE: This pump has an auto-restart feature which will restore pump to operating state it was in when power was lost.

NOTE: When in doubt regarding your electrical installation, contact a licensed electrician.

WIRING COMPARTMENT COVER

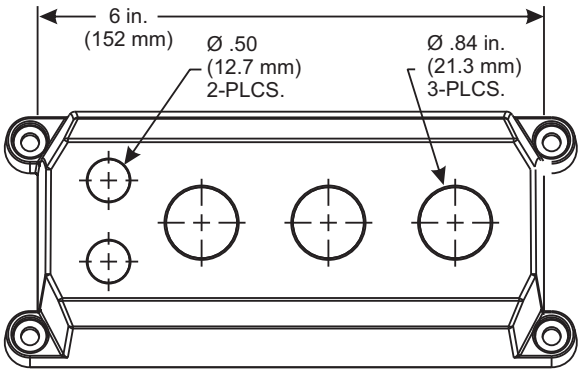

POWER CORD OPTIONS

Three power cord plug types available.
Power cord length is 6 feet (3.83 meters)

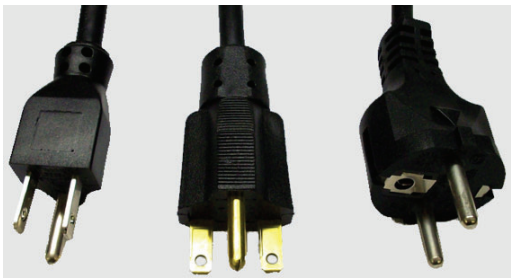

115V 50/60Hz NEMA 5/15 (USA) max: 125V AC

230V 50/60Hz NEMA 6/15 (USA) max: 250V AC

240V 50/60Hz CEE 7/VII (EU) max: 250V AC

Included cable and conduit connectors:

QTY.	DESCRIPTION
Qty: 2	.50 Inch (12.7 Mm) Liq-tight Hole Plugs (mat'l = Neoprene), Pre-installed
Qty: 3	.875 Inch (22.2 Mm) Liq-tight Hole Plugs (mat'l = Neoprene), 2 Pre-installed
Qty: 2	.50 Inch (12.7 Mm) Liq-tight Connectors For Pass Thru Cords (mat'l = Nylon) Acceptable Cable Diameter .12 To .26 Inch (3.0 To 6.5 Mm), Not Installed
Qty: 3	.875 Inch (22.2 Mm) Liq-tight Connectors For Pass Thru Cords (mat'l = Nylon) Acceptable Cable Diameter .20 To .40 Inch (5.1 To =10.0 Mm), 1 Pre-installed W/ Power Cord Models
Qty: 2	Metallic Liq-tight Connectors For .50 Inch Flexible Conduit (mat'l = Die Cast Zinc), Not Installed

5.1 Wiring Terminals and I/O Schematics

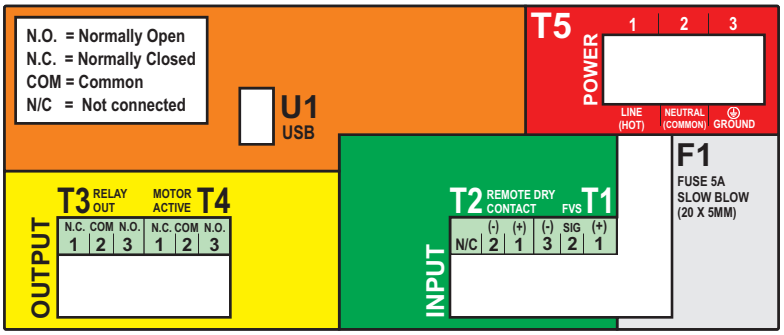

WARNING Risk of electric shock - All wiring must be insulated and rated 300V minimum.

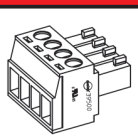

Terminals T1 Thru T8
Plug type
16 - 24 AWG

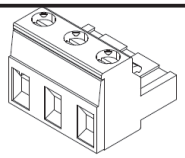

Power Input Terminal T11
Plug type
14 - 30 AWG

Shielded cables should be used on all input signal wires.

FUNCTION	TERM	PIN #	RATING	ELECTRICAL SP.	BLOCK DIAGRAM
INPUT: FVS SYSTEM (FLOW VERIFICATION SENSOR) FV SENSOR ONLY	T1	1	(+) POSITIVE		BLUE-WHITE FVS SENSOR — BLACK (-) / BARE / RED (+) → T1 FVS (-) SIG (+) 3 2 1
	T1	2	SIGNAL		
	T1	3	(-) NEGATIVE		
INPUT: REMOTE START / STOP (DRY CONTACT C.)	T2	1	(+) POSITIVE	NO VOLTAGE	OPEN CIRCUIT IMPEDANCE MUST BE GREATER THAN 50K OHM — (-) / (+) → T2 REMOTE DRY CONTACT N/C (-) (+) 2 1
	T2	2	(-) NEGATIVE		
OUTPUT: RELAY, 3 AMP	T3	1	NORM. CLOSED	Form C 3 AMP MAX AT 250 VAC, 3 AMP MAX AT 30 VOLT DC	SWITCH LOAD 3 AMP MAX @ 250V AC 3 AMP MAX @ 30V DC — NC / C / NO → T3 RELAY OUT 3 2 1 N.O. COM N.C.
	T3	2	COMMON		
	T3	3	NORM. OPEN		
OUTPUT: CONTACT CLOSE MOTOR ACTIVE	T4	1	NORM. CLOSED	2 AMP MAX AT 250 VAC, 30 VDC	SWITCH LOAD 2 AMP MAX @ 250V AC 1 AMP MAX @ 30V DC — NC / C / NO → T4 MOTOR ACTIVE 3 2 1 N.O. COM N.C.
	T4	2	COMMON		
	T4	3	NORM. OPEN		
INPUT: POWER	T5	1	GROUND	96 - 240 VAC 50/60 HZ 180W	AC VOLTAGE → T5 LINE (HOT) NEUTRAL (COMMON) GROUND 3 2 1 POWER
	T5	2	NEUTRAL		
	T5	3	LINE (HOT)		
FUSE	F1	N/A	5 AMP	5A SLOW BLOW (20 X 5MM)	

6.0 How to Adjust the Output

Speed of the pumping mechanism is adjustable from 1% to 100%. With manual (MAN) selected, turn the adjustment knob to the desired percentage of speed.



7.0 Tube Failure Detection (TFD)

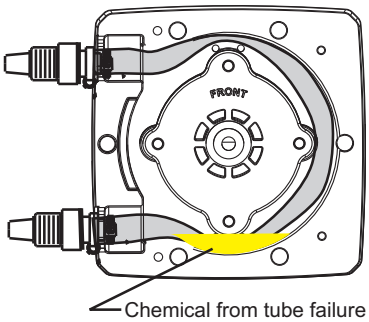

FlexFlo® is equipped with a Tube Failure Detection (TFD) system, which is designed to stop pump and provide an output alarm in event pump tube should rupture and chemical enters pump head. Pump will detect a chemical with a conductivity reading greater than 500 microsiemens. Chemicals with a conductivity of less than 500 microsiemens will not be detected.

This patented system is capable of detecting presence of a large number of chemicals including sodium hypochlorite (chlorine), hydrochloric (muriatic) acid, sodium hydroxide, and many others. The system will not be triggered by water (rain, condensation, etc.) or silicone oil (roller lubricant).

NOTE: If the system has detected a chemical, the pump tube must be replaced, and the pump head and roller assembly must be thoroughly cleaned. Failure to clean the roller assembly will void the warranty.

NOTE: If the TFD alarm is triggered, the pump will stop, and close an alarm output.

Confirming Chemical Detection

To determine if the chemical used will be detected by the system, remove the pump head cover, and the pump tube and roller assembly.

Place a small amount of chemical in the bottom of the pump head - enough to cover the sensors. Replace the pump head cover only.

Turn on the pump (press the “START” button). If the TFD system detects a chemical, the pump will stop after a two-second confirmation period. If the TFD system does not detect a chemical, the pump will continue to run after the confirmation period.

Carefully clean the chemicals out of the pump head, ensuring to remove all traces of chemicals from the sensor probes. Replace the roller assembly and tubing. Replace the pump head cover. Press the “START” button to clear the alarm condition, and then restart the pump.

8.0 Alarm Relay

The pump has a built-in 3 amp alarm output relay. Relay is pre-configured to energize on tube failure detection (TFD).

A Flow Verification Sensor (FVS) must be installed and configured for relay to trigger on no-flow conditions.

9.0 Tube Replacement

CAUTION ⚠	Prior to service, pump clean water through pump and suction / discharge line to remove chemical.
CAUTION ⚠	Always wear protective clothing, face shield, safety glasses and gloves when working on or near your metering pump. Additional precautions should be taken depending on solution being pumped. Refer to MSDS precautions from your solution supplier.
CAUTION ⚠	Use provided Tube Installation Tool to leverage tubing into pump head. **Do not use your fingers.**
CAUTION ⚠	Use extreme caution when replacing pump tube. **Do not place your fingers near the rollers**.

9.1 Tube Removal

Step 1

All service work should be performed by qualified personnel only.

If the pump head cover is removed while the unit is running, the pump motor will stop.

SAFETY FIRST, REMOVE PRESSURE. Relieve (remove) system pressure on discharge and suction side of the pump. Failure to do so will cause the solution to squirt when disconnecting the tube connections.

CAUTION ⚠

Disconnect the system plumbing from the pump tube adapters.

Step 2

Place the switch in the OFF position.

Using the provided tool, remove the four black thumb screws from the front of the pump head cover. Turn the screws counterclockwise to remove.

Remove the pump head cover by pulling it straight out.

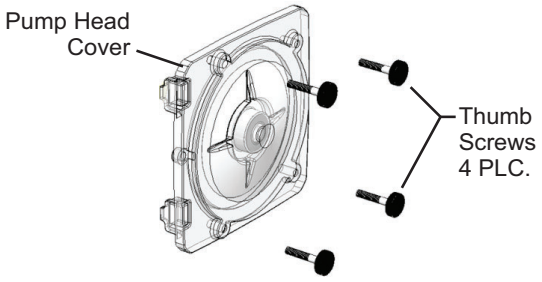

Step 3

With the pump stopped, securely grab hold of the suction side tube adapter.

CAUTION: Keep your fingers away from the rollers and rotor.

Place the switch in the Manual (MAN) position to allow rotation of rotor.

Rotor will rotate at a maximum of 6 RPM for your safety.

Gently pull the suction side tube adapter out, away from pump.

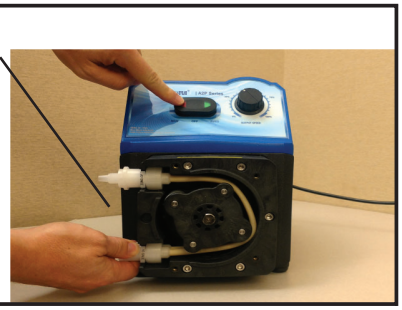

Step 4

Continue to pull the suction side adapter out of the pump head while rotor is in rotation.

Place the switch in the OFF position.

Carefully pull the discharge side of tube adapter out of the pump head.

Properly dispose the used tubing.

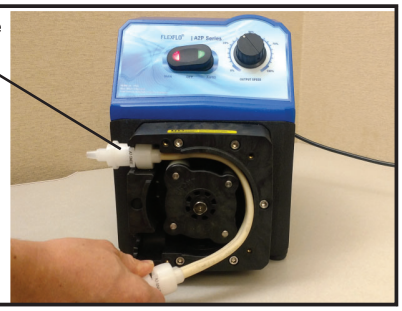

9.2 Tube Installation

NOTE: Thoroughly clean the pump head and rotor. Rotor can be removed by pulling straight out. After the cleaning process, push the rotor back on the shaft. Refer to the drawing below for proper assembly.

NOTE: For the rotor direction, the word, “FRONT,” on the rotor must face forward (front of the pump).

Step 1

Ensure the pump is stopped.

With the pump stopped, press the suction side of tube adapter securely into the pump head.

Clip tube installation tool to discharge side of tube adapter.

NOTE: Always keep fingers away from the rollers and rotor.

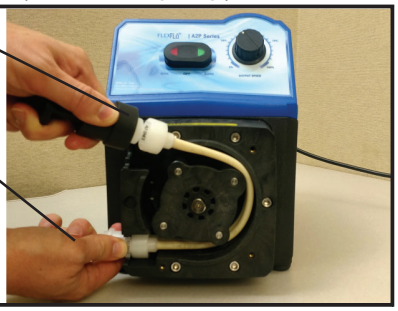

Step 2

NOTE: Your hand should only come in contact with the installation tool.

Place the switch in the Manual (MAN) position.

Use the installation tool to leverage the tubing into the pump head while the rotor is rotating.

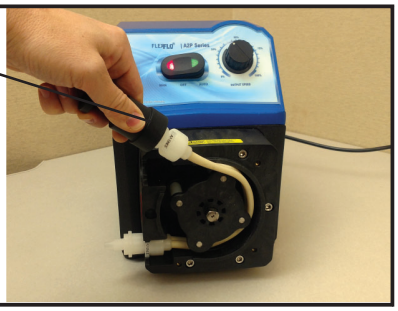

Step 3

Continue to hold onto the installation tool

Allow rotor to rotate a few times. This will stretch tubing out.

After a few rotations, pull the installation tool and tubing in the direction of rotation.

Press the discharge side of tube adapter securely into the pump head.

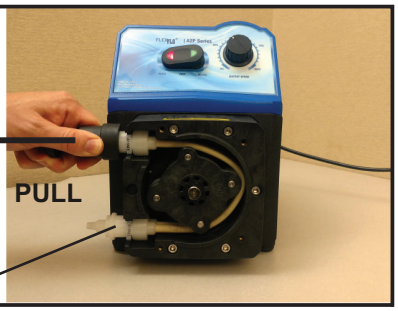

Step 4

Place the switch in the OFF position.

The suction and discharge tube adapter ends should be securely held in place on the pump head as illustrated in photo.

Secure the pump head cover to the pump head using the four black thumb screws (maximum torque 6-8 in. lbs.).

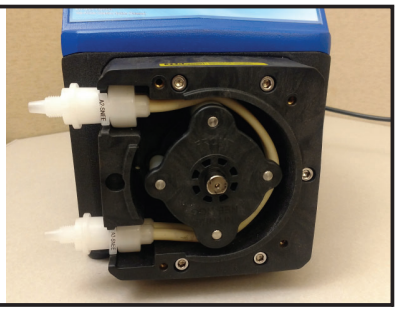



Tube Installation Tool
90002-278



Allen Wrench
90008-162

10.0 Pump Maintenance

CAUTION ⚠	Always wear protective clothing, face shield, safety glasses and gloves when working on or near your metering pump. Additional precautions should be taken depending on solution being pumped. Refer to MSDS precautions from your solution supplier.

Routine Inspection and Maintenance

The pump requires minimal maintenance. However, the pump and all the accessories should be checked weekly, especially when pumping chemicals. Inspect all the components for signs of leaking, swelling, cracking, discoloration, or corrosion. Immediately replace worn out or damaged components.

Cracking, crazing, or discoloration during the first week of operation are signs of a severe chemical attack. If this occurs, perform the following steps:

1. Immediately remove the chemical from the pump.
2. Determine which parts are being attacked.
3. Replace the damaged parts with parts that have been manufactured using more suitable materials.
4. After servicing, operate the pump to verify normal operation.

NOTE: The manufacturer does not assume responsibility for damage to a pump that has been caused by a chemical attack.

How to Clean and Lubricate the Pump

- The pump will require occasional cleaning, and it will depend on the severity of service.
- When changing the pump tube assembly, the pump head chamber, the roller assembly, and the pump head cover should be wiped of any dirt and debris.
- Clean the motor shaft with a clean towel, and then apply a small amount of grease to the shaft. This will help prevent the rotor from sticking to the motor shaft.
- Periodically, or when necessary, grease the pump head cover bearing. Apply a small amount of grease (Aeroshell aviation grease #5 or equivalent).
- 100% silicone lubrication may be used on the roller assembly.
- Periodically clean the injection fitting /check valve assembly, especially since injecting fluids, like sodium hypochlorite, can calcify. These lime deposits and other buildups can clog the fitting, increase back pressure, and interfere with the check valve operation.
- Periodically clean the suction strainer.

THIS PAGE IS INTENTIONALLY LEFT BLANK

A2P Replacement Parts List

Peristaltic Metering Pump

Flex-A-Prene®

Tubing in this group are interchangeable with single roller assembly (rotor).

Item	Description	Part Number	QTY
1	Spacer, Back	90011-217	1
2	Roller Assembly Complete (Rotor), For NEE and NGG Tubes	A2-SNGG-R	1
3	Tube Assembly, 3/8" OD Tube Compression, Flex-A-Prene NGG (.187 ID)	A2P-SNGG-T	1
3	Tube Assembly, 3/8" OD Tube Compression, Flex-A-Prene NEE (0.093 ID)	A2P-SNEE-T	1
4	Pump Head Cover, Polycarbonate - New design, backwards compatible	A2-SXX-C	1
5	Thumb Screw w/ 5/8" Key Drive, max torque 6-8 in. lbs (4 required per pump, sold individually)	90011-237	1
6	Tube Nut, Compression, For 3/8" Tubing (2 required per pump, sold individually)	C-330-6	1

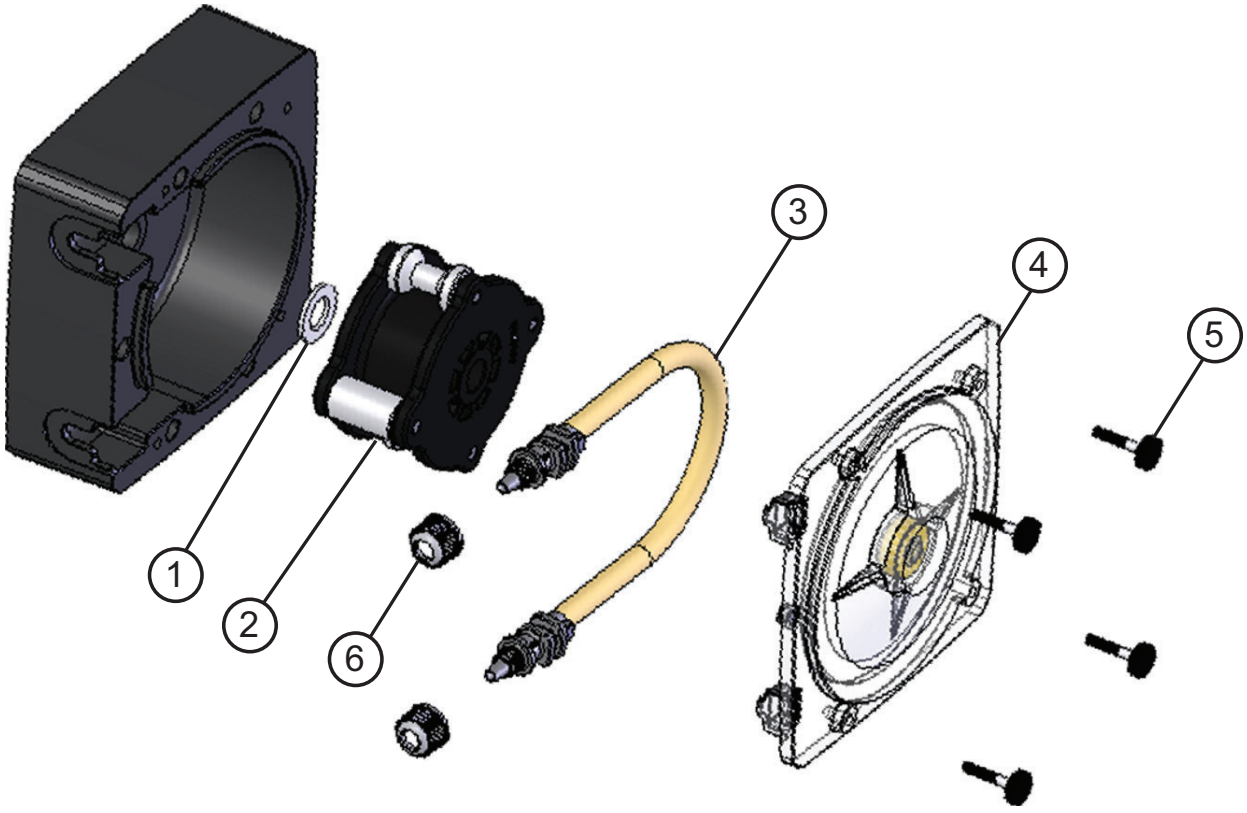

LIMITED WARRANTY

Your new FlexFlo® pump is a quality product and is warranted for 24 months from date of purchase (proof of purchase is required). The pump will be repaired or replaced at our discretion. Pump Head and roller assembly is warrantied against damage from chemical attack when proper Tube Failure Detection (TFD) system instructions and maintenance procedures are followed.

WHAT IS NOT COVERED

- **Pump Tube Assemblies and rubber components – They are perishable and require periodic replacement.**
- **Pump removal, or re-installation, and any related labor charge.**
- **Freight to the factory, or ProSeries service center.**
- **Pumps that have been tampered with, or in pieces.**
- **Damage to the pump that results from misuse, carelessness such as chemical spills on the enclosure, abuse, lack of maintenance, or alteration which is out of our control.**
- **Pumps damaged by faulty wiring, power surges or acts of nature.**

Blue-White Industries, Ltd. does not assume responsibility for any loss, damage, or expense directly or indirectly related to or arising out of the use of its products. Failure must have occurred due to defect in material or workmanship and not as a result of operation of the product other than in normal operation as defined in the pump manual.

Warranty status is determined by the pump's serial label and the sales invoice or receipt. The serial label must be on the pump and legible. The warranty status of the pump will be verified by Blue-White Industries, Ltd. or a factory authorized service center.

OTHER IMPORTANT WARRANTY INFORMATION

Be advised that injection and metering devices are not intended as a means of treating water to render it suitable for human consumption. When used as hypochlorinators, they are meant to destroy bacteria and algae contamination, before its removal by filtration. Acid and soda injectors are used for PH control (balance). Blue-White Industries. Ltd. injectors are factory tested with water only for pressure and performance. Installers and operators of these devices must be well informed and aware of the precautions to be taken when injecting various chemicals, especially those considered hazardous or dangerous, eye protection must be worn when working around this product or any other metering type of pump.

Should it become necessary to return the pump for repair or service, you must attach information regarding the chemical used as some residue may be present within the unit which could be a hazard to service personnel.

Blue-White Industries, Ltd. will not be liable for any damage that may result by the use of chemicals with their injectors and its components.

PROCEDURE FOR IN-WARRANTY REPAIR

Contact the factory to obtain a RMA (Return Material Authorization) number. Carefully pack the pump to be repaired. It is recommended to include the foot strainer and injection/check valve fitting since these devices may be clogged and part of the problem. Enclose a brief description of the problem as well as the original invoice or sales receipt, or copy showing the date of purchase. Prepay all shipping costs. **COD shipments will not be accepted**. Warranty service must be performed by the factory or an authorized service center. Damage caused by improper packaging is the responsibility of the sender. When in-warranty repair or replacement is completed, the factory pays for return shipping to the dealer or customer.



Users of electrical and electronic equipment (EEE) with the WEEE marking per Annex IV of the WEEE Directive must not dispose of end of life EEE as unsorted municipal waste, but use the collection framework available to them for the return, recycle, recovery of WEEE and minimize any potential effects of EEE on the environment and human health due to the presence of hazardous substances. The WEEE marking applies only to countries within the European Union (EU) and Norway. Appliances are labeled in accordance with European Directive 2002/96/EC.

Contact your local waste recovery agency for a *Designated Collection Facility* in your area.

Blue-White
Industries, Ltd.

5300 Business Drive, Huntington Beach, CA 92649, USA
Phone: 714-893-8529 **FAX:** 714-894-9492
E mail: sales@blue-white.com **or** techsupport@blue-white.com **URL:** www.Blue-White.com

P.N. 80000-588 Rev. 10 20200213