FLEXFLO®

Peristaltic Metering Pump



CE ETL US NSF Certified to NSF/ANSI Standard 50

NEMA 4X

Exclusive:
TFD system
Tube Failure Detection
Patented

SERIES A1A

Operating Manual

Protected by Patents: 8,418,364; 8,215,931;
7,001,153; 7,284,964; 4,496,295
and other patents pending

5300 Business Drive, Huntington Beach, CA 92649, USA
Phone: 714-893-8529 **FAX:** 714-894-9492
E mail: sales@blue-white.com | techsupport@blue-white.com **URL:** www.Blue-White.com

TABLE OF CONTENTS

1.0 INTRODUCTION 4
1.1 Available Models 4

2.0 ENGINEERING SPECIFICATIONS 5

3.0 CONSTRUCTION MATERIALS 6
3.1 Wetted Components 6
3.2 Non-Wetted Components 6

4.0 FEATURES 7
4.1 Agency Listings 7

5.0 INSTALLATION 8
5.1 Mounting Location 8
5.2 Wall Mounting 9
5.3 Installing Injection Fitting and Strainer 10

6.0 POWER CONNECTIONS 11

7.0 TOUCHPAD LAYOUT 12
7.1 IO Connection 12
7.2 Operation Mode 13

8.0 OUTPUT ADJUSTMENT 14

9.0 TUBE FAILURE DETECTION (TFD) 15
9.1 Confirming Chemical Detection 15

10.0 PUMP MAINTENANCE 16
10.1 Routine Inspection and Maintenance 16
10.2 Cleaning and Lubricating the Pump 16

11.0 TUBE REPLACEMENT 19
11.1 Provided Tool 19
11.2 Tube Removal 19
11.3 Tube Installation 21

12.0 PUMP HEAD REPLACEMENT PARTS LIST 23

13.0 WARRANTY 24
13.1 Limited Warranty 24
13.2 What is not Covered 24
13.3 Other Important Warranty Information 24
13.4 Obtaining In-Warranty Repair 24

APPENDIX A: ACRONYMS 26

APPENDIX B: MODEL NUMBER MATRIX 28

READ THE INSTRUCTION MANUAL PRIOR TO INSTALLATION AND USE.

1.0 INTRODUCTION

Congratulations on purchasing Blue-White Industries, Ltd.'s FlexFlo® Series A1A variable speed, peristaltic metering pump (a peristaltic metering pump is a type of positive displacement pump used for pumping a variety of fluids).

The FlexFlo® Series A1A variable speed, peristaltic metering pump is pre-configured for the tubing that is shipped with it.

NOTE: It is recommended that the pump have a one-hour break-in period before calibrating the new tube.

NOTE: The tubing has an identification number printed on the tube for easy re-ordering.

NOTE: The pump was pressure-tested at the factory with clean water before it was shipped, so there may be trace amounts of clean water in the pre-installed tube assembly. This is part of Blue-White Industries, Ltd.'s stringent quality assurance process.

1.1 Available Models

Flex-A-Prene® A1A Tube Pumps [1]

Feed Rate [2]		Maximum Pressure PSI (bar) [3]	Maximum Temperature °F (°C) [3]	A1A Model Numbers		
GPD	LPH			115V AC [4]	230V AC [5]	220V AC [5]
0.01-100	0.01-15.8	40 (2.76)	185 (85)	A1A4-7T	A1A5-7T	A1A6-7T

NOTES:

1 - For optimum tube life, specify the pump to operate at the lowest possible feed rate and pressure.
2 - Meets FDA criteria for food
3 - Excellent chemical resistance
4 - Clean-in-place (CIP)
5 - Steam-in-place (SIP)

2.0 ENGINEERING SPECIFICATIONS

Maximum Working Pressure (Excluding pump tubes)[1]	40 PSI (2.76 bar)
Maximum Suction Lift	30 ft. of water at sea level (14.7 atm psi)
Ambient Operating Temperature	14°F to 125°F (-10°C to 52°C)
Ambient Storage Temperature	-40°F to 158°F (-40°C to 70°C)
Operating Voltage	115V60Hz 1 PH (0.6A max.) 220V50Hz 1 PH (0.3A max.) 230V60Hz 1 PH (0.3A max.) 230V50Hz 1 PH (0.3A max.) 240V50Hz 1 PH (0.3A max.)
Power Cord Options	115V50/60Hz = NEMA 5/15 (USA) 230V50/60Hz = NEMA 6/15 (USA) 220V50/60Hz = CEE 7/VII (EU) 240V50/60Hz = AS 3112 (Australia/New Zealand)
Motor	Brushless DC, 50W.
Duty Cycle	Continuous
Flow Range Adjustment	0.01 - 100 GPD (0.01 - 15.8 LPH)
Enclosure	NEMA 4X (IP66), Valox® (PBT) & PA12
Maximum Overall Dimensions	7.25” W x 9” H x 10” D (18.5 W x 22.9 H x 25.2 D cm)
Product Weight	6 lb. (2.7 Kg)
Approximate Shipping Weight	13 lb. (5.9 Kg)
Approximate Shipping Dimensions	10.5” W x 13.75” H x 11” D (26.7 W x 35 H x 28 D cm)

NOTE

1 - Refer to the individual pump tube assembly maximum pressure rating.

3.0 CONSTRUCTION MATERIALS

3.1 Wetted Components

Pump Tube Assembly	
Tubing	Flex-A-Prene®
Adapter Fittings	PVDF
Injection / Back-Flow Check Valve	
Body & Insert	Polypropylene (optional PVDF)
Check Ball	Ceramic
Spring	Hastelloy C-276
Ball Seat O-Ring	TFE/P
Static Seal O-Ring	FKM
Ancillary Items Provided	
Suction Tubing	3/8” OD x 1/4” ID x 10’ Clear PVC
Discharge Tubing	3/8” OD x 1/4” ID x 10’ Polyethylene (LLDPE)
Suction Strainer	Polypropyle

3.2 Non-Wetted Components

Enclosure	Valox® (PBT) & PA12 thermoplastic
Pump Head	Valox® (PBT) thermoplastic
Pump Head Cover	Polycarbonate for added strength and chemical resistance. Permanently lubricated sealed motor shaft support ball bearing.
Cover Screws	Stainless steel, polypropylene cap
Roller Assembly	
Rotor	Valox® (PBT)
Rollers	Nylon
Roller Bearings	Bronze
TFD System Sensor Pins	Hastelloy C-276
Power Cord	3 conductor, SJTW-A water-resistant
Tube Installation Tool	GF nylon
Mounting Brackets and Hardware	316 stainless steel screws GF nylon bracket

4.0 Features

- Designed with non-clogging valves.
- Self-priming (even against maximum line pressure), which means no required bypass valves, and it cannot vapor lock or lose prime.
- Output rates from .01 to 100 GPD (.01 to 15.8 LPH).
- Pressure up to 40 PSI (2.76 bar).
- Variable speed brushless DC motor.
- Exclusive Tube Failure Detection (TFD) system, which senses tube failure by detecting chemical in the pump head, shuts off the pump, and activates a 48 VDC @ 80 mA relay. No false triggering.
- Remote Start/Stop, which is non-powered dry contact closure.
- Three-nylon, molded squeeze rollers for optimum squeeze, high accuracy, and long tube life.
- Heavy duty rotor that has a single piece, plastic rotor for no flexing, and high accuracy with no corroding metal springs or hinges.
- Chemical-resistant tubing capable of pumping bleach (sodium hypochlorite), calcium hypochlorite 20%, and muriatic acid (hydrochloric acid).
- Rated for continuous duty.

4.1 Agency Listings

This pump is ETL listed to conforms to the following: UL Standard 1081 as a motor operated water pump. CSA Standard C22.2 as process control equipment

This pump complies to the Machinery Directive 2006/42/EC, Low Voltage Directive 2014/35/EU, EN 60335-2-41, EMC Directive 2014/30/EU & EN 55014-1, EN 55014-2.

This pump is certified to NSF/ANSI Standard 50 - Equipment for Swimming Pools, Spas, Hot Tubs, and Other Recreational Water Facilities

Symbol	Description
	Warning (Risk of electric shock)
	Caution (Refer to the user's guide)
	Ground, Protective Conductor Terminal

ENCLOSURE RATING

NEMA 4X Constructed for either indoor or outdoor use to provide a degree of protection to personnel against incidental contact with enclosed equipment; to provide a degree of protection against falling dirt, rain, sleet, snow, windblown dust, splashing water, and hose-directed water; and that will be undamaged by external formation of ice on enclosure.

IP66 No ingress of dust; complete protection against contact. Water projected in powerful jets against enclosure from any direction shall have no harmful effects.

5.0 INSTALLATION

CAUTION

The pump should be serviced by qualified persons only. If equipment is used in a manner not specified in this manual, the protection provided by the equipment may be impaired.

CAUTION

Risk of chemical overdose. Be certain pump does not overdose chemical during backwash and periods of no flow in circulation system.

CAUTION

Always wear protective clothing, face shield, safety glasses and gloves when working on or near your metering pump. Additional precautions should be taken depending on solution being pumped. Refer to MSDS precautions from your solution supplier.

CAUTION

All diagrams are strictly for guideline purposes only. Always consult an expert before installing metering pump on specialized systems. Metering pump should be serviced by qualified persons only.

CAUTION

Be sure that installation does not constitute a cross connection with drinking water supply. Check your local plumbing codes.

CAUTION

The pump should be supplied by an isolating transformer or RCD (operating current less or equal 30 mA).

5.1 Mounting Location

1. Choose an area located near the chemical supply tank, chemical injection point, and electrical supply. Also, choose an area where the pump can be easily serviced.

2. Finding a secure surface and using the provided mounting hardware, mount the pump close to the injection point. Keep the inlet (suction) and outlet (discharge) tubing as short as possible. Longer discharge tubing increases back pressure at pump head.

NOTE: Mounting the pump lower than the chemical container will gravity-feed chemical into it. This “flooded suction” installation will reduce output error due to increased suction lift. A shut-off valve, pinch-clamp, or other means to halt gravity-feed to the pump must be installed during servicing.

NOTE: Install a back flow prevention check valve at the discharge side of the pump to prevent the system fluid from flowing back through pump during tube replacement or during tube rupture.

NOTE: It is recommended to have a pressure relief valve at the discharge side of the of pump to prevent premature wear and damage to the pump tube, in the event that the discharge line becomes blocked.

NOTE: The pump does not require back pressure. Keep the discharge pressure as low as possible to maximize the tube life.

5.2 Wall Mounting

1. Using the provided #10 self-tapping screws, mount the bracket to a secure wall that is located where it can be easily serviced.

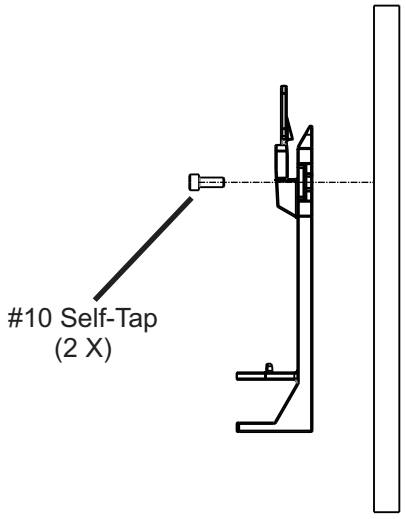

Wall Mount Bracket (Side View)

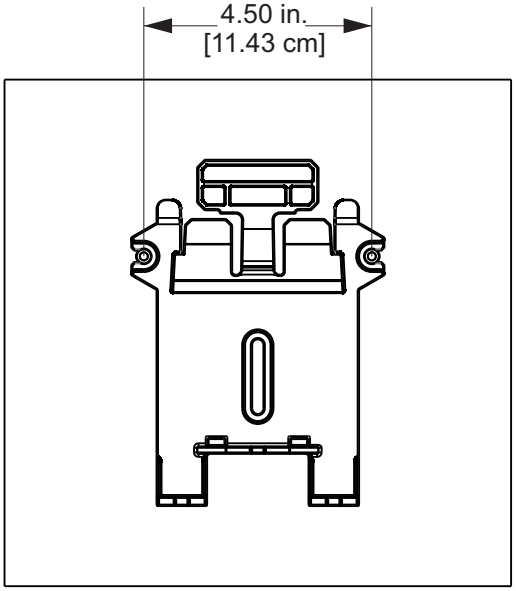

Mounted Pump (Front View)

2. Lower the pump so that the tab on the wall mount is inserted into the slot located on the back of the pump. The pump will now be secured to the wall mount bracket.

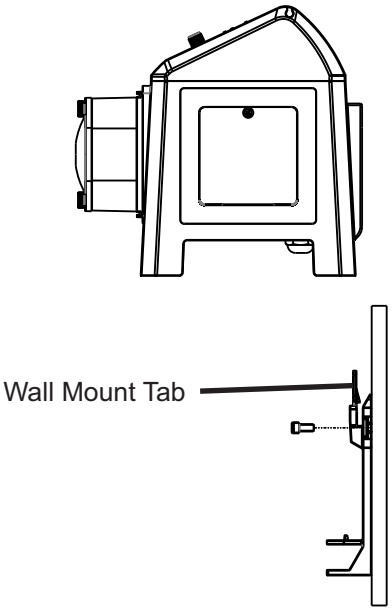

Wall Mount (Side View)

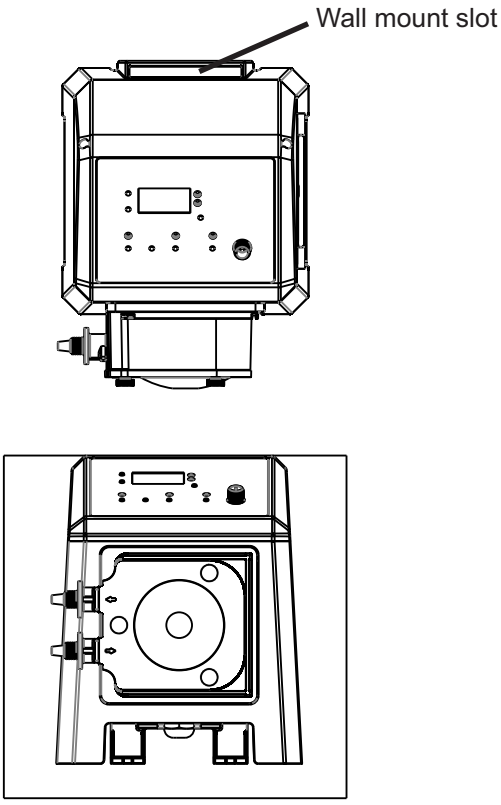

Mounted Pump

5.3 Installing Injection Fitting and Strainer

CAUTION

Proper eye and skin protection must be worn when installing and servicing pump.

Assemble the injection fitting and strainer per the figures below.

NOTE: Install upward for best results.

NOTE: The injection nose may be trimmed (removed) when injecting into a small pipe.

INJECTION FITTING AND STRAINER FOR 1/4” (0.64 CM) I.D. CONNECTION END MODELS

Discharge Injection Fitting / Check Valve	Suction Tubing and Strainer

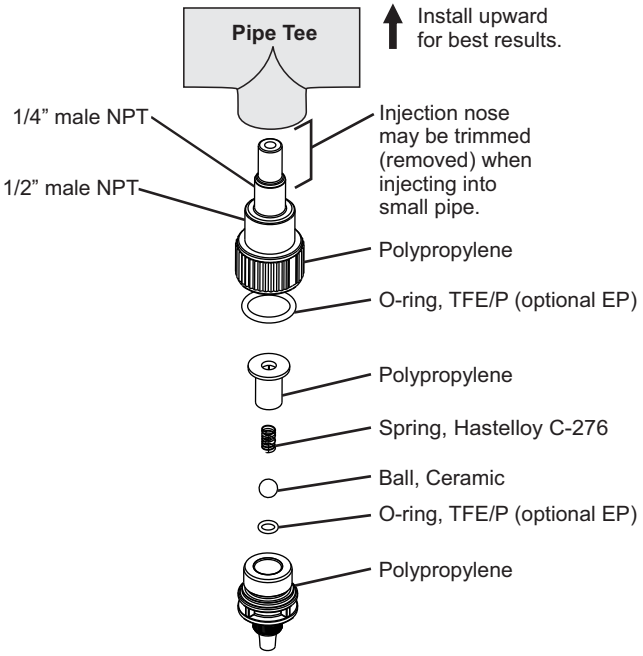

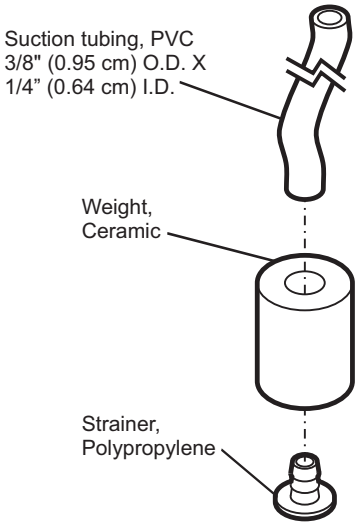

6.0 POWER CONNECTIONS



Risk of electric shock – cord connected models are supplied with a grounding conductor and grounding-type attachment plug. To reduce risk of electric shock, be certain that it is connected only to a properly grounded, grounding-type receptacle.



Electrical connections and grounding (earthing) must conform to local wiring codes. Be certain that a grounding conductor is connected to terminal T11-1 located in wiring compartment.



Risk of electric shock - Disconnect electricity before removing wiring compartment cover.



Ensure to connect the pump to the proper supply voltage. Using the incorrect voltage will damage the pump and may result in injury. The voltage requirements is printed on the pump serial label.

- Use the voltage for which the power cord is rated.
- Do not strap together control (input/output) cables and power cables.
- When there is a power interruption, the pump, which has an auto-restart feature, will restore the pump to the operating state it was in when the power was lost.
- POWER: 115V60Hz (0.6A max.), 220V50Hz (0.3A max.), 230V60Hz (0.3A max.), 230V50Hz (0.3A max.), 240V50Hz (0.3A max.)

NOTE: Contact a licensed electrician when there is doubt regarding the electrical installation.

7.0 TOUCHPAD LAYOUT

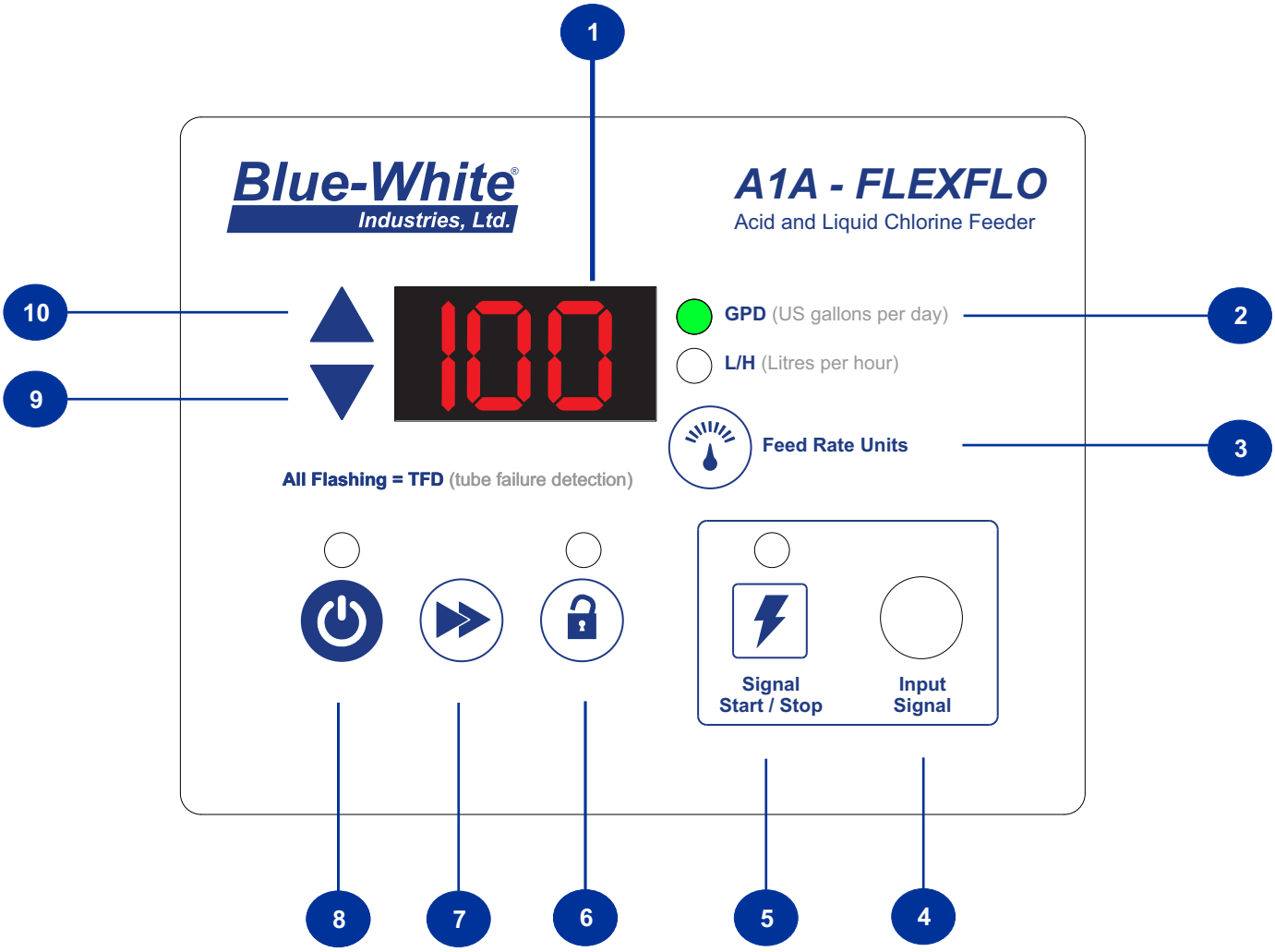

Item Number	Item
1	LED/LCD Readout
2	Unit of Measurement
3	Rate Display Key
4	M8 Input Key
5	Remote Start/Stop Key
6	Lock-Out Key
7	Prime Key
8	Start & Stop Key
9	Down Key
10	Up Key

7.1 IO Connection

WARNING

Risk of electric shock - All wiring must be insulated and rated 300V minimum.

4-Pin M8 Connector

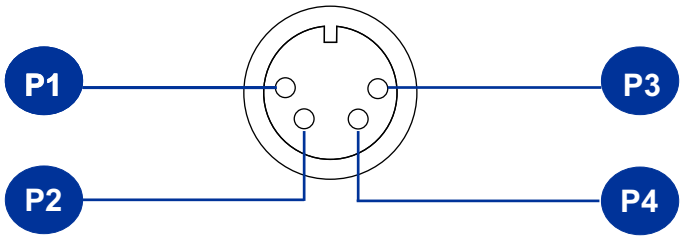

PIN	Function	Specifications
P1	Relay	48 VDC @ 80 mA MAX.
P2	Relay	48 VDC @ 80 mA MAX.
P3	Remote Start/Stop	N.O. dry contact closure
P4	Ground	DC ground

7.2 Operation Mode

Start & Stop Key LED	Signal Key LED	P3-P4	Status
Red	X	X	Stop
Green	Off	X	Stop
Green	Green	Close	Run
Green	Green	Open	Stop
Green	Red	Close	Stop
Green	Red	Open	Run

How to Change the Signal Key LED Color

To change the Signal Key LED color, press and hold the Signal Key button for 5 seconds.

8.0 OUTPUT ADJUSTMENT

Speed of pumping mechanism is adjustable from 0.01 GPD to 100 GPD (0.01 LPH to 15.8 LPH).

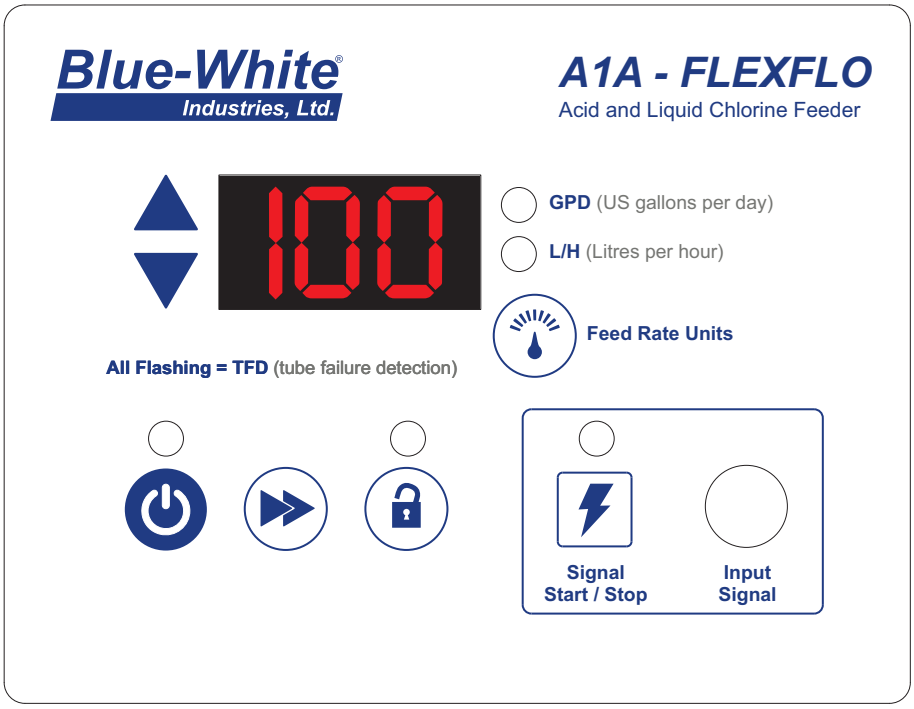

9.0 TUBE FAILURE DETECTION (TFD)

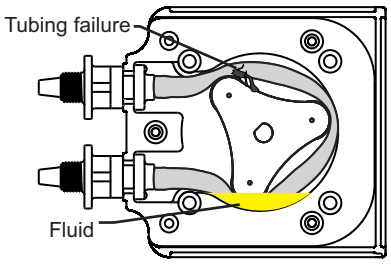

The pump is equipped with a Tube Failure Detection (TFD) system, which is designed to stop the pump and provide an output alarm in the event the pump tube should rupture, and a chemical enters the pump head. The pump will detect a chemical with a conductivity reading greater than 500 microsiemens. Chemicals with a conductivity of less than 500 microsiemens will not be detected.

This patented system can detect the presence of many chemicals, including sodium hypochlorite (chlorine), hydrochloric (muriatic) acid, sodium hydroxide, and many others. The system will not be triggered by water (rain, condensation, etc.) or silicone oil (roller lubricant).

NOTE: If the system has detected a chemical, the pump tube must be replaced, and the pump head and roller assembly must be thoroughly cleaned. Failure to clean the roller assembly will void the warranty.

NOTE: If the TFD alarm is triggered, the pump will stop, and close an alarm output.

9.1 Confirming Chemical Detection

To determine if a chemical will be detected by the system:

1. Remove the pump head cover, and the pump tube and roller assembly.
2. Place a small amount of chemical in the bottom of the pump head that is enough to cover the sensors.
3. Replace **only** the pump head cover.
4. Turn on the pump by pressing the Start & Stop key.

   NOTE: If the TFD system **detects** a chemical, the pump will stop after a two-second confirmation period.

   NOTE: If the TFD system **does not detect** a chemical, the pump will continue to operate after the confirmation period.

5. Carefully clean the chemical out of the pump head. Ensure to remove all the chemical traces from the sensor probes.
6. Replace the roller assembly and tubing.
7. Replace the pump head cover.
8. Press the Start & Stop key to clear the alarm condition.
9. Restart the pump.

10.0 PUMP MAINTENANCE

CAUTION

Always wear protective clothing, face shield, safety glasses and gloves when working on or near your metering pump. Additional precautions should be taken depending on solution being pumped. Refer to MSDS precautions from your solution supplier.

10.1 Routine Inspection and Maintenance

The pump requires minimal maintenance. However, the pump and all the accessories should be checked weekly, especially when pumping chemicals. Inspect all the components for signs of leaking, swelling, cracking, discoloration, or corrosion. Immediately replace worn out or damaged components.

Cracking, crazing, or discoloration during the first week of operation are signs of a severe chemical attack. If this occurs, perform the following steps:

1. Immediately remove the chemical from the pump.
2. Determine which parts are being attacked.
3. Replace the damaged parts with parts that have been manufactured using more suitable materials.
4. After servicing, operate the pump to verify normal operation.

NOTE: The manufacturer does not assume responsibility for damage to a pump that has been caused by a chemical attack.

10.2 Cleaning and Lubricating the Pump

- The pump will require occasional cleaning, and it will depend on the severity of service.
- When changing the pump tube assembly, the pump head chamber, the roller assembly, and the pump head cover should be wiped of any dirt and debris.
- Clean the motor shaft with a clean towel, and then apply a small amount of grease to the shaft. This will help prevent the rotor from sticking to the motor shaft.
- Periodically, or when necessary, grease the pump head cover bearing. Apply a small amount of grease (Aeroshell aviation grease #5 or equivalent).
- 100% silicone lubrication may be used on the roller assembly.
- Periodically clean the injection fitting /check valve assembly, especially since injecting fluids, like sodium hypochlorite, can calcify. These lime deposits and other buildups can clog the fitting, increase back pressure, and interfere with the check valve operation.
- Periodically clean the suction strainer.

11.0 TUBE REPLACEMENT

CAUTION Prior to service, pump clean water through the pump and suction / discharge line to remove any chemical.

CAUTION Always wear protective clothing, face shield, safety glasses and gloves when working on or near your metering pump. Additional precautions should be taken depending on solution being pumped. Refer to MSDS precautions from your solution supplier.

CAUTION Use the provided Tube Installation Tool to leverage tubing into the pump head. **Do not use your fingers.**

CAUTION Use extreme caution when replacing the pump tube. **Do not place your fingers near the rollers.**

The pump tube assembly will eventually become non-operational if it is not regularly inspected and replaced. The tube life is affected by many factors, such as the type of chemical being pumped, the amount of back pressure, the motor revolutions per minute (RPM), and temperature.

11.1 Provided Tool



Tube Installation Tool
90002-278

11.2 Tube Removal

CAUTION **Safety first**. **Remove the pressure**. Relieve (remove) the system pressure on the discharge and suction side of the pump. Failure to do so will cause the solution to squirt when disconnecting the tube connections.

1. Disconnect the system plumbing from the pump tube adapters.
2. Press the Start & Stop key to stop the pump.
3. Remove the three black thumb screws from the front of the pump head cover by unscrewing counterclockwise. Remove the pump head cover by pulling straight out.



4. Press the Start & Stop key to start the pump.

5. With the pump running, pull the inlet (suction) fitting out of the pump head. Guide the tube counterclockwise away from the rollers.

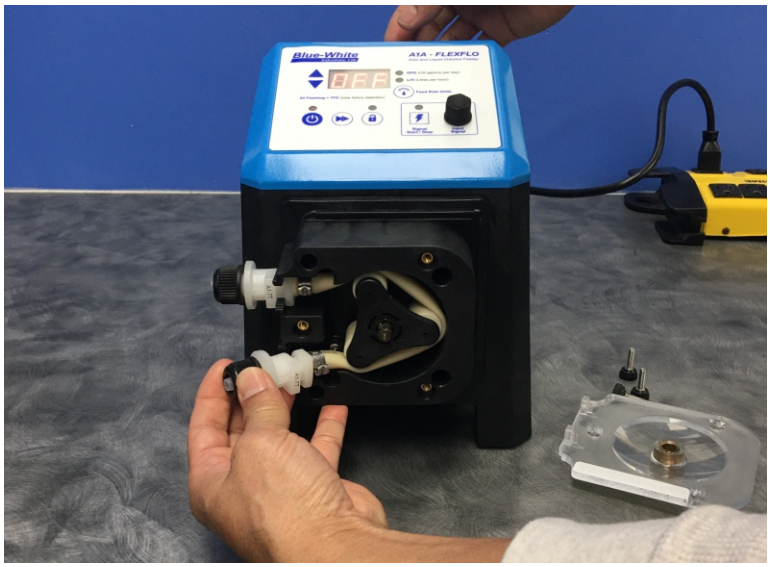

6. Pull the outlet (discharge)fitting out of the pump head.



7. Press the Start & Stop key to stop the pump.

11.3 Tube Installation

NOTE: Thoroughly clean the pump head and rotor. The rotor can be removed by pulling it straight out. After cleaning, push the rotor back on the shaft.

1. Press Start & Stop key to start the pump.

2. Insert the inlet (suction) side of the pump tube fitting into the lower retaining slot of the pump head. Carefully guide the pump tube into the pump head.

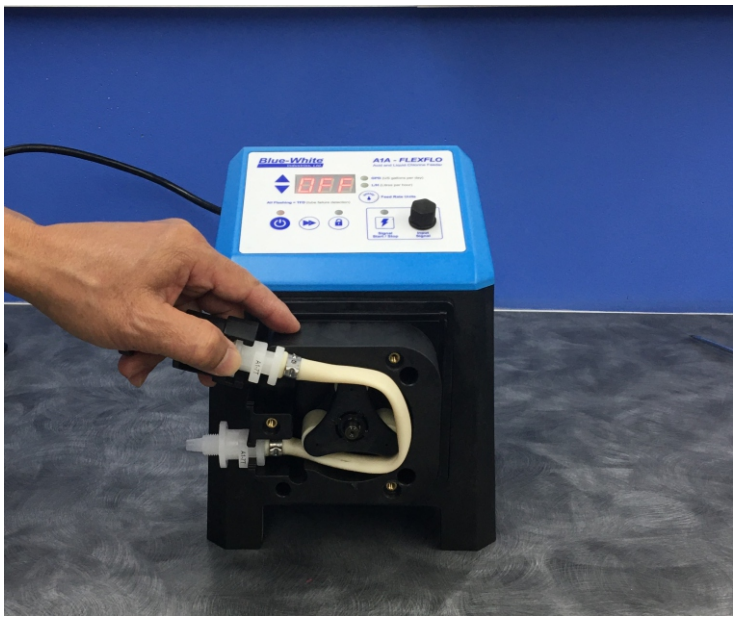

3. Stretch the tube slightly and insert the outlet (discharge) fitting into the upper retaining slot of the pump head.

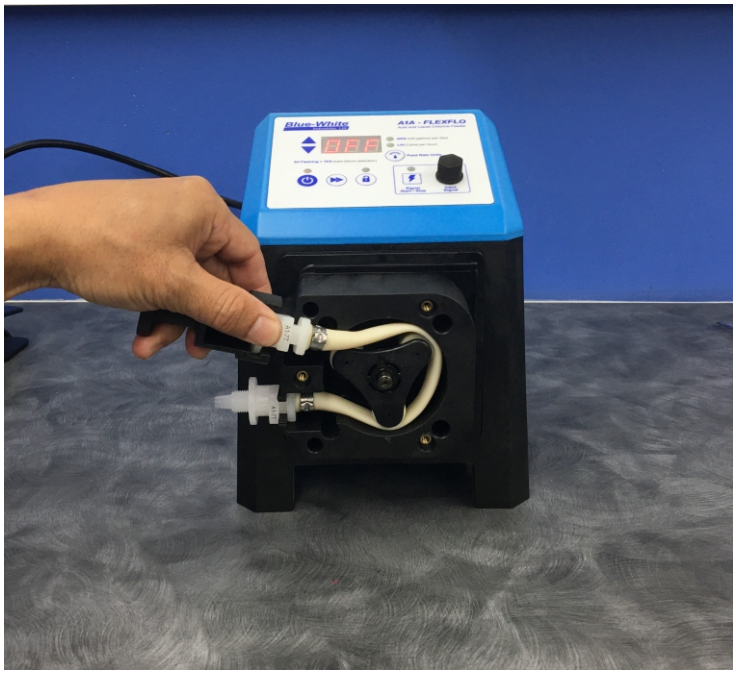

4. Pull the outlet fitting out of the pump head.

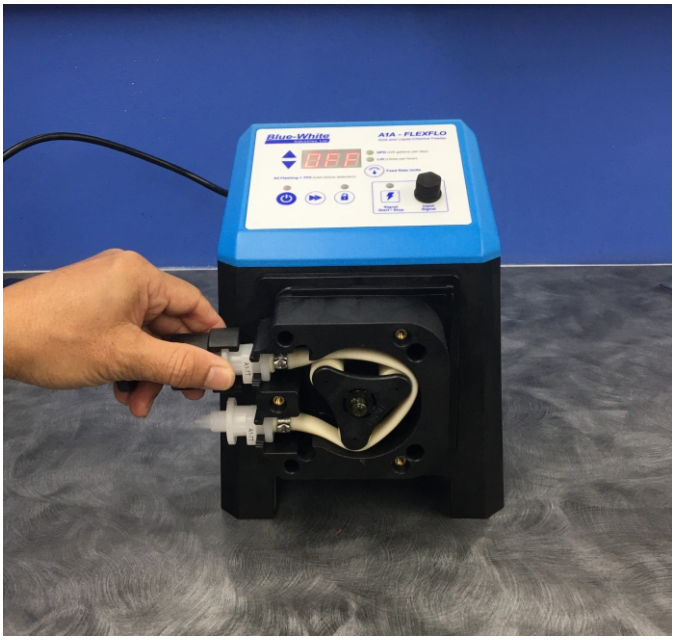

5. Place the clear cover onto the pump head. Secure the cover with the provided three thumb screws. The pump is now ready for operation.



12.0 PUMP HEAD REPLACEMENT PARTS LIST

Item	Description	Part	Quantity
1	Spacer, back	90011-014	1
2	Roller assembly complete (rotor)	71000-350	1
3	Tube assembly, 3/8” OD tube compression, Flex-A-Prene®	A1-7T	1
4	Pump head cover, polycarbonate	71000-156	1
5	Thumb screw with 9/64” key drive, maximum torque 6-8 in. lbs. [1]	90011-160	3
6	Tube nut, compression, for 3/8” tubing [2]	C-330-6	2

NOTES:

1 - Three required per pump. Sold individually.
2 - Two required per pump. Sold individually.

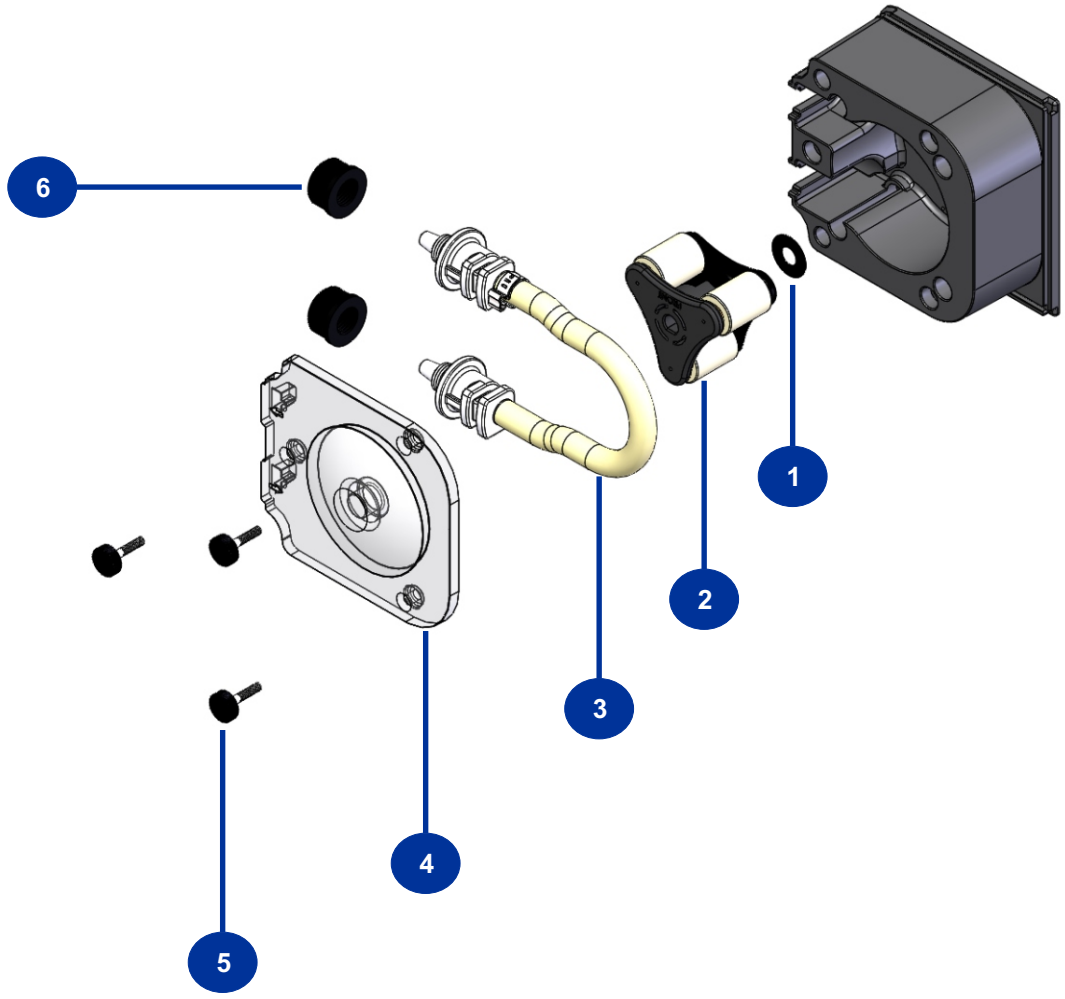

13.0 WARRANTY

13.1 Limited Warranty

The pump is a quality product and is warranted for 36 months from date of purchase (proof of purchase is required). The pump will be repaired or replaced at our discretion. The pump head and roller assembly are warranted against damage from a chemical attack when the proper Tube Failure Detection(TFD) system instructions and maintenance procedures are followed.

13.2 What is not Covered

- **Pump Tube Assemblies and rubber components. They are perishable and require periodic replacement.**
- **Pump removal, or re-installation, and any related labor charge.**
- **Freight to the factory, or ProSeries service center.**
- **Pumps that have been tampered with, or in pieces.**
- **Damage to the pump that results from misuse, carelessness (such as chemical spills) on the enclosure, abuse, lack of maintenance, or alteration that is out of Blue-White Industries, Ltd.'s control.**
- **Pumps damaged by faulty wiring, power surges, or acts of nature.**

Blue-White Industries, Ltd. does not assume responsibility for any loss, damage, or expense directly or indirectly related to or arising out of the use of its products. Failure must have occurred due to defect in material or workmanship and not as a result of operation of the product other than in normal operation as defined in the pump operation manual.

The warranty status is determined by the pump's serial label and the sales invoice or receipt. The serial label must be on the pump and be legible. The warranty status of the pump will be verified by Blue-White Industries, Ltd. or a factory authorized service center.

13.3 Other Important Warranty Information

Be advised that the injection and metering devices are not intended as a means of treating water to render it suitable for human consumption. When used as hypochlorinators, they are meant to destroy bacteria and algae contamination, before its removal by filtration. Acid and soda injectors are used for PH control (balance). Blue-White Industries, Ltd. injectors are factory tested with only water for pressure and performance. Installers and operators of these devices must be well informed and aware of the precautions to be taken when injecting various chemicals, especially those considered hazardous or dangerous. Eye protection must be worn when working around this product or any other type of metering pump.

Should it become necessary to return the pump for repair or service, attach the information regarding the chemical used. Some residue may be present within the unit, which could be hazardous to service personnel. Blue-White Industries, Ltd. will not be liable for any damage that may result from the use of chemicals with their injectors and its components.

13.4 Obtaining In-Warranty Repair

1. Contact the factory to obtain a Return Material Authorization (RMA) number.

   NOTE: Warranty service must be performed by the factory.

2. Carefully pack the pump to be repaired. It is recommended to include the foot strainer and injection/check valve fitting since these devices may be clogged and part of the problem.

   NOTE: Damage caused by improper packaging is the responsibility of the sender.

3. Enclose a brief description of the problem.

4. Enclose the original invoice or sales receipt, or a copy showing the date of purchase.

5. Prepay all shipping costs. **Cash on Delivery (COD) shipments will not be accepted**.

6. When the in-warranty repair or replacement is completed, the factory pays for return shipping to the dealer or customer.



Users of electrical and electronic equipment (EEE) with the WEEE marking per Annex IV of the WEEE Directive must not dispose of end of life EEE as unsorted municipal waste, but use the collection framework available to them for the return, recycle, recovery of WEEE and minimize any potential effects of EEE on the environment and human health due to the presence of hazardous substances. The WEEE marking applies only to countries within the European Union (EU) and Norway. Appliances are labeled in accordance with European Directive 2002/96/EC.

Contact your local waste recovery agency for a *Designated Collection Facility* in your area.

APPENDIX A: ACRONYMS

°C	Celsius
°F	Fahrenheit
AC	Alternating current
bar	Unit of pressure
CIP	Clean-in-place
cm	Centimeters
COD	Cash on Delivery
D	Depth
DC	Direct current
EEE	Electrical and electronic equipment
EP	Ethylene propylene
ETL	Electrical Testing Labs/Intertek
EU	European Union
FDA	Food and Drug Administration
FKM	Fluoroelastomer
FVS	Flow Verification Sensor
GF	Glass fiber
GPD	Gallons per day
H	Height
Hz	Hertz
ID	Inside diameter
IO	Input/Output
Kg	Kilogram
lb.	Pound
LLDPE	Linear low-density polyethylene
LPH	Liters per hour
mA	Milliampere
MSDS	Material Safety Data Sheet
N.C.	Normally Close
N.O.	Normally Open
NPT	National Pipe Thread
NSF	National Sanitation Foundation
OD	Outside diameter
P.N.	Part Number
PBT	Polybutylene Terephthalate
PE	Polyethylene
PSI	Pounds per Square Inch
PVC	Polyvinyl chloride
PVDF	Polyvinylidene fluoride
RCD	Residual-current device
Rev.	Revision
RMA	Return Material Authorization
RPM	Revolutions per minute
SIP	Steam-in-place
SS	Solid state
TFD	Tube Failure Detection
TFE/P	Tetrafluoroethylene propylene
UL	Underwriters Laboratories
US	United States
V	Volt
W	Watt
W	Width
WEEE	Waste Electrical and Electronic Equipment

APPENDIX B: MODEL NUMBER MATRIX

FLEXFLO® Peristaltic Metering Pump

Engineering and Technical Data

Model Number Matrix

FlexFlo® Model Number	
A1A	FlexFlo® Peristaltic Metering Pump
Power Cord (Operating voltage requirement 96VAC to 264VAC)	
4	115V 50/60Hz, power cord NEMA 5/15 plug (US)
5	230V 50/60Hz, power cord NEMA 6/15 plug (US)
6	220V 50/60Hz, power cord CEE 7/V11 plug (EU)
8	240V 50/60Hz, power cord AS 3112 plug (Australia/New Zealand)
9	230V 50/60Hz, power cord BS 1363/A plug (United Kingdom)
X	No Power Cord
Pump Tube Material, Pump Tube Size, Operating flow range	
7T	Flex-A-Prene® .250 ID, .01 GPD to 100 GPD
Miscellaneous Options (Leave blank if not used)	
5	A-014NK-6A injector PVDF
T7	7 gallon chemical tank system
T15	15 gallon chemical tank system
T30	30 gallon chemical tank system

A1A	4	-	7T	-	5	Sample Model Number

THIS PAGE IS LEFT INTENTIONALLY BLANK.

THIS PAGE IS LEFT INTENTIONALLY BLANK.

Blue-White
Industries, Ltd.

5300 Business Drive, Huntington Beach, CA 92649, USA
Phone: 714-893-8529 **FAX:** 714-894-9492
E mail: sales@blue-white.com **or** techsupport@blue-white.com **URL:** www.Blue-White.com

P.N. 80000-605 Rev. 7 20200323