FLEXFLO® A1A

Specially designed for pools, spas, and water parks

Feed rates from .01 to 100 GPD

Pressures to 40 PSI

Tube Failure Detection (TFD) system

Variable speed brushless DC motor

3-year warranty



NEMA 4X

Exclusive:
TFD system
Tube Failure Detection
Patents 7,001,153 & 7,284,964

Features

- Peristaltic pump design does not have valves that can clog requiring maintenance.
- Self priming - even against maximum line pressure. Bypass valves are not required. Cannot vapor lock or lose prime.
- Output rates from .01 to 100 GPD (.01 to 15.8 LPH) and pressures up to 40 PSI (2.76 Bar).
- Variable speed brushless DC motor.
- Patented Tube Failure Detection (TFD) system. Senses tube failure by detecting chemical in the pump head, shuts off the pump and activates a 48VDC @ 80mA relay. No false triggering.
- Remote Start/Stop: Non-powered dry contact closure for remote start/stop.
- Three Nylon molded squeeze rollers for optimum squeeze, unparalleled accuracy, and long tube life.
- Heavy duty rotor - single piece plastic rotor means no flexing and increased accuracy with no metal springs or hinges to corrode.
- Chemically resistant tubing capable of pumping bleach (sodium hypochlorite), calcium hypochlorite 20%, and muriatic acid (hydrochloric acid).

Engineering and Technical Data

Engineering Specifications

Maximum Working Pressure (Excluding pump tubes)[1]	40 PSI (2.76 bar)
Maximum Suction Lift	30 ft. of water at sea level (14.7 atm psi)
Ambient Operating Temperature	14°F to 125°F (-10°C to 52°C)
Ambient Storage Temperature	-40°F to 158°F (-40°C to 70°C)
Operating Voltage	115V60Hz 1 PH (0.6A max.) 220V50Hz 1 PH (0.3A max.) 230V60Hz 1 PH (0.3A max.) 230V50Hz 1 PH (0.3A max.) 240V50Hz 1 PH (0.3A max.)
Power Cord Options	115V50/60Hz = NEMA 5/15 (USA) 230V50/60Hz = NEMA 6/15 (USA) 220V50/60Hz = CEE 7/VII (EU) 240V50/60Hz = AS 3112 (Australia/New Zealand)
Motor	Brushless DC, 50W.
Duty Cycle	Continuous
Flow Range Adjustment	0.01 - 100 GPD (0.01 - 15.8 LPH)
Enclosure	NEMA 4X (IP66), Valox® (PBT) & PA12
Maximum Overall Dimensions	7.25” W x 9” H x 10” D (18.5 W x 22.9 H x 25.2 D cm)
Product Weight	6 lb. (2.7 Kg)
Approximate Shipping Weight	13 lb. (5.9 Kg)
Approximate Shipping Dimensions	10.5” W x 13.75” H x 11” D (26.7 W x 35 H x 28 D cm)

Materials of Construction

Wetted Components

Pump Tube Assembly	
Tubing	Flex-A-Prene®
Adapter Fittings	PVDF
Injection / Back-Flow Check Valve	
Body & Insert	Polypropylene (optional PVDF)
Check Ball	Ceramic
Spring	Hastelloy C-276
Ball Seat O-Ring	TFE/P
Static Seal O-Ring	FKM
Ancillary Items Provided	
Suction Tubing	3/8” OD x 1/4” ID x 10’ Clear PVC
Discharge Tubing	3/8” OD x 1/4” ID x 10’ Polyethylene (LLDPE)
Suction Strainer	Polypropyle
Weight	Ceramic

Non-Wetted Components

Enclosure	Valox® (PBT) & PA12 thermoplastic
Pump Head	Valox® (PBT) thermoplastic
Pump Head Cover	Polycarbonate for added strength and chemical resistance. Permanently lubricated sealed motor shaft support ball bearing.
Cover Screws	Stainless steel, polypropylene cap
Roller Assembly	
Rotor	Valox® (PBT)
Rollers	Nylon
Roller Bearings	Bronze
TFD System Sensor Pins	Hastelloy C-276
Power Cord	3 conductor, SJTW-A water-resistant
Tube Installation Tool	GF nylon
Mounting Brackets and Hardware	316 stainless steel screws GF nylon bracket

Engineering and Technical Data

Output Specifications

Flex-A-Prene® A1A Tube Pumps [1]

Feed Rate [2]		Maximum Pressure PSI (bar) [3]	Maximum Temperature °F (°C) [3]	A1A Model Numbers		
GPD	LPH			115V AC [4]	230V AC [5]	220V AC [5]
0.01-100	0.01-15.8	40 (2.76)	185 (85)	A1A4-7T	A1A5-7T	A1A6-7T

NOTES:

1 - For optimum tube life, specify the pump to operate at the lowest possible feed rate and pressure.
2 - Meets FDA criteria for food
3 - Excellent chemical resistance
4 - Clean-in-place (CIP)
5 - Steam-in-place (SIP)

Dimensions

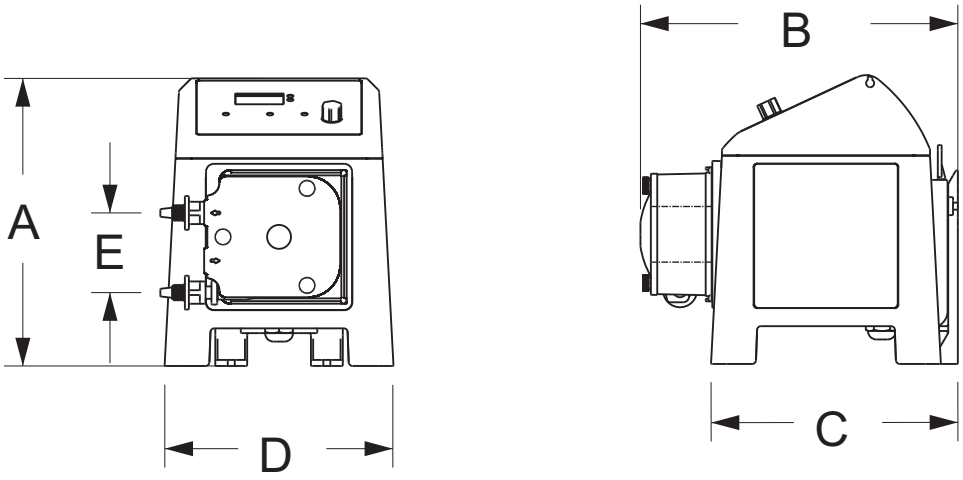

A1A Series

Dimension	Inches (in.)	Centimeters (cm)
A	9"	22.9
B	10"	25.2
C	7.75"	19.6
D	7.25"	18.5
E	2.5"	6.4

Engineering and Technical Data

Model Number Matrix

FlexFlo® Model Number	
A1A	FlexFlo® Peristaltic Metering Pump

Power Cord (Operating voltage requirement 96VAC to 264VAC)	
4	115V 50/60Hz, power cord NEMA 5/15 plug (US)
5	230V 50/60Hz, power cord NEMA 6/15 plug (US)
6	220V 50/60Hz, power cord CEE 7/V11 plug (EU)
8	240V 50/60Hz, power cord AS 3112 plug (Australia/New Zealand)
9	230V 50/60Hz, power cord BS 1363/A plug (United Kingdom)
X	No Power Cord

Pump Tube Material, Pump Tube Size, Operating flow range	
7T	Flex-A-Prene® .250 ID, .01 GPD to 100 GPD

Miscellaneous Options (Leave blank if not used)	
5	A-014NK-6A injector PVDF
T7	7 gallon chemical tank system
T15	15 gallon chemical tank system
T30	30 gallon chemical tank system

A1A	4	-	7T	-	5	Sample Model Number

Blue-White® Industries, Ltd.
5300 Business Drive, Huntington Beach, CA 92649
Tel: 714-893-8529 **Fax:** 714-894-9492
www.blue-white.com **Email:** sales@blue-white.com

Patents: 4,496,295 - 7,001,153 - 7,284,964 and other patents pending
All trademarks are the property of their respective owners.