Low-profile, high-speed and high-pressure air pump

1. Feature



- High speed & high pressure air blowing
- Less pulsation air flow
- Quick response
- Small size : 20 x 20 mm, t=1.85mm (nozzle height : 1.6mm)
- Weight : 1.4±0.2 g

2. Application

- Air pump application
- Spot air blowing application
- Liquid sending at high pressure air
- Air sucking , blowing , circulation application

3. Part Number Configuration

MZ	B1	001	T02
①	②	③	④

① Product ID

② Series (B : blower)

③ Representative characteristic

④ Packaging (T : tray)

Note:

This catalog is for reference only and not an official product specification document, therefore, please review and approve our official product specification before ordering this product.

4. Dimensions & Marking (Unit: mm)

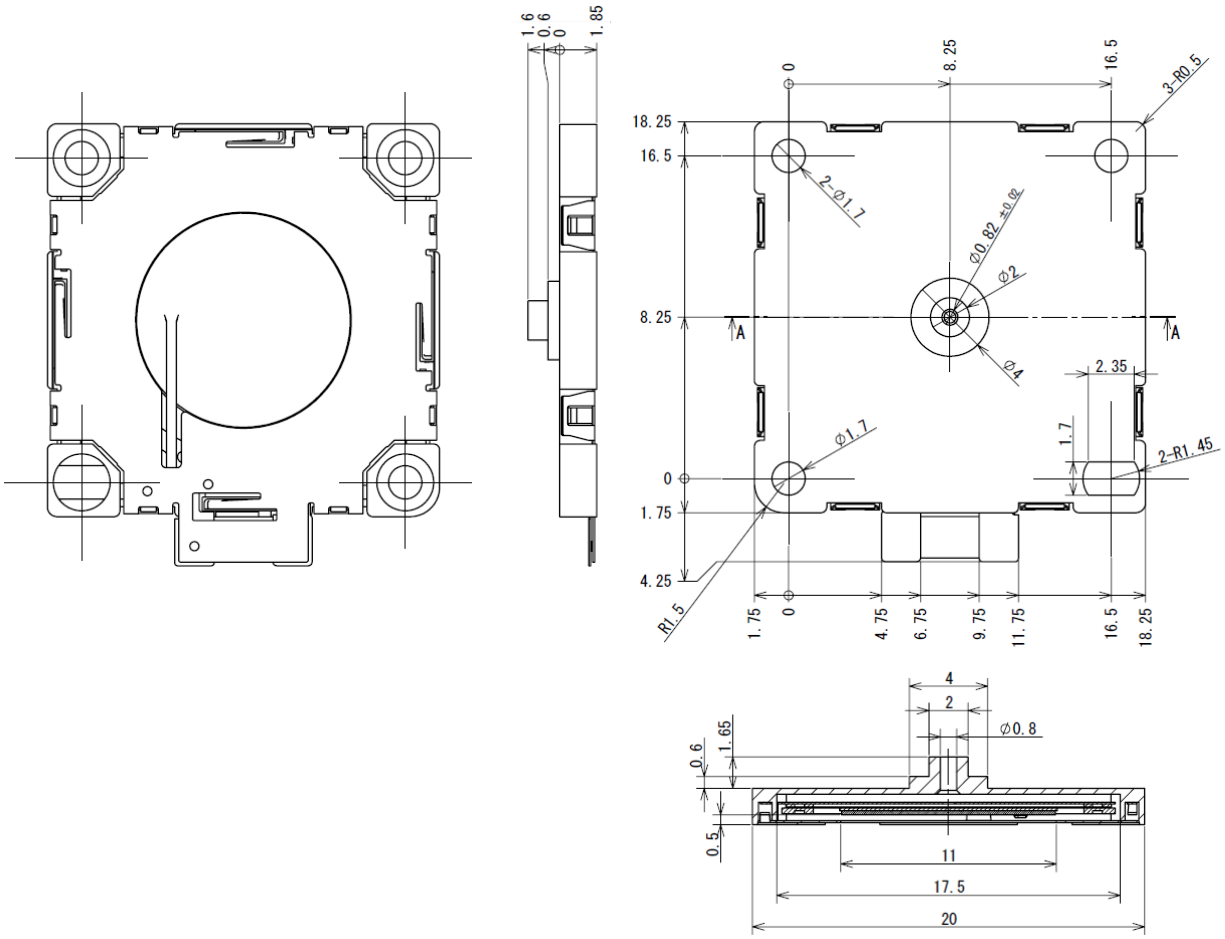

Item	Specification	Condition
Outside dimension/tolerance	20±0.15mm	
thickness tolerance	1.85±0.2mm	except the nozzle
Nozzle height/tolerance	1.60±0.15mm	from top of the nozzle to top plate

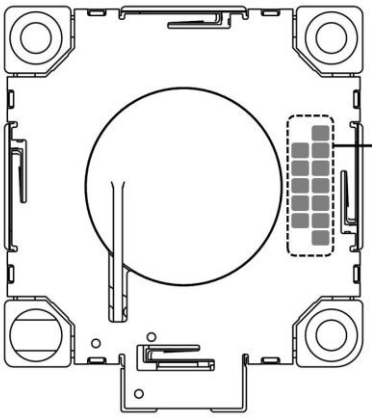

(Example)

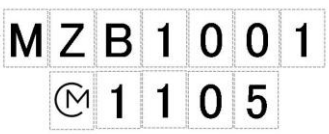

Upper Line : Product name
Middle Line : Year & Week

5. Maximum Ratings

Rating	Value	Unit
Operating Sinusoidal Voltage Range	10 to 20	Vp-p
Absolute maximum rating voltage	30	Vp-p
Operating Temperature Range	0 to +70	°C

6. Electrical Characteristics

Parameter	Specification	Units	Conditions
Resonant Frequency	24.0 to 27.0	kHz	Section 7
Flow Rate	≧0.70	L/min.	Section 7 Back pressure: 0.05kPa
Static Pressure	≧1.42	kPa	Section 7
Temperature Characteristics Flow Rate (from initial value)	±20% (Typ)	-	Section 7

7. Measuring method

(Measuring Condition)

Driving voltage: 15Vp-p
Unless otherwise specified, the standard range of atmospheric conditions for making measurements and tests is as follows:

Ambient temperature : 15 °C to 35°C
Relative humidity : 25% to 85%

If there is any doubt about the results, measurement shall be made within the following limits:

Ambient temperature : 25 ± 1 °C
Relative humidity : 63% to 67%

(Measuring cross-line figure)

Frequency / Power consumption / P-Q measuring

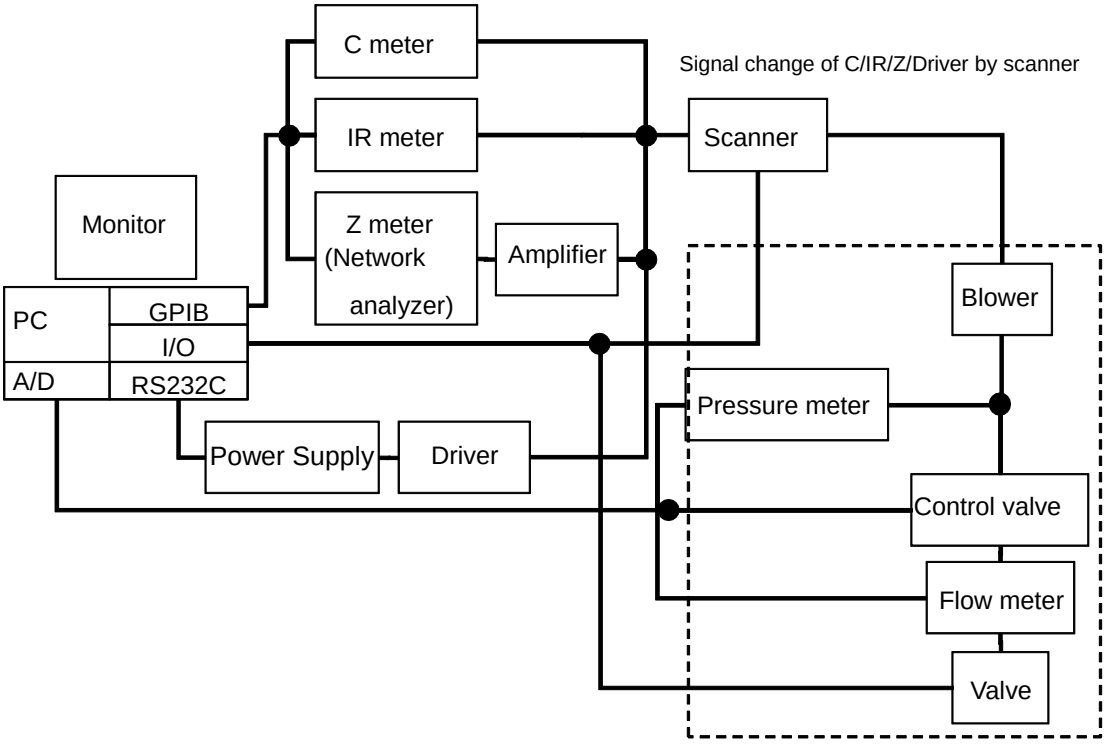

P-Q measuring interface

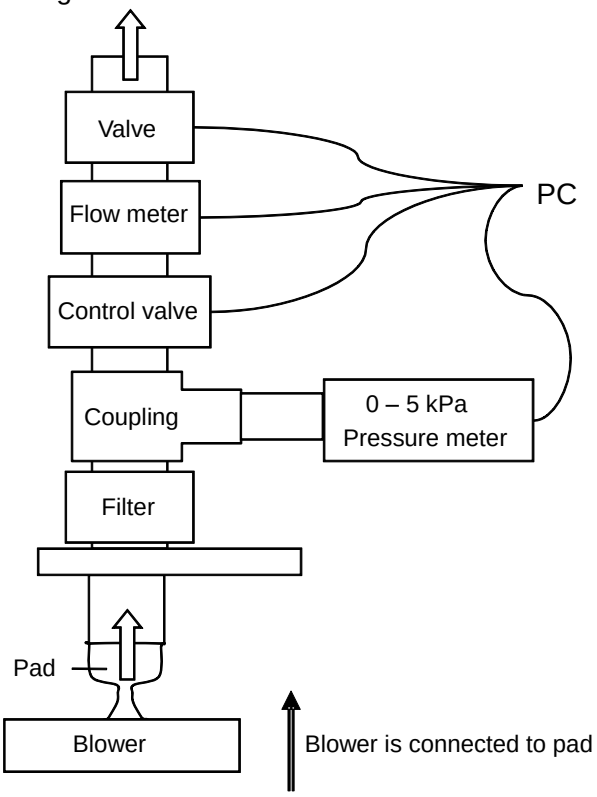

8. Typical Characteristic

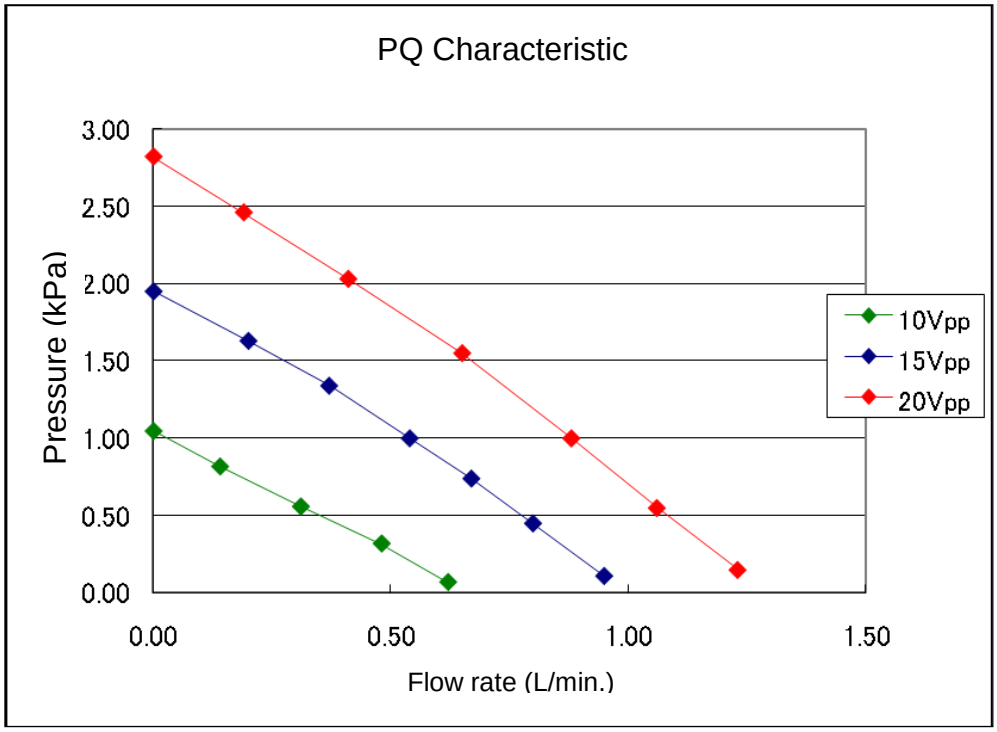

9. Reliability Test

	Item	Test Condition	Number	Result
1	Vibration	Applying the vibration of maximum amplitude 1.5mm and vibration frequency 10 to 500Hz/10G in each of 3 perpendicular directions for 2 hours.	10	G
2	Shock	Applying the shock of 30G once for six aspects.	10	G
3	Solder-ability	After being kept in pressure cooker at +105 °C and 100%R.H. for 4 hours, electrodes terminal shall be placed in a solution of rosin 25wt% and IPA75wt% for 5 seconds, and then immersed in a solder bath of +245±5 °C for 3±0.5 seconds. Only terminal board shall be tested.	5	G

Note) At Murata test condition

	Item	Test Condition	Number	Result
4	Dry Heat (Storage)	Blower shall be left in a chamber (Temperature: +85 ± 2 °C) for 500 hours, then measured after leaving in natural condition for 1 hour.	20	G
5	Dry Heat, Power Supplied Test	20V is applied to blower and blower shall be left in a chamber (Temperature: +85±2 °C) for 500 hours, then measured after leaving in natural condition for 1 hour.	20	G
6	Cold (Storage)	Blower shall be left in a chamber (Temperature: -40±2 °C) for 500 hours, then measured after leaving in natural condition for 1 hour.	20	G
7	Humidity	Blower shall be left in a chamber (85% R.H. at +85±2 °C) for 500 hours, then measured after leaving in natural condition for 1 hour.	20	G
8	Humidity, Power Supplied Test	20V is applied to blower and blower shall be left in a chamber (93% R.H. at +60±2 °C) for 500 hours, then measured after leaving in natural condition for 1 hour.	20	G
9	Thermal Shock	After being kept at room temperature, blower shall be placed at temperature of -40 °C. After 30 minutes at this temperature, blower shall be within a few minutes placed at temperature of +85 °C. After 30 minutes at this temperature and blower shall be returned to -40 °C again. After 500 above cycles, blower shall be returned to room temperature. And blower shall be measured after being placed in natural condition for 1 hour.	20	G

Note) At Murata test condition

10. Tray Packaging

Dimensions of Tray

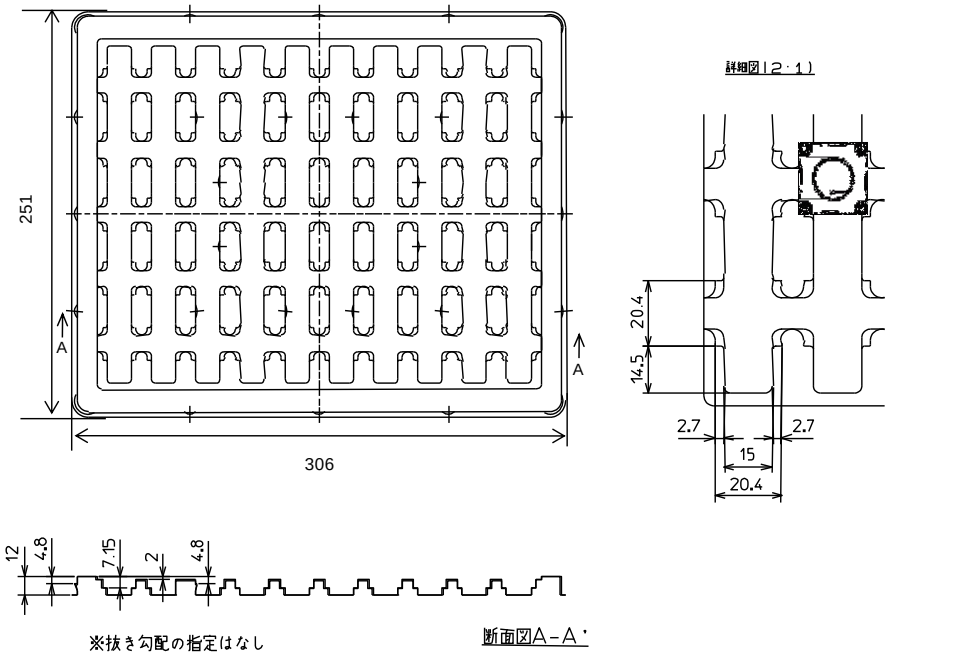

Packaging Form

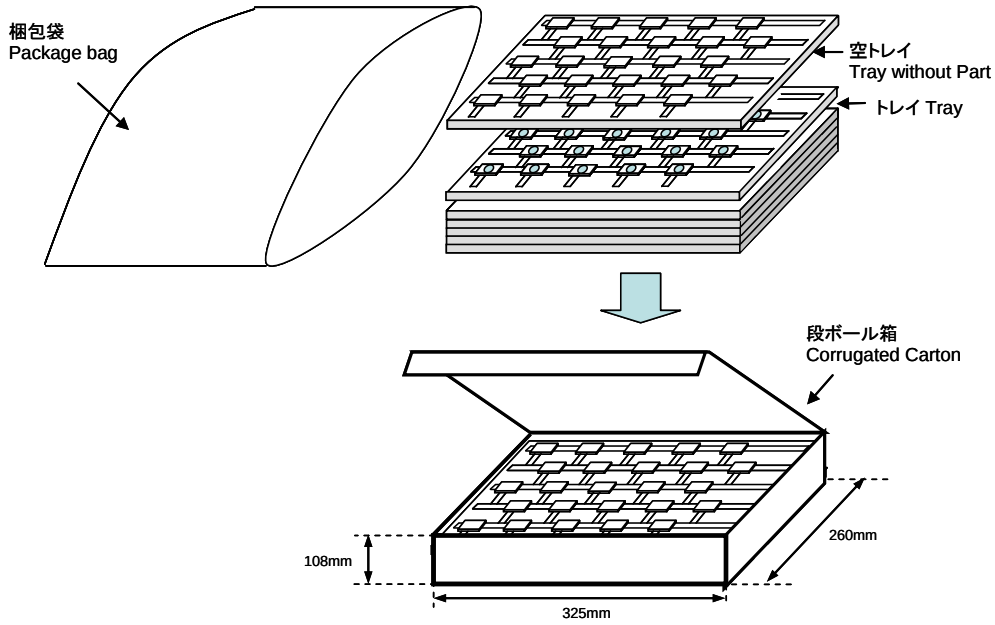

The Quantity per a box

Maximum Packaging Quantity: 700 pieces max. (= 50 pieces /tray x 14 trays)
However, total number of trays is 15 pieces because empty tray is set on top of other tray.

Content of Outer Label

The minimum packaging unit shall be a box. Each minimum package unit of blowers shall be in a carton box and it shall be clearly marked with your company name, customer's and Murata's part numbers, quantity and soon.

11. Condition for soldering

Please use the soldering iron.

Soldering iron condition

Temperature of iron	Max350 °C
Contact time	Within 3 second

The soldering iron don't touch a product body directly.
Soldering must be carried out by the above mentioned conditions to prevent products from damage.
Contact Murata before use if concerning other soldering conditions.

(Murata test data)

Following is the conditions Murata tested.

Item	Condition
Iron head temperature	345±5 °C
Contact time	Within 3 second
Iron head shape	2C
Solder	Lead-free solder (Sn: 96.5%, Ag: 3%, Cu: 0.5%)

NOTICE

1. Storage Conditions:

To avoid damaging the performance and solderability, be sure to observe the following points.

- Store the products in room where the temperature / humidity is stable.
  And avoid such places where there are large temperature changes.
  Please store the products under the following conditions :
  Temperature : -10 to +40 ℃
  Humidity : 10 to 85% R.H.

- Expire date (Shelf life) of the products is 6 months after delivery under the conditions of a sealed and an unopened package. Please use the products within 6 months after delivery. If you store the products for a long time (more than 6months), use carefully because the products may be degraded in the solder-ability and/or rusty. Please confirm solder-ability and characteristics for the products regularly.

- Please do not store the products in a chemical atmosphere (Acids, Alkali, Bases, Organic gas, Sulfides and so on), because the characteristics may be reduced in quality, and/or be degraded in the solder-ability due to the storage in a chemical atmosphere.

- Please do not put the products directly on the floor without anything under them to avoid damp places and/or dusty places.

- Please do not store the products in the places such as : in a damp heated place, in a place where direct sunlight comes in, in place applying vibrations.

- Please use the products immediately after the package is opened, because the characteristics may be reduced in quality, and/or be degraded in the solder-ability due to storage under the poor condition.

- Please do not drop the products to avoid cracking of ceramic element.

2. Handling Conditions:

- Be careful in handling or transporting products because excessive stress or mechanical shock may break products.

- Please do not touch the component (included nozzle, wiring etc.) with bare hands. Please set bottom plate on the downside.

- Please do not touch a wiring to the piezoelectric ceramic of the component inside.

- Applying load on the central area of the product may cause crack in the ceramic element.

- Please handle only edge. Don’t hold nozzle directly and stress to nozzle.

- The component may be damaged if mechanical stress over this specification is applied to the part’s body and nozzle.

- Please pay attention to protect operating circuit from surge voltage provided by something of force such as falling, shock and temperature changing.

- Please pay attention never to apply DC voltage to the product.

- Washing of the component is not acceptable, because it is not sealed.

- Micro blower is sensitive to dirty environments. It brings out best performance and longevity in sealed environments.

- The smoke of tobacco, mosquito-repellant incense etc. may influence a product life

- Please contact us when the component is screwed on body of equipment or fixed with double-side tape.

3. Cleaning Conditions:

Any cleaning is not permitted.

4. Operational Environment Conditions:

Products are designed to work for electronic products under normal environmental conditions (ambient temperature, humidity and pressure). Therefore, products have no problems to be used under the similar conditions to the above-mentioned. However, if products are used under the following circumstances, it may damage products and leakage of electricity and abnormal temperature may occur.

- In an atmosphere containing corrosive gas (Cl_2, NH_3, SO_x, NO_x etc.).
- In an atmosphere containing combustible and volatile gases.
- In a dusty environment.
- Direct sunlight
- Water splashing place.
- Humid place where water condenses.
- In a freezing environment.

If there are possibilities for products to be used under the preceding clause, consult with Murata before actual use.

If product malfunctions may result in serious damage, including that to human life, sufficient fail-safe measures must be taken, including the following:

(1) Installation of protection circuits or other protective device to improve system safety

(2) Installation of redundant circuits in the case of single-circuit failure

5. Limitation of Applications:

The products are designed and produced for application in ordinary electronic equipment (AV equipment, OA equipment, telecommunication, etc). If the products are to be used in devices requiring extremely high reliability following the application listed below, you should consult with the Murata staff in advance.

- Aircraft equipment.
- Aerospace equipment
- Undersea equipment.
- Power plant control equipment.
- Medical equipment.
- Transportation equipment (vehicles, trains, ships, etc.).
- Traffic signal equipment.
- Disaster prevention / crime prevention equipment.
- Data-procession equipment.
- Application which malfunction or operational error may endanger human life and property of assets.
- Application which related to occurrence the serious damage
- Application of similar complexity and/ or reliability requirements to the applications listed in the above.

⚠ Note:

Please make sure that your product has been evaluated and confirmed against your specifications when our product is mounted to your product.

Product specifications are subject to change or our products in it may be discontinued without advance notice.

This catalog is for reference only and not an official product specification document, therefore, please review and approve our official product specification before ordering this product.

(Reference material) Recommended circuit diagram and Maximum driving voltage

Recommended circuit diagram

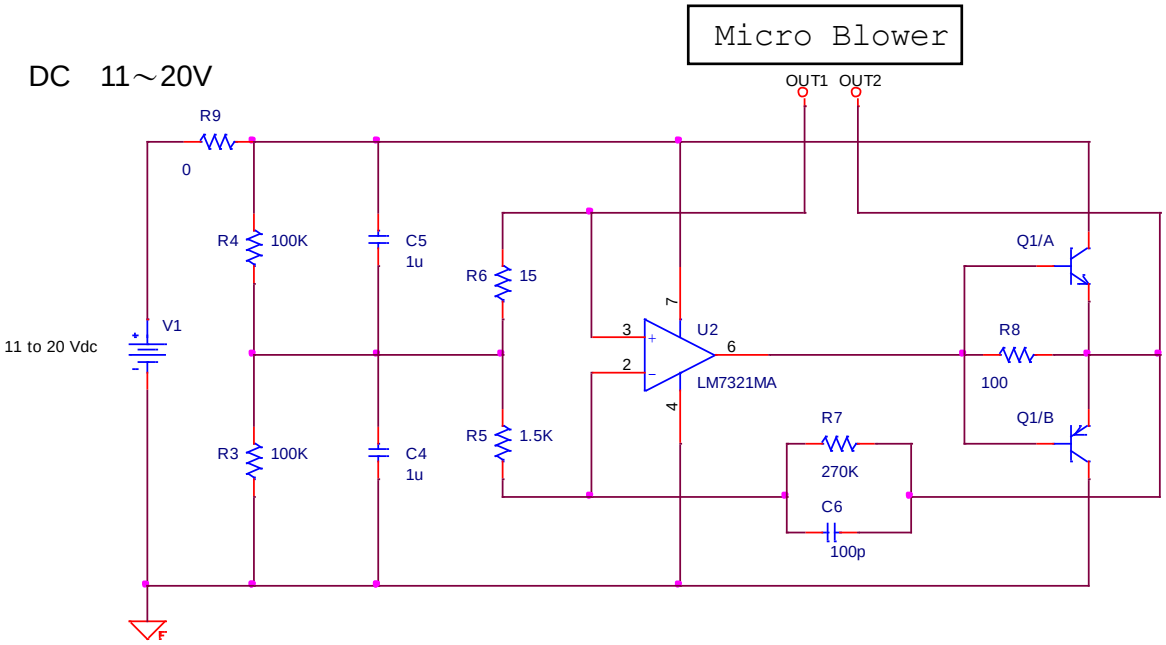

(Parts list)

Code	Name	P/N	Manufacturer
U2	OP amp GBW=20MHz Rail to Rail	LM7321MA	National Semiconductor
Q1	Transistor (PNP/NPN) Ic=500mA	HN1B04F	Toshiba semiconductor & storage products company
R3,R4	Chip resistor 100kΩ 0.1W	RK73B1JTTD104J	KOA
R5	Chip resistor 1.5kΩ 0.1W	RK73B1JTTD152J	KOA
R6	Chip resistor 15Ω 0.1W	RK73B1JTTD150J	KOA
R7	Chip resistor 270KΩ 0.1W	RK73B1JTTD274J	KOA
R8	Chip resistor 100Ω 0.1W	RK73B1JTTD101J	KOA
R9	Jumper chip	RK73Z1JTTD	KOA
C4,C5	Chip Ceramic capacitor 1uF	GRM188R71E105KA12D	Murata Manufacturing Co., Ltd.
C6	Chip Ceramic capacitor 1uF	GRM1882C1H101JA01D	Murata Manufacturing Co., Ltd.

Maximum driving voltage

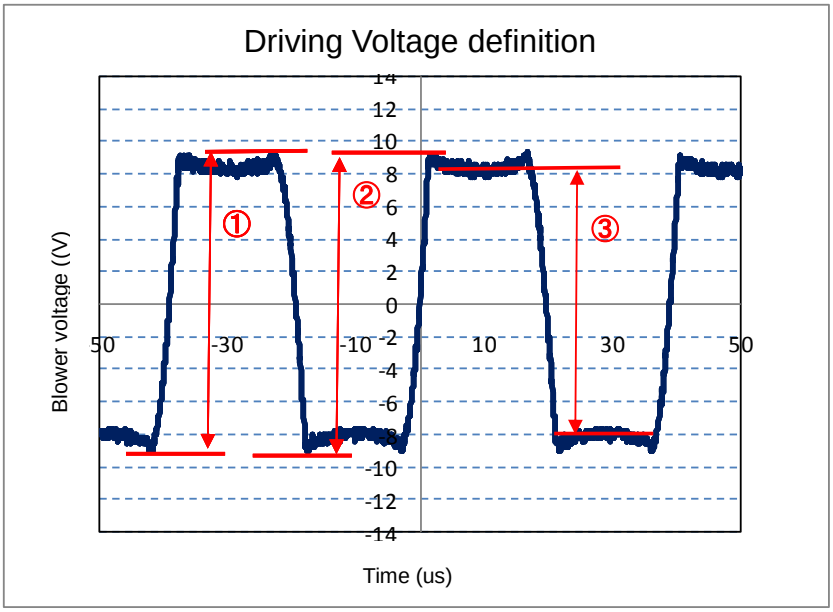

On above wave form, please set each voltage up as the less value than described below.

① 19.0Vpp
② 19.0Vpp
③ 18.5Vpp

Absolute maximum rating voltage

Please set the power-supply voltage for OP amp up as less value than 30V.
There is a possibility that Micro blower breaks if you supply the voltage over than this value momentarily.

(Note) This wave form is outputted when supply DC (from 11V to 20V) to Vpp.
The amplitude voltage depends on the input voltage, and please control supply voltage under absolute max. rating voltage.

Note:

This catalog is for reference only and not an official product specification document, therefore, please review and approve our official product specification before ordering this product.

Mouser Electronics

Authorized Distributor

Click to View Pricing, Inventory, Delivery & Lifecycle Information:

Murata:
MZB1001T02