MICROBLOWER Driver Information

All Rights Reserved, Copyright© Murata Manufacturing Co., Ltd.

MICROBLOWER Sample (How to connect)

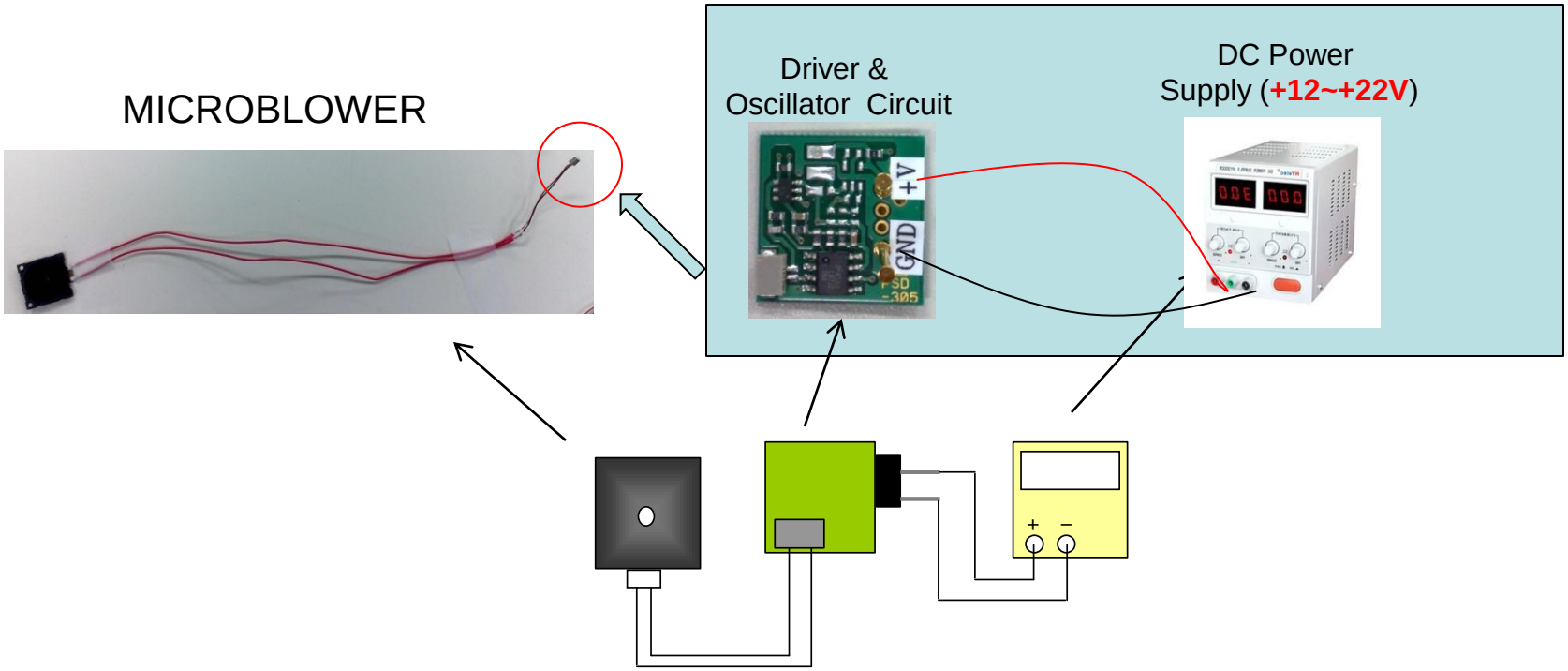

All Rights Reserved, Copyright© Murata Manufacturing Co., Ltd.

Driver Circuit

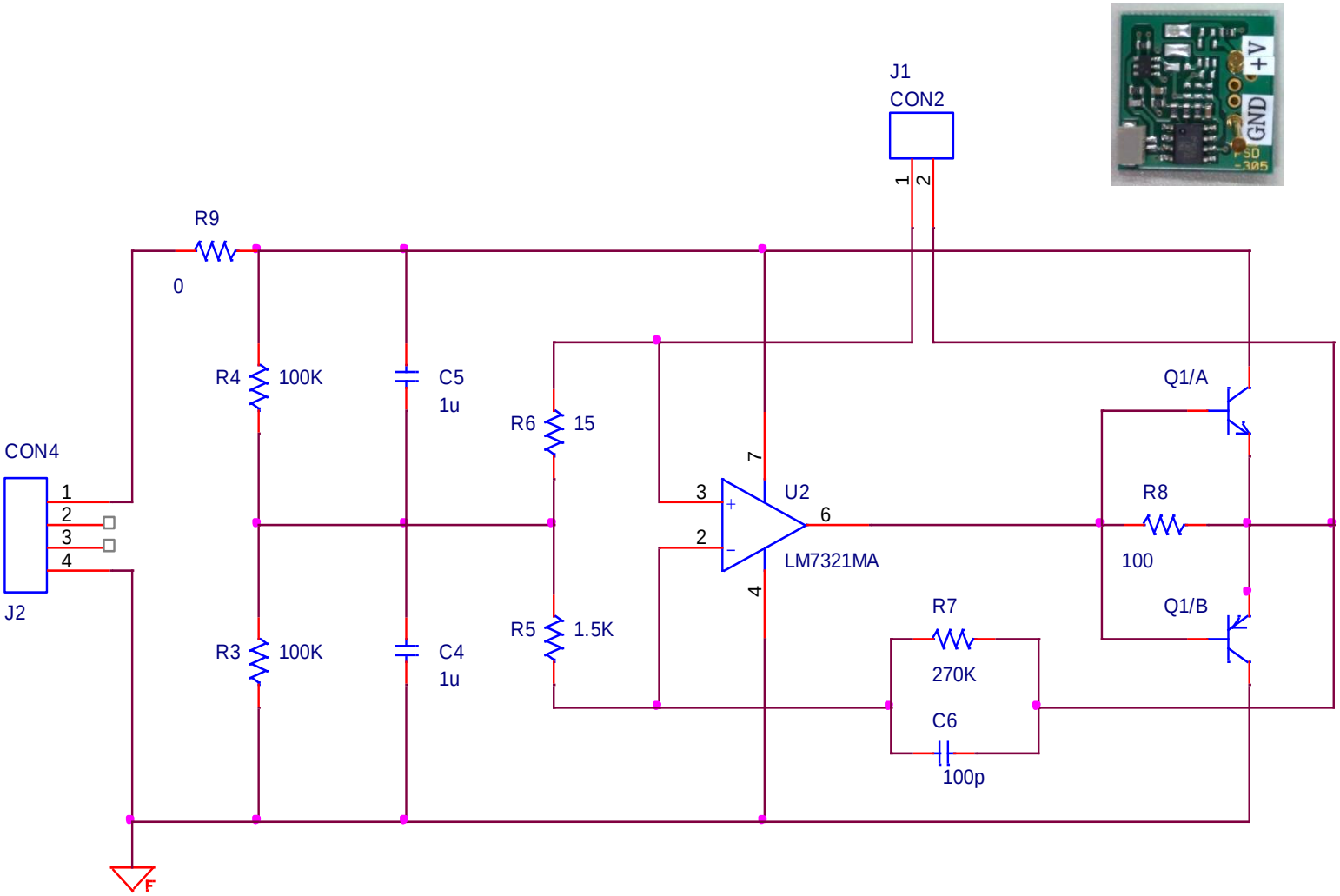

All Rights Reserved, Copyright© Murata Manufacturing Co., Ltd.

Driver Part List – Voltage change

U2	Op Amp	LM7321MA	National Semiconnductor	GBW=20MHz RailtoRail IN/OUT
Q1	Transister(PNP/NPN)	HN1B04F	Toshiba Semiconductor	Ic=500mA
R3,R4	Chip Resistor 100kΩ	RK73B1JTTD104J	KOA	0.1W
R5	Chip Resistor 1.5kΩ	RK73B1JTTD152J	KOA	0.1W
R6	Chip Resistor 15Ω	RK73B1JTTD150J	KOA	0.1W
R7	Chip Resistor 270KΩ	RK73B1JTTD274J	KOA	0.1W
R8	Chip Resistor 100Ω	RK73B1JTTD101J	KOA	0.1W
R9	Short Chip	RK73Z1JTTD	KOA	
C4,C5	Chip Capacitor 1μF	GRM188R71E105KA12D	MURATA	25V X7R
C6	Chip Capacitor 100p	GRM1882C1H101JA01D	MURATA	50Vdc CH
J1	Connector	SM02B-SSR-H-TB	JST	
J2	USB Connector	317A	Chant Sincere	

All Rights Reserved, Copyright© Murata Manufacturing Co., Ltd.

How to apply voltage

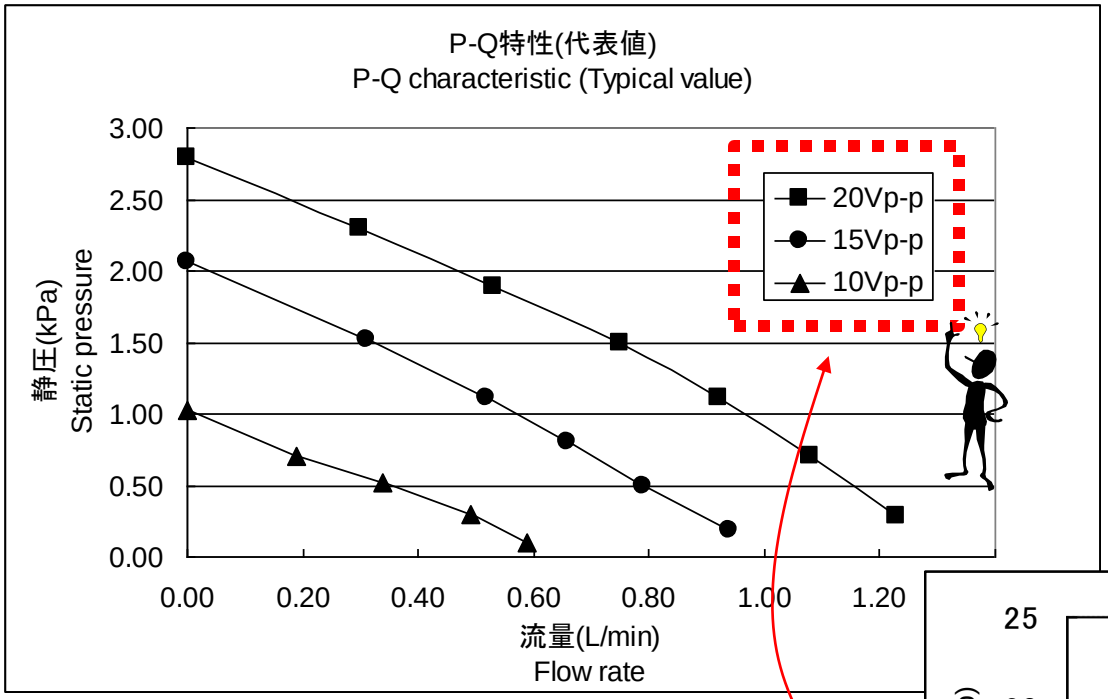

Driver &
Oscillator Circuit



DC Power
Supply (12~22V)



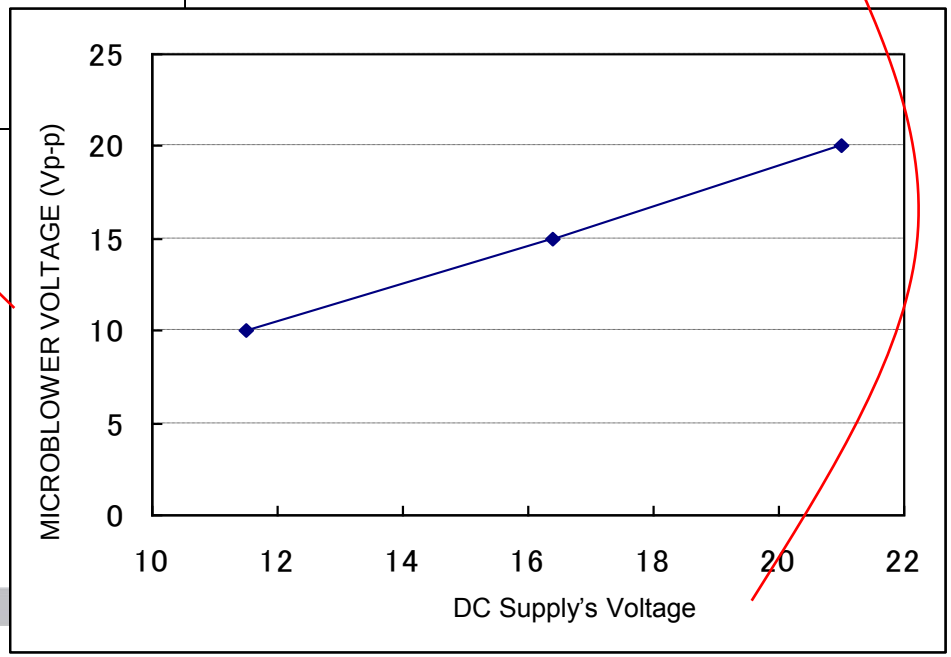

All Rights Reserved, Copyright© Murata Manufacturing Co., Ltd.