Blower (MZBX001) sample manual

1.Driver

MZBD001

1) This driver is self-osc. circuit. It works by only DC voltage input.

2) Connect +Vcc and GND to each pin

3) Input voltage (see table 1)

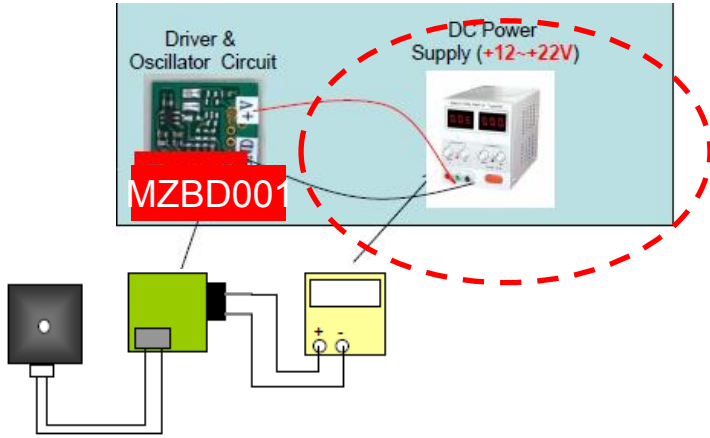

2.Note for evaluation

Don’t touch piezo element directly.

Don’t use in dusty environment (ex. Tobacco, smoke, particle etc.) Ceramic will be broken over 20Vp-p input to blower . This device is not waterproof.

(Table 1)

Supply Voltage	Blower operation voltage
11.5V	10Vpp
16.4V	15Vpp
21V	20Vpp

Supply voltage : 21V(max.)

