Flowmeter Ultrasonic Flow Metering / Dosing Device

Operating Manual

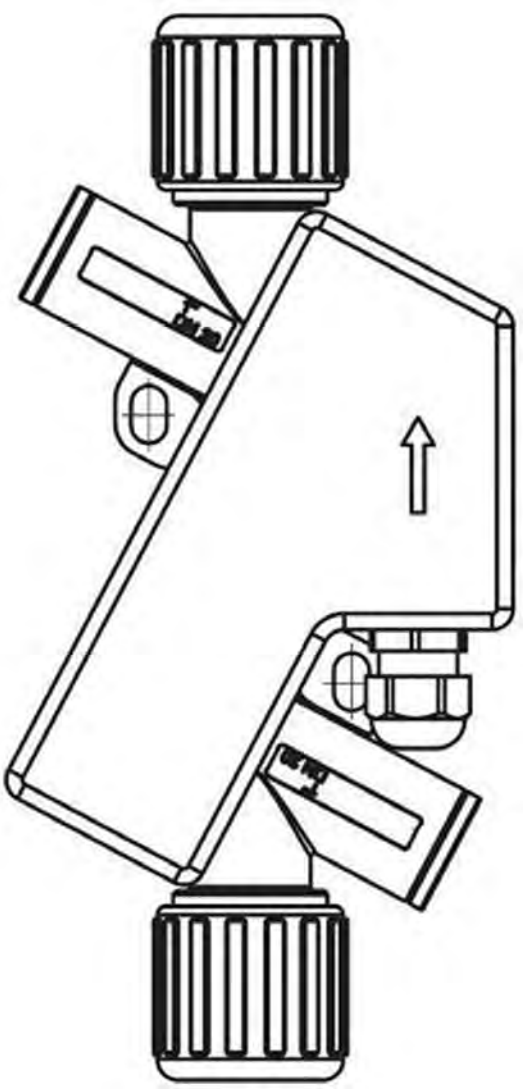

Read the user's manual carefully before starting to use the unit or software.
Producer reserves the right to implement changes without prior notice.

Table of Contents

General safety instructions 01

1. Planning information 02
1.1 Areas of application 02
1.2 Measuring principle 02
1.3 Operational safety 03

2. Assambly and installation 03
2.1 Installation instructions 03
2.2 Assembly of the flowmeter 04
2.3 Electrical wiring 05

3. Commissioning 07
3.1 Operation 07
3.2 Functionalities of flowmeter and default settings 08
3.3 Overview of default settings 16
3.4 General Information 16

4. Exchange of measuring device 17

5. Technical specifications 18
5.1 Dimensions and weight 18
5.2 Technical specifications 19

Table of Figures

Fig. 1: Presentation of the principle of ultrasonic flow measuring 02
Fig. 2: Installation position of Flowmeter 03
Fig. 3: Pin code: Connection plug / socket 05
Fig. 4: Pin code: Connection plug / socket 06
Fig. 5: Connecting output 1 to relay 09
Fig. 6: Connecting output 2 to counter 10
Fig. 7: Function of the creeping suppression illustrated with 0.6 l/min 15

General Safety Instructions

Please always observe the following safety instructions!

Please pay attention to the safety instructions with the following pictograms and signal words in these operating instructions :

IMPORTANT! Indicates situations or cases which, if not avoided, could result damage or failure on the used equipment.

WARNING! Indicates general hazardous situations or cases which, if not avoided, could result in serious injury.

Notice : Is used to lead users to helpful information not related to personal injury.

INTENDED USE :

- The Flowmeter may only be used for measuring the flow of pure, homogeneous liquids.
- The volume Flowmeter is manufactured and designed according to the current industry standard EN 61010 (corresponds to VDE 0411 "Safety specifications for electrical measurement, control and laboratory devices").
- The manufacturer cannot be held liable for any damage from inappropriate or unintended use. Conversions and/or changes to the flowmeter may only be made according to these operating instructions.

Personnel for Installation, Commissioning and Operation



- Assembly, electrical installation, commissioning and maintenance of the flowmeter must be carried out by qualified, trained personnel. The qualified personnel must read and understand these operating instructions and must follow all appropriate instructions.
- The installer has to ensure that the flowmeter is correctly connected according to the electrical connection diagrams.

Technological Progress

The manufacturer reserves the right to revise, alter, or modify the flowmeter to the most current technology without special prior notice. Further information about the latest updates and potential additions to these operating instructions are available from the manufacturer.

1. Planning Information

1.1 Areas of application

The flow measurement device in the UltraFlo designed to measure dynamic flow in pipes and tubes. This flow meter is suitable for liquids only. The UltraFlo can be used for the following:

- Chemicals supply for controlling, logistics, monitoring
- Filling machines in food industries
- Cooling systems, logistics, monitoring
- Process equipment for control and monitoring of formulas
- Valve control for continuous release of liquid volumes
- Supply with de-ionized water
- Very dynamic liquid processes with dosing times of below 1 second

UltraFlo has the following features and benefits:

- No movable parts, therefore no wear
- High repeatability
- Easy to clean
- Safe operation
- Compact design
- Integrated detection of empty conduits
- Integrated dosing function with pre-set and adjustable amounts
- Chemical resistant
- Integrated display with keypad

1.2 Measuring principle

The ultrasonic flow measurement is based on the phase-difference approach:
Two ultrasonic-sensors located opposite from each other alternatively transmitting and receiving ultrasonic signals. If there is no liquid flow both sensors receive the transmitted ultrasonic signals in the same phase, i.e. without phase difference. If liquid is flowing there is a phase shift. It differs when measured in direction of the flow than when measured against the direction of the flow. This phase difference is directly proportional to the flow rate.

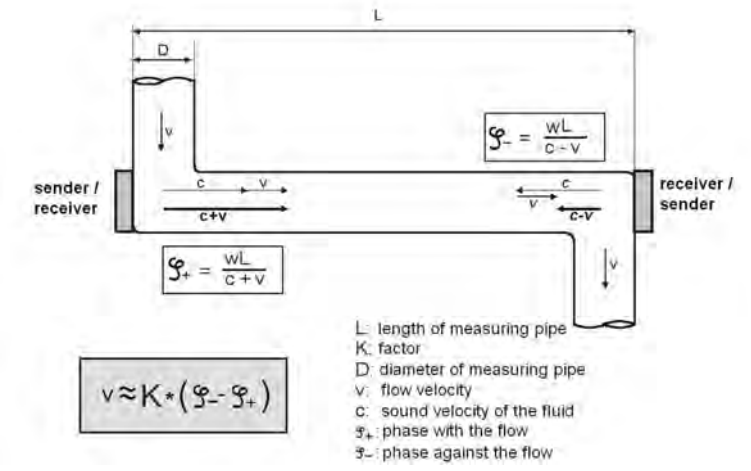

Fig. 1: Presentation of the principle of ultrasonic flow measuring

1.3 Operational safety

Comprehensive self-tests ensure highest possible safety.
Faults (process or system errors) are output on a digital output or displayed on the display menu.

The protection class is IP 67.

Flowmeter meets the general EMC immunity requirements according to CE, EN 61000-6-3, EN 61000-4-2, EN 61000-4-3, EN 61000-4-4, EN 61000-4-5, EN 61000-4-6.

Flowmeter meets the safety requirements concerning the Protective Extra Low Voltage directive according to EN 50178, SELV, PELV.

NOTICE

Note : Flowmeter is available with different connection versions. There are: M12x1 5-pin plug, M12x1 8-pin plug, on request 10-wire Teflon cable (lengths 5m). Depending on the connection configuration not all functions described in this manual are available. The function volume of every flowmeter is described in the function table, chapter "2.3 Electrical wiring" or

2. Assembly and installation

2.1 Installation instructions

The housing of Flowmeter is labeled with an arrow symbolizing the direction of the flow. The flowmeter must be installed in direction of the flow.

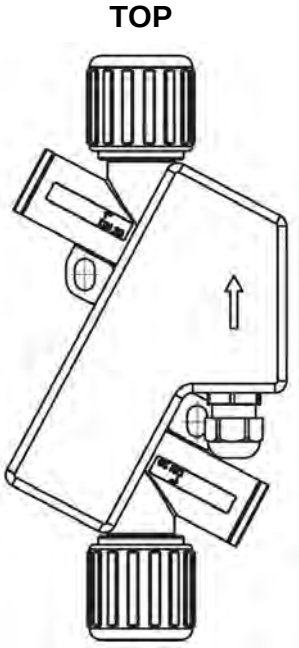

Fig. 2: Installation position of Flowmeter

NOTICE

For fastest possible bubble detection it is important to keep the pipe distance from tank to Flowmeter as short as possible. Accurate measurement can only be assured, if the pipe is completely filled and the liquid does not outgas.

Notwithstanding it may be advantageous for dosing applications to install the Flowmeter as close as possible to the dosing valve, since soft pipes increases the cross-section depending on the system pressure. This may lead to repeatable differences.

Insure that no cavitations dissolve from the measured liquid. Depending on the measured liquid it can be helpful to have enough back pressure on the outlet of Flowmeter to avoid cavitations. Insure all mechanical connections are tight.

Particles present in the flow stream may result in measuring errors.

When using pumps, Flowmeter must be installed in flow direction on the pressure side. The maximum pressure rating of Flowmeter has to be considered.



Do not exceed the maximum pressure allowance for of the Flowmeter (see section 5.2 Technical specifications). Exceed the maximum pressure can lead to destruction of the Flowmeter.

For correct volume flow measurements straight and unobstructed inflow and outflow distances have to be observed. Starting from the connection thread these have to be at least:

Nominal Diameter	DN7 3/8"	DN10 1/2"	DN15 3/4"	DN20 1"
Inflow Distance	5 cm 2.0"	5 cm 2.0"	40 cm 15.8"	60 cm 23.6"
Outflow Distance	0 cm 0.0"	0 cm 0.0"	20 cm 7.9"	20 cm 7.9"

2.2 Assembly of the flowmeter

Flowmeter has two ears with 8 mm x 13 mm elongated holes (for dimensions see section 5. Technical specifications) for attachment to a fixed base. These elongated holes allow attachment to on-site constructions.

2.3 Electrical Wiring

Serious injury or death from electric shock may occur if wiring, installation, disassembly or remove of wires is performed while electrical power is energized.



Always shut off or disconnect electrical power at service panel and lock switch or breaker and tag to prevent energizing electrical power during work or while Flowmeter is not assembled and installed.

Wiring installation, disassembly and removal must be performed by qualified persons experienced and knowledgeable about electrical work.

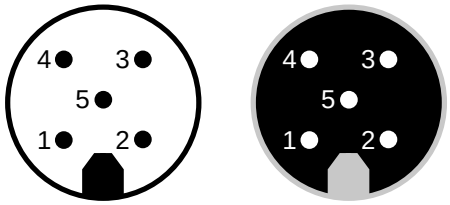

Fig. 3: Pin code: Connection plug / socket

Connector cable pin configuration defined by manufacturer
The outlets may be re-programmed for specific applications

Pin	Function	Description
1	L+	Power supply: 18...30 VDC
2	Pulse output O1 alternative: 1. Empty-pipe output 2. Dosing output 3. Upper or Lower Limit output 4. Negative flow	Digital Output Q1 Freely adjustable ranging from 0.1 to 3000 ml/pulse in 0.1 ml/pulse steps, npn-Transistor, max. load 30V/100mA. Max. Voltage must be less than the supply voltage. Configurable output of 0V or 24V when pipe is empty. Configurable output of 0V or 24V Configurable output of 0V or 24V when reaching upper or lower limit Configurable output of 0V or 24V when liquid flows in negative direction
3	GND	Ground : 0 V
4	Communication	Communication interface
5	Analog output QA	4….20mA ; 0….20mA Example: 0L/min => 4mA 60L/min => 20mA Empty pipe Alert => 3.5mA (4-20mA depending on the configured limits)

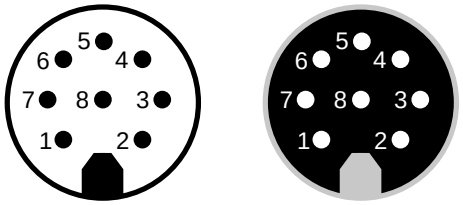

Fig. 4: Pin code: Connection plug / socket

Connector cable pin configuration defined by manufacturer
The outlets may be re-programmed for specific applications.

Pin	Function	Description
1	L+	Power supply: 18...30 VDC
2	Pulse output O1 alternative: 1. Empty-pipe output 2. Dosing output 3. Upper or Lower Limit output 4. Negative flow	Digital Output Q1 Freely adjustable ranging from 0.1 to 3000 ml/pulse in 0.1 ml/pulse steps, npn-Transistor, max. load 30V/100mA. Max. Voltage must be less than the supply voltage. Configurable output of 0V or 24V when pipe is empty. Configurable output of 0V or 24V Configurable output of 0V or 24V when reaching upper or lower limit Configurable output of 0V or 24V when liquid flows in negative direction
3	GND	Ground : 0 V
4	Digital output Q2 Functions: 1. Empty pipe output 2. Dosing output 3. Pulse output 4. Upper or Lower Limit output 5. Negative flow	Digital output Q2 Configurable npn- or pnp-Transistor, max. Load 30V/ 100mA. Max. Voltage must be less than the supply voltage. Configurable output of 0V or 24V when pipe is empty. Configurable output of 0V or 24V Freely adjustable ranging from 0.1 to 3000 ml/pulse in 0.1 ml/pulse steps. Configurable output of 0V or 24V when flow reaches upper or lower limit. Configurable output of 0V or 24V when liquid flows in negative direction.
5	Analog Output QA	4….20mA ; 0….20mA Example: 0L/min => 4mA 60L/min => 20mA Empty pipe Alert => 3.5mA (4-20mA depending on the configured limits)
6	Communication	Communication Interface
7	Digital input I1 1. Dosing output 2. Set offset 3. Reset counter 4. Creeping flow off	Digital input I1 Starts the dosage by a rising edge of 24V. The Offset is set by a rising edge of 24V. Reset of the counter by a rising edge of 24V. Creeping suppression is deactivated as long as there are 24V at the input.
8	Shielding	EMC safety

Attention : Only operate the flowmeter Flowmeter within the operating limits stipulated on the product label and the operating manual / data sheet. Use outside these conditions lead to overloads which cause permanent damage.

3. Commissioning

NOTICE

NOTE : If Flowmeter is used for a fluid other than water the "basic trim" has to be carried out during commissioning. Therefor the device has absolutely be filled with medium.
The basic trim can be done on the device display (alternatively Programmtool). During the adjustment the medium may not flow as it affects the function

3.1 Operation

If Flowmeter is used as volume flowmeter for water or water-like liquids, it will not require on-site calibration. Parameters for water are calibrated at the factory. Notwithstanding the Flowmeter may also be supplied with customized settings. The coordination must be done at time of purchase order.

NOTICE

NOTE : If necessary, e.g. if viscosity and/or speed of sound deviate significantly from water, the pre-set parameters can be adjusted via Programmtool. It is always necessary to adjust the manufacturer pre-set parameters when using the Flowmeter as a dosing device according to section 3.2 (Dosing 1. Flowmeter as a dosing device). Adjusting the manufacturer pre-set parameters requires Programmtool.

The following parameters may be changed to settings suitable for the individual conditions:

- Digital output Q1, function and behaviour
- Digital output Q2*, function and behaviour
- Pulse value
- Analog output QA
- Flow range, for which shall apply 4...20 mA
- Creeping suppression
- Dosing input I1*, function and behaviour
- Optimization of measurement curve with up to 8 interpolation values (media matrix)

Described functions that are marked with * are not available for the 5-pin version. The available functions of 5-pin version are described in the connection table on page 7. To change configurations at Flowmeter a Programmtool is needed.

3.2 Functionalities of flowmeter and default settings

Digital outputs

All outputs switch over to high resistance when the supply is smaller than 18V. When overload or short circuit is detected the digital outputs are switched off after 100µs for a period of 2s. When time is up the outputs get applied again.

Empty pipe output

	Empty pipe	Filled, no flow
0V normal closed	High resistant	0V
0V normal open	0V	High resistant
24V normal closed	High resistant	24V
24V normal open	24V	High resistant

Pulse output

	Empty pipe	Filled, no flow	Filled, flow
0V normal closed	0V	0V	0V Pulses
0V normal open	0V	0V	0V Pulses
24V normal closed	High resistance	High resistance	24V Pulses
24V normal open	High resistance	High resistance	24V Pulses

Upper limit output

	Below lower limit	Between the limits	Above upper limit
0V normal closed	High resistance	High resistance	0V
0V normal open	0V	0V	High resistance
24V normal closed	High resistance	High resistance	24V
24V normal open	24V	0V	High resistance

Lower limit output

	Below lower limit	Betwenn the limits	Above upper limit
0V normal closed	0V	High resistance	High resistance
0V normal open	High resistance	0V	0V
24V normal closed	24V	High resistance	High resistance
24V normal open	High resistance	24V	24V

Dosing output

	Startup of device	While dosing	Before/after dosing
0V normal closed	High resistance	High resistance	0V
0V normal open	High resistance	0V	High resistance
24V normal closed	High resistance	High resistance	24V
24V normal open	High resistance	24V	High resistance

Important! When using the dosing function the output should not be configured as normal closed!
If the dosing output is configured as normal closed the valve will stay open after the

Digital output Q1

Digital output Q1 may be used as pulse output, empty pipe detection, for switching dosing valve or limit control. By using Programmtool the user can switch between npn and pnp-transistor logic. In case of inductive load a diode has to be connected parallel to the coil.

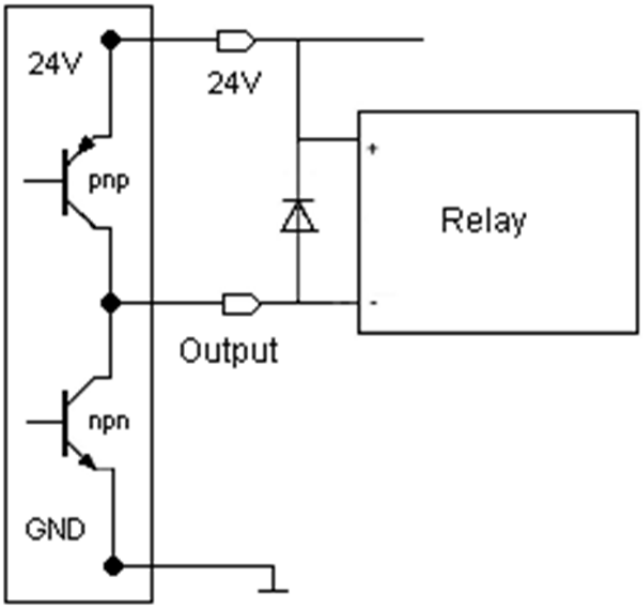

Fig. 5: Connecting output Q1 to relay

Setting area : off, pulse output, empty pipe, dosing output, lower limit, upper limit, negative flow

Digital output Q2*

Digital outputs 2 may be used as pulse output, empty pipe detection, for switching dosing valve, limit control or flow direction control. See chapter 2.3 table connection

The npn or pnp logic can be selected. When the output is connected to an inductive consumer a diode has to be installed parallel to the load.

Flowmeter via pnp, external counter e.g. PLC

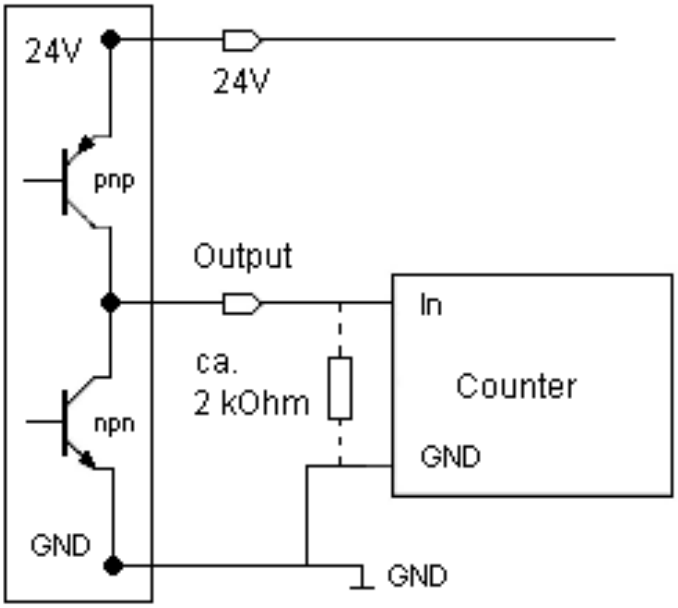

Fig. 6: Connecting output Q2 to counter

Setting area : off, pulse output, empty pipe, dosing output, lower limit, upper limit, negative flow

Important! Inductive load on the digital outputs without an installed diode may cause damage on the Flowmeter electronics. dosing batch.

Dosing function

Dosing can be determined in different ways :

1. Flowmeter as dosing device (dosing control via Flowmeter)

Flowmeter controls the complete dosing function. The dosing quantity (e.g. 400 ml) is pre-set in the Flowmeter via Programmtool. Dosing starts, as soon as line start of dosing is wired to 24 V, e.g. via a pushbutton. Flowmeter will now open the dosing valve via the output configured for it. When the pre-set dosing quantity is reached, the dosing valve is closed via the above output. The second output can be used independently for signalling empty pipe, limit control, pulse output or signalling negative flow.

2. Flowmeter as flowmeter (dosing control via dosing equipment)

The dosing equipment controls the entire dosing function. The dosing quantity is fixed in the dosing equipment control during commissioning by pre-selecting the meter pulses. Dosing starts, when the relevant pushbutton of the dosing equipment is pushed. The control will now open the dosing valve. From now on Flowmeter will send a voltage pulse to the control for each volume unit that has flown through (e.g. per 1ml). When the pre-selected pulse quantity is reached, the control closes the dosing valve. In this case, output 1 is used to send out pulses, output 2 is independently usable for empty pipe detection, limit control or signalling negative flow.



The customer has to provide an emergency stop and an overfilling stop to prevent hazardous situations. Both functions must perform safety shut down of pumps and closing of valves.

Pulse value

This section determines the output settings for pulsed outputs.

Choose configuration such as to neither exceed the maximum output frequency of the Flowmeter (10kHz) nor the maximum input frequency of the control. If the maximum frequency is exceeded the Flowmeter will not output pulses correctly.

Example	2.0 ml/Pulse
This Means	a pulse is emitted every 2.0 ml.
Setting Range	0.1...3000.0 ml/Pulse, in 0.1 ml/Pulse steps
Default Setting	1.0 ml/Pulse

Flow	Pulse value	Frequency	Period	Duration of the Pulse	
ml/s	ml/Pulse	Hz	s	s	ms
1	1	1	1	0.5	500
100	1	100	0.01	0.005	5
1000	0.1	10000	0.0001	0.00005	0.05
100	10	10	0.1	0.05	50
0.5	10	0.05	20	1	50

In the last case every 20 seconds, a pulse of 1 second duration is put out.

Analog output QA

The analog output is available as current output 4-20mA or 0-20mA. This is selected with the purchase order. As standard it comes with current output 4-20mA. It can also be switched off by using Programmtool.

The current output ranges from 0 to 22.6mA measuring the flow rate or the condition of the flow measurement.

The values here signify for 4-20mA configuration :

- 20 mA the upper limit of the relevant measurement
- 4 mA the lower limit of the relevant measurement
- 3.5 mA empty pipe

Upper and lower limit parameters can be set within the type-specific measurement of the device. By default zero flow is set at 4 mA and the maximum flow is set at 20 mA

Setting range	0-20mA, 4-20mA, off
Output value	Flow, Temperature

When current output is used, the load must not be higher than 500Ohm. A higher load prevents the device from providing the maximum current of 22.6mA

Characteristic curves analog output

0 - 20mA

For the following graphic "min Range" is used for 0% and "max Range" is used for 100%.

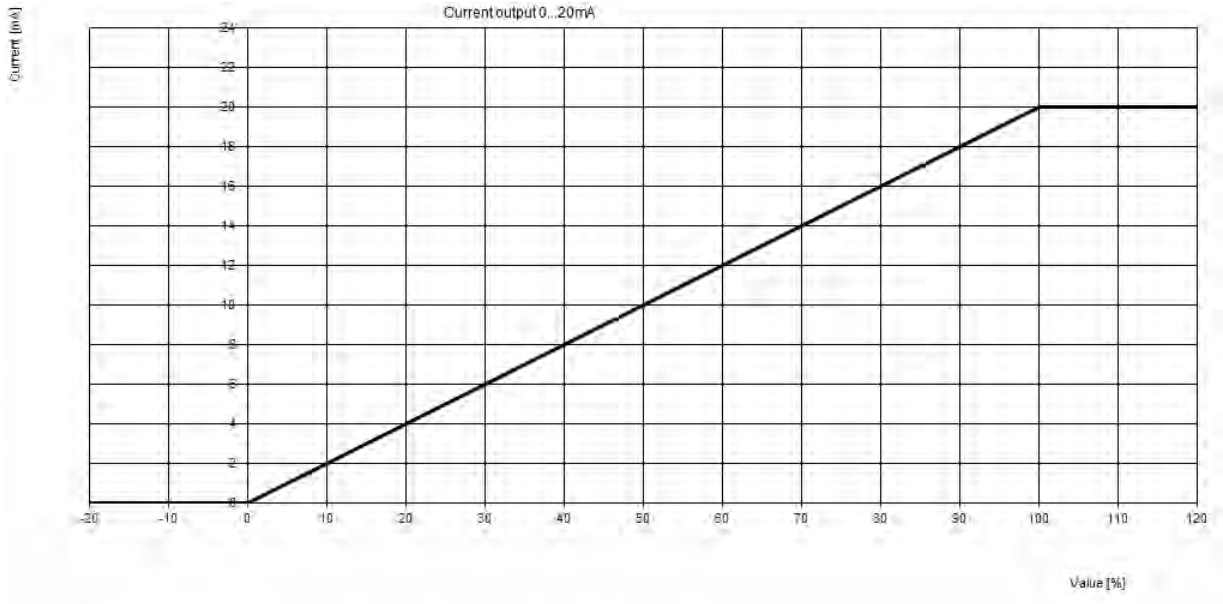

Value	Current [mA]
Smaller 0%	0
0% (min Range)	0
Between 0% and 100%	Linear interpolation from 0 to 20 mA
100% (max Range)	20
Bigger 100%	20

4 - 20mA

For the following graphic "min Range" is used for 0% and "max Range" is used for 100%.

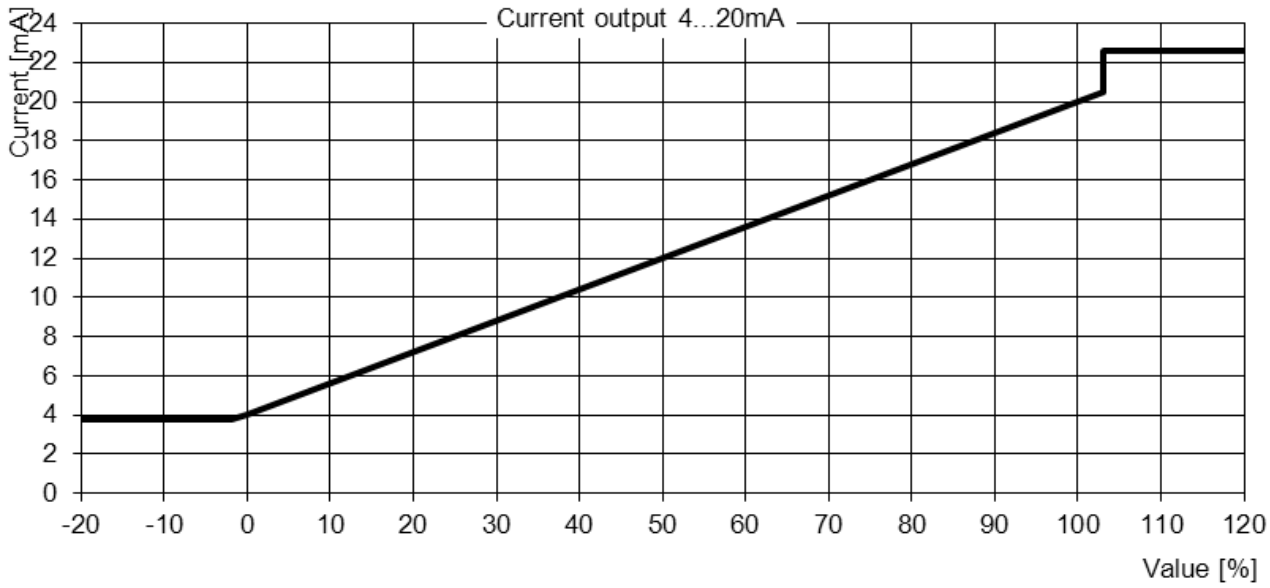

Value	Current [mA]
Empty pipe	3.5
Smaller -1.2%	3.8
Between -1.2% and 0%	Linear interpolation from 3.8 to 4mA
0% (min Range)	4
Between 0% and 100%	Linear interpolation from 4 to 20mA
100% (max Range)	20
Between 100% and 103%	Linear interpolation from 20 to 20.5mA
Bigger 103%	22.6

Filter options for analog output

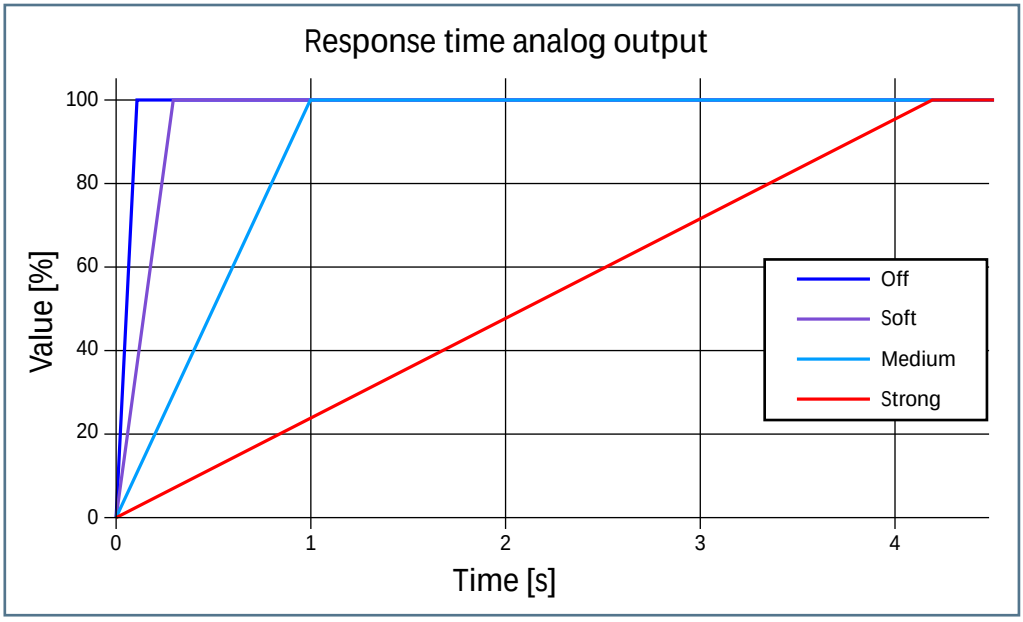

Filter	100%
off	16ms
soft	0.3s
medium	1s
strong	4.2s

Creeping suppression

The creeping suppression excludes flow measurements that result from convection in a narrow band around zero, even with a closed valve. At the factory, the creeping suppression is set at a standard value in relation to the cross-section of the flowmeter.

There are higher tolerances below the standard default settings, see also section 5.2, measurement errors!

Setting range : 0.0...20 l/min, in 0.006 l/min steps
Default settings : 0.09 l/min for DN7 / 3/8", LowFlow option 0.03l/min
0.3 l/min for DN10 / 1/2"
0.9 l/min for DN15 / 3/4"
1.2 l/min for DN20 / 1"

The creeping suppression works with a hysteresis of -25%.

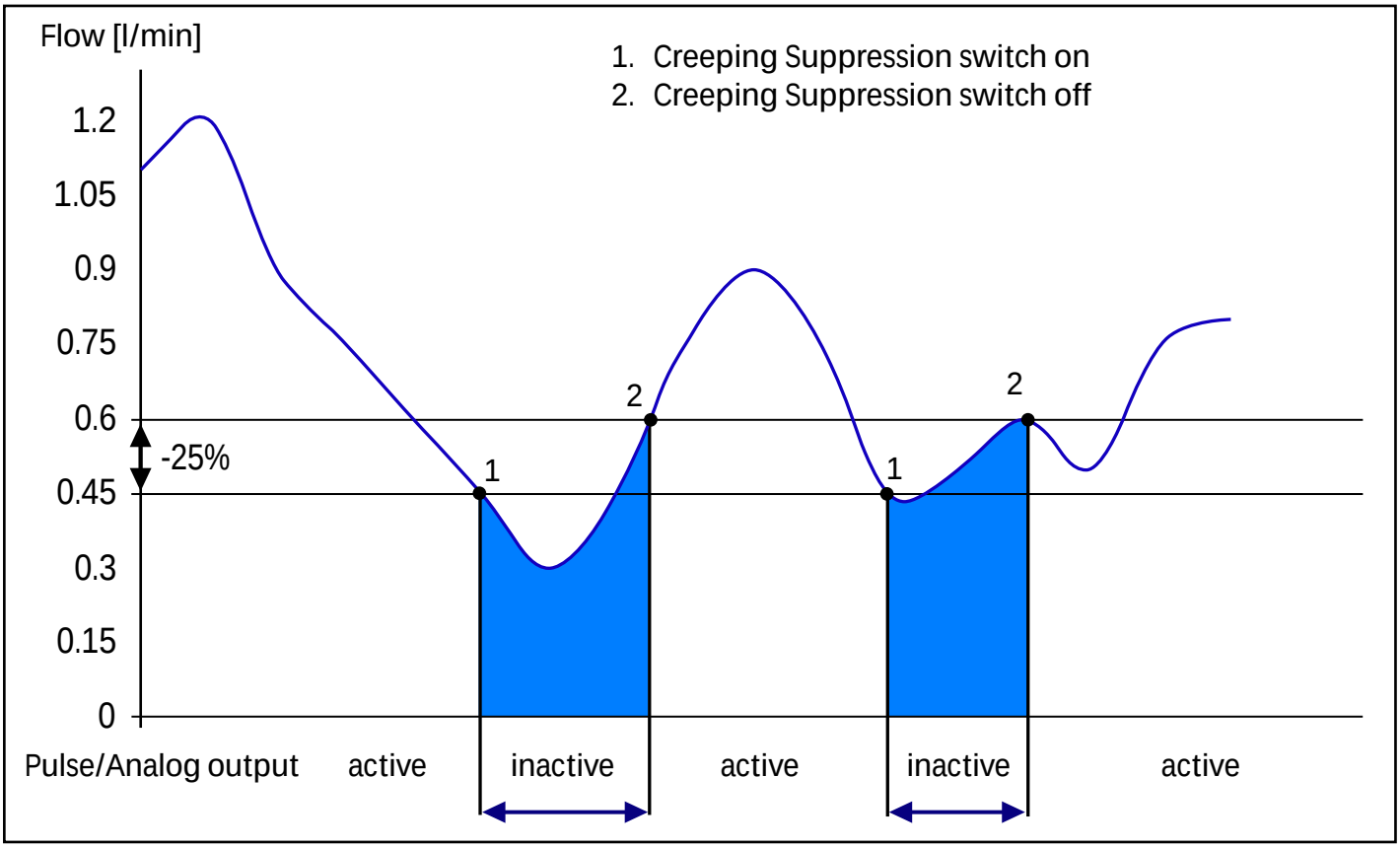

Fig. 7: Function of the creeping suppression illustrated with 0.6 l/min

Example : Creeping suppression = 0.6 l/min
If the flow rate is lower than 0.45 l/min the pulse output/analog output becomes inactive. If the flow rate exceeds 0.6 l/min a pulse is output again and added to the totalizer. Similarly, a value is transmitted to the analog output again.

Digital input I1*

Flowmeter has a digital input that is programmable to following functions: dosing input, set offset, creeping suppression inactive and reset counter. In order to start a dosing process, 24V DC power is required. The status of the dosing parameters is modified with the Programmtool

NOTICE

NOTE : The dosing input is locked so that a re-start is not possible during a running dosing process. After changing configurations via Programmtool a restart of the device is necessary to activate the doing input function.

Available input functions

	Set offset	Creeping flow off	Dosing	Reset counter	off
0V	-	-	-	-	-
24V	Rising edge: 0->24V Set offset	State : deactivating creeping flow	Rising edge: 0->24V start dosing	Rising edge: 0->24 Vcounter is reset	-
	Run only in stationary medium				

The input function "Set Offset" may only be used when there is no flow through the meter. If an offset trim is done while liquid flow is present an offset drift will cause measurement deviations. If the Flowmeter shows an offset drift caused by a wrong offset setting, run the function "Set Offset" or "Basic Trim" again with filled flow meter and no present flow.

3.3 Overview of default settings

Function	Default settings
Digital output Q1	Pulse output as 24V normal open
Digital output Q2*	Empty pipe detection as 24V normal open
Digital input I1*	No function assigned
Analog output QA	Current output
Current output	4-20mA
Measuring range	20mA -> 6 l/min for 3/8" 24 l/min for 1/2" 60 l/min for 3/4" 120 l/min for 1"
Pulse value	1 ml/pulse
Creeping suppression	0.09 l/min for 3/8", 0.03l/min LowFlow 0.3 l/min for 1/2" 0.9 l/min for 3/4" 1.2 l/min for 1"

3.4 General Information

Please check the following before powering the flowmeter for the first time:

- Check the electrical connections and cable allocations
- Check the installation position of the flowmeter. Are the direction of the arrow on the name plate and the actual flow direction in the pipe congruent?
- Is the measurement pipe completely filled with fluid?

When everything has been checked, switch on power. After 30 minutes with power running the measuring device reaches the maximum accuracy.

Now, Flowmeter is operational!

4. Exchange of Measuring Device



- Switch off power before disconnecting the electrical connections!
- Wiring installation, disassembly and removal must be performed by qualified persons experienced and knowledgeable about electrical work.
- Serious injury or death from electric shock may occur if wiring, installation, disassembly or remove of wires is performed while electrical power is energized
- Please note that after replacing the flowmeter

a) the programming of the previous flowmeter should be saved and copied on the new flowmeter
b) when using the dosing function, set a quantity

If the device requires a configuration change, the display and programming unit Programmtool is required.

Repair, Hazardous Substances

Before sending the flowmeter Flowmeter for repair, the following precautions must be taken:



Clean all process chemicals from the device. Fully rinse the flow path. Please pay close attention to the process fittings. All media must be removed before returning. This is particularly important, if the medium to be measured is health hazardous.

Devices judged to be insufficiently cleaned will be returned to sender. No inspection of device will be done until proper cleaning is completed by user.

Costs due to inadequate cleaning of the instrument for possible disposal or injury (burns, etc.) will be charged to the sender of the meter into account.



With the flowmeter send a detailed report describing the failure, the application and the physical-chemical properties of the medium parameters. (e.g. a decontamination declaration).

In order to be able to process your repair order quickly and smoothly it is important that you provide a technical contact person including phone and fax number as well as e-mail address.

5. Technical specifications

5.1 Dimensions and weight

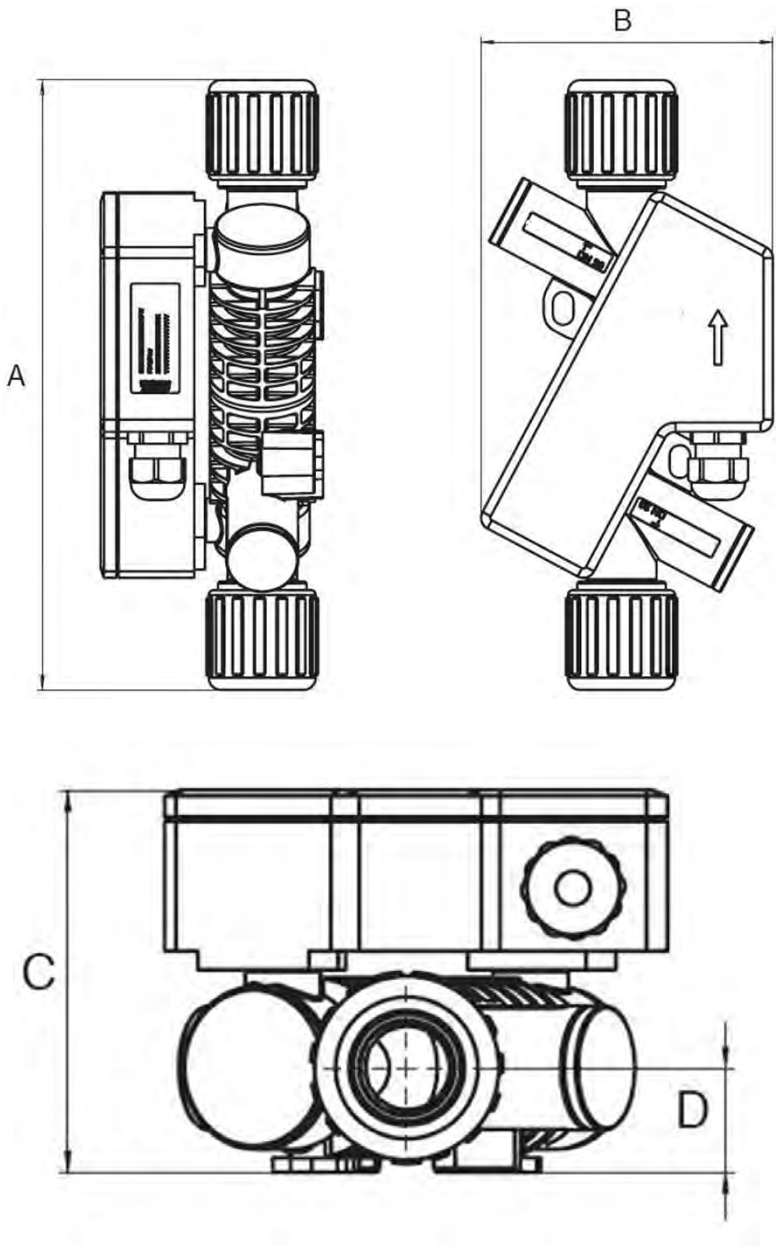

Nominal width	Length A [mm]	Width B [mm]	Height C [mm]	Height of axis D [mm]	Weight [kg]
DN7 3/8"	218.0	120.0	79.0	16	1.1
DN10 1/2"	219.5	120.0	79.0	16	1.1
DN15 3/4"	227.0	120.0	82.0	19	1.1
DN20 1"	251.0	120.0	91.5	25	1.3

5.2 Technical Specifications

Housing

Nominal diameters	DN7 - 3/8", DN10 - 1/2",DN15 - 3/4", DN20 - 1"
Connection	Flare
Medium temperature	0...+80°C
Protection class	IP 65
Pressure nominal	PN 6
Material	All parts in contact with medium made of PFA Flare nut : PVDF or PFA Electronics housing : PP

Electronics

Power supply	18...30VDC, 3.6W
Connection	plug 5 pins, plug 8 pins, 10-wire Teflon cable (5m)
Ambient temperature	-20....+60°C
Current output QA	0/4...20 mA Lower- and upper limit adjustable, Ground connected to supply ground Error Signal according to NAMUR NE43
Digital output Q1 /2	via transistor npn- and pnp-logic max. 30V/100mA output voltage according to DIN 19240: ≤ 5V means LOW ≥ 12V means HIGH Short cut resistant Frequency 0....10kHz
Data interface	± 2% of reading ± 3 mm/s Option: ± 1% of reading ± 3 mm/s Reference conditions (VDE/VDI 2642)
Measuring ranges*	3/8": 0.09…6 l/min, 0.03…6 l/min Low Flow 1/2": 0.3…24 l/min 3/4": 0.9…60 l/min 1" : 1.2…120 l/min
Repeatability:	0.5%

The measuring system Flowmeter meets the general EMC immunity requirements according to CE, EN 61000-6-3, EN 61000-4-2, EN 61000-4-3, EN 61000-4-4, EN 61000-4-5, EN 61000-4-6. It is in conformity with the requirements of the EC directives and has the CE label.

*The flow range limits correspond to a flow speed of ~3m/s with Flowmeter of size 3/8", ~6m/s with Flowmeter of sizes ½", ¾" und 1"

Behavior of the Temperature Sensor

The integrated temperature sensor has no direct contact to the liquid and is used to calculate the expansion of the housing. The environment temperature greatly influences the actual temperature of the temperature sensor. The response time of temperature changes relates to the mounting position of the temperature sensor inside the housing.

Step-Response Time

Step-response time after a significant temperature change. (Filter "Off")

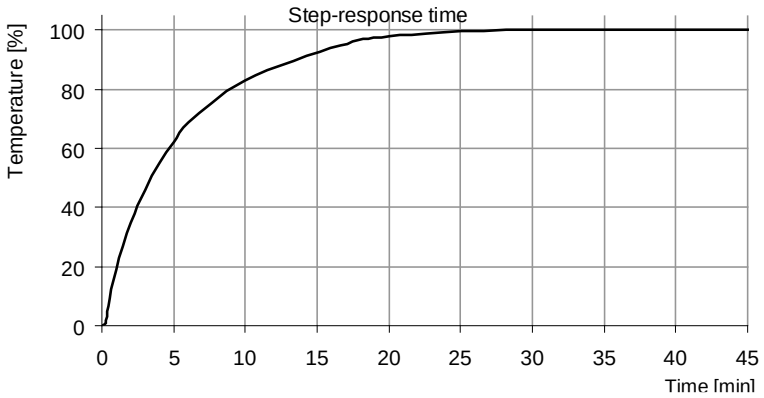

Filter Configurations for Temperature Sensor

Filter	100%
Off	1s
Soft	16s
Medium	1min
Strong	4min

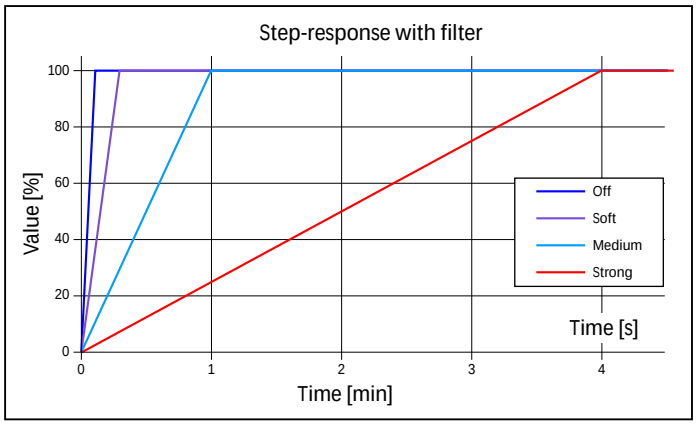

Influence of the environment temperature
In the table below some examples of the temperature influence are shown.

Liquid Temp	X	0.7	+	Environment temp.	X	0.3	=	Measured temp.
40	X	0.7	+	20°C	X	0.3	=	34°C
40	X	0.7	+	20°C	X	0.3	=	37°C
40	X	0.7	+	20°C	X	0.3	=	40°C
60	X	0.7	+	20°C	X	0.3	=	48°C

In case of an error :
In case of a short circuit of the temperature sensor -50°C are shown.
In case of a cable brake between temperature sensor and electronic -30°C are shown.