Flowmeter Ultrasonic Flow Metering / Dosing Device

Operating Manual

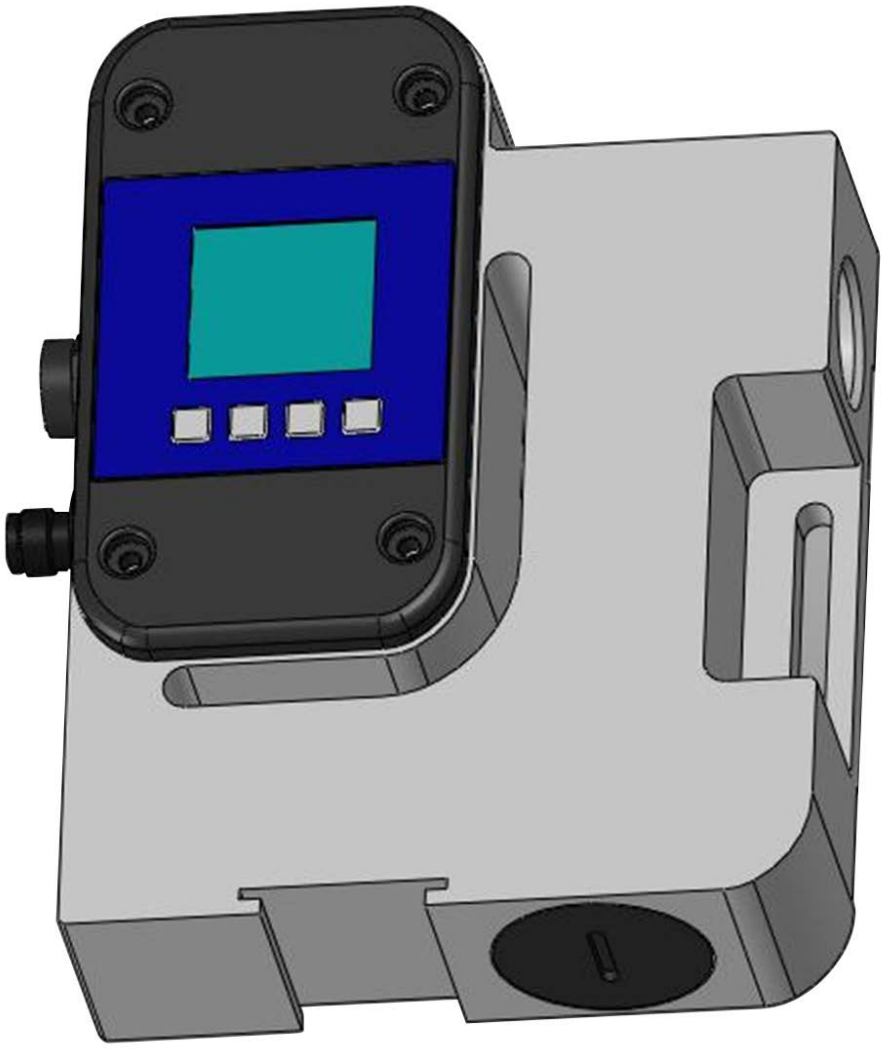

Read the user's manual carefully before starting to use the unit or software.
Producer reserves the right to implement changes without prior notice.

Table of Contents

General safety instructions 01

1. Planning information 02
1.1 Areas of application 02
1.2 Measuring principle 02
1.3 Operational safety 03

2. Assambly and installation 03
2.1 Installation instructions 03
2.2 Assembly of the flowmeter 04
2.3 Electrical wiring 07

3. Commissioning 09
3.1 Operation 09
3.2 Functionalities of flowmeter and default settings 13
3.3 Overview of default settings 23
3.4 General Information 23

4. Exchange of measuring device 23

5. Technical specifications 25
5.1 Dimensions and weight 25
5.2 Technical specifications 26

Table of Figures

Fig. 1: Presentation of the principle of ultrasonic flow measuring 02
Fig. 2: Installation position of Flowmeter 03
Fig. 3: Mounting examples for Flowmeter 05
Fig. 4: Mounting possibilities 05
Fig. 5: Fixing Flowmeter 06
Fig. 6: Flowmeter mounted on a DIN rail 06
Fig. 7: Pin code: Connection plug / socket for 5-pin version 07
Fig. 8: Pin code: Connection plug / socket for 8-pin version 08
Fig. 9: Operating with the key pad 10
Fig. 10: Menu organization for 5-pin version 11
Fig. 11: Menu organization for 8-pin version 12
Fig. 12: Function of the creeping suppression illustrated with 0.6 l/min 15
Fig. 13: Connecting output Q1 to relay 20
Fig. 14: Connecting output Q2 to counter 21

General Safety Instructions

Please always observe the following safety instructions!
Please pay attention to the safety instructions with the following pictograms and signal words in these operating instructions:

IMPORTANT! indicates situations or cases which, if not avoided, could result in damage or failure of the Flowmeter 44i equipment.

WARNING! Iindicates general hazardous situations or cases which, if not avoided, could result in serious injury or death.

NOTICE **Is used to lead users to helpful information not related to personal injury.**

Intended Use :

- The flow meter Flowmeter may only be used for measuring the flow of pure, homogeneous liquids.
- The Flowmeter is not intended for use in medical applications.
- The volume flow meter Flowmeter is built operationally safe in accordance with the latest state of the art technologized developments and industry standard EN 61010 regulations (corresponds to VDE 0411 "Safety specifications for electrical measurement, control and laboratory devices").
- The manufacturer is not liable for any injury, damage or harm due to inappropriate or unintended use or modifications of the flow meter. Conversions and/or changes to the flow meter may only be made, if they are expressly performed in accordance with the operating instructions in this operating manual.

Personnel for Installation, Commissioning and Operation

WARNING!

- Assembly, electrical installation, commissioning and maintenance of the flow meter must be carried out by qualified, trained personnel. The qualified personnel must have read and understood the operating instructions in this operating manual and must follow the operating instructions in this manual.
- The installer has to ensure that the flow meter is correctly connected according to the electrical connection diagrams in this operating manual.
- Serious injury or death from electric shock may occur if wiring, installation, disassembly or remove of wires is performed while electrical power is energized

Technological Progress

The manufacturer reserves the right to revise, alter, or modify the flow meter to the most current technology without special prior notice. Further information about the latest updates and potential additions to these operating instructions are available from the manufacturer.

1. Planning Information

1.1 Areas of application

The flow measurement device in the Flowmeter designed to measure dynamic flow in pipes and tubes. This flow meter is suitable for liquids only. The Flowmeter is used in

- Chemicals supply for controlling, logistics, monitoring
- Cooling systems, logistics, monitoring
- Process equipment for control and monitoring of formulas
- Valve control for continuous release of liquid volumes
- Supply with de-ionized water
- Very dynamic liquid processes with dosing times of below 1 second

Flowmeter has the following features and benefits:

- No movable parts, therefore no wear
- High repeatability
- Easy to clean
- Safe operation
- Compact design
- Integrated detection of empty conduits
- Integrated dosing function with pre-set and adjustable amounts
- Chemical resistant
- Constant pipe cross-section over the entire measurement channel

1.2 Measuring principle

It usually takes more energy to swim against the flow than with the flow. The ultrasonic flow measurement is based on the phase-difference approach:
Two ultrasonic-sensors located opposite from each other alternatively transmitting and receiving ultrasonic signals. If there is no liquid flow both sensors receive the transmitted ultrasonic signals in the same phase, i.e. without phase difference. If liquid is flowing there is a phase shift. It differs when measured in direction of the flow than when measured against the direction of the flow. This phase difference is directly proportional to the flow rate.

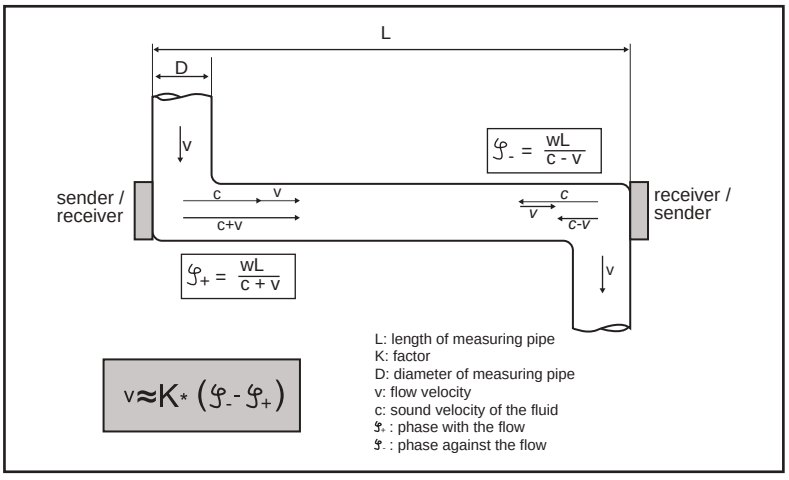

Fig. 1: Presentation of the principle of ultrasonic flow measuring

1.3 Operational Safety

Comprehensive self-tests ensure highest possible safety.
Faults (process or system errors) are output on a digital output or displayed on the display menu.

The protection class is IP 67.

Flowmeter meets the general EMC immunity requirements according to CE, EN 61000-6-3, EN 61000-4-2, EN 61000-4-3, EN 61000-4-4, EN 61000-4-5, EN 61000-4-6.

Flowmeter meets the safety requirements concerning the Protective Extra Low Voltage directive according to EN 50178, SELV, PELV.

2. Assembly and Installation

2.1 Installation instructions

The housing of Flowmeter is labeled with an arrow symbolizing the direction of the flow. The flowmeter must be installed in direction of the flow.

NOTICE

The nameplate of the Flowmeter has an arrow, symbolizing the flow direction of measurement. The flow meter has to be installed in a way so that the flow-through is in the same direction as the arrow symbol.

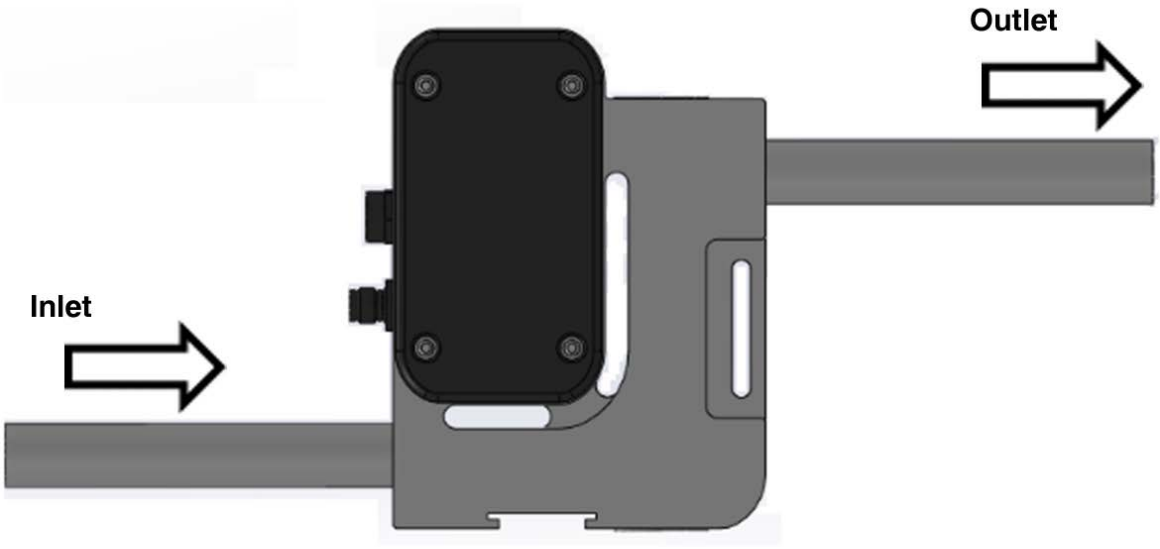

Fig. 2: Installation position of flowmeter

For fastest possible bubble detection it is important to keep the pipe distance from tank to Flowmeter as short as possible. Accurate measurement can only be assured, if the pipe is completely filled and the liquid does not outgas.

Notwithstanding it may be advantageous for dosing applications to install the Flowmeter as close as possible to the dosing valve, since soft pipes increases the cross-section depending on the system pressure. This may lead to repeatable differences.

NOTICE

Insure that no cavitations dissolve from the measured liquid. Depending on the measured liquid it can be helpful to have enough back pressure on the outlet of Flowmeter to avoid cavitations. Insure all mechanical connections are tight.

Particles present in the flow stream may result in measuring errors.

When using pumps, Flowmeter must be installed in flow direction on the pressure side, on order to ensure sufficient pressure. The maximum pressure rating of Flowmeter has to be considered.



Do not exceed the maximum pressure allowance for of the Flowmeter (see section 5.2 Technical specifications). Exceed the maximum pressure can lead to destruction of the Flowmeter.

For correct volume flow measurements straight and unobstructed inflow and outflow distances have to be observed. Starting from the connection thread these straight and unobstructed flow zones must be:

Nominal Diameter	DN 5	DN 7	DN 10	DN 15
Inflow distance	0cm	0cm	5cm	40cm
Outflow distance	0cm	0cm	0cm	20cm

2.2 Assembly of the flow meter

NOTICE

The flow meter is mounted into a pipe system by using the mechanical connection. Flowmeter should be mounted vertically into the pipe for the best measuring performance. Do not install the flow meter after a dosing valve where the flow meter can run empty. Placing the flow meter after a dosing valve and allowing it to run empty will cause a measuring deviation at the next measurement. To avoid bubbles in the liquid, Flowmeter should be installed on the pressure side of the pump.

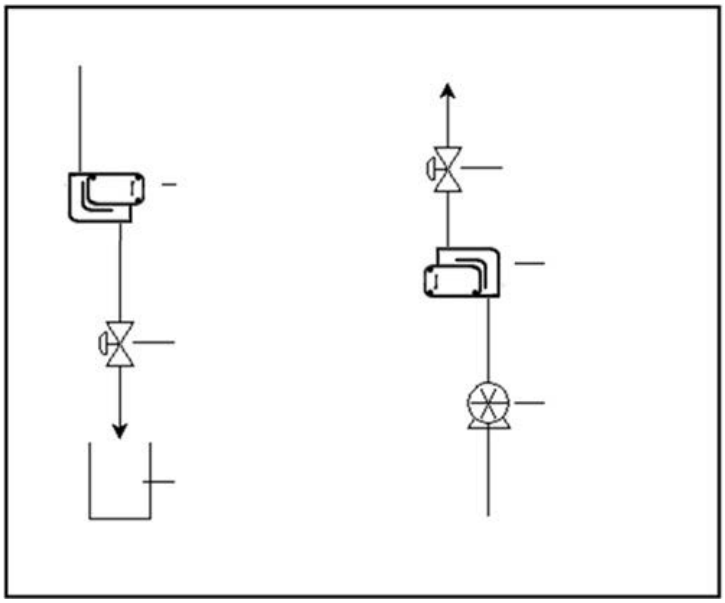

Fig. 3: Mounting examples for Flowmeter

If it is not possible to mount the flow meter vertically, then mount the instrument in a location where the pipe will be filled at all times. The best measuring result is achieved if bubbles do not pass through Flowmeter.

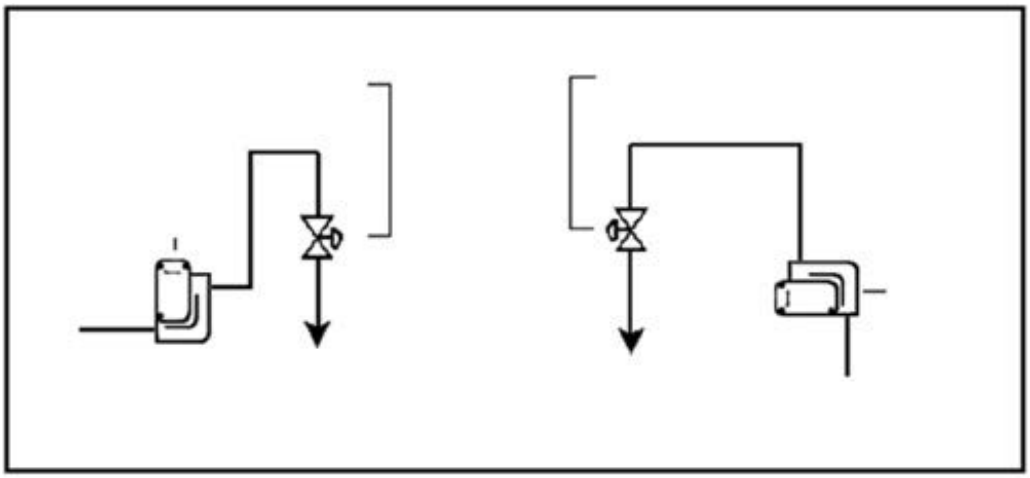

Fig. 4: Mounting possibilities

For applications with a "clean design" for which it is necessary to completely drain the pipe system, we recommend mounting the flow meter in the vertical position. Residual liquid may remain inside the device if flow meter is mounted horizontally.

Vibrations or mechanical forces may decrease measuring accuracy. So if there is due to vibration or mechanical movements is necessary to fix Flowmeter additionally, the instrument can be either mounted on a DIN rail, or be fixed on the lateral slot.

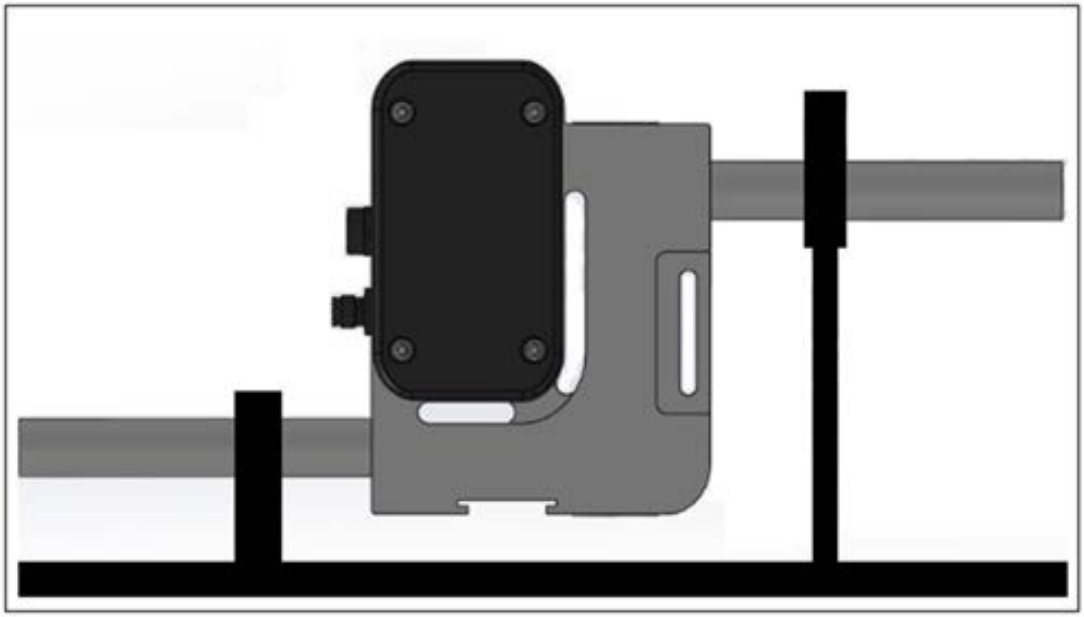

Fig. 5: Fixing Flowmeter

Flowmeter must be installed without mechanical tensions on the existing pipe system. The flow meter may be damaged if there is tension on the existing pipe system.

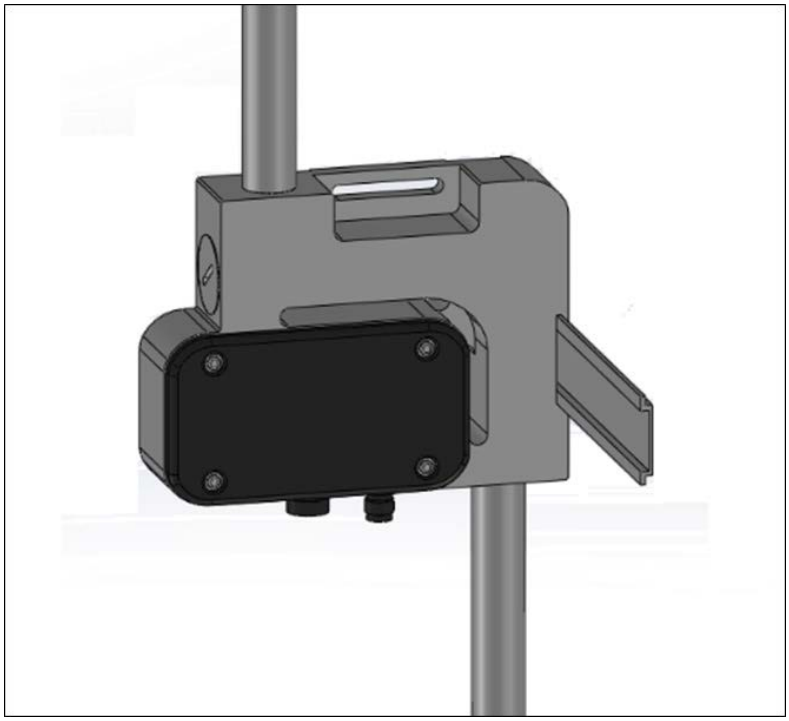

Fig. 6: Flowmeter mounted on a DIN rail

Non-compliance of the installation instructions may result in tearing of the housing, liquid may leak out.

2.3 Electrical Wiring

Serious injury or death from electric shock may occur if wiring, installation, disassembly or remove of wires is performed while electrical power is energized.



Always shut off or disconnect electrical power at service panel and lock switch or breaker and tag to prevent energizing electrical power during work or while Flowmeter is not assembled and installed.

Wiring installation, disassembly and removal must be performed by qualified persons experienced and knowledgeable about electrical work.

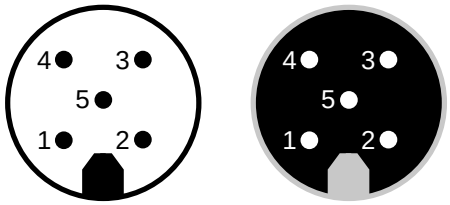

Fig. 7: Pin code: Connection plug / Socket

Connector cable pin configuration defined by manufacturer
The outlets may be re-programmed for specific applications

Pin	Function	Description
1	L+	Power supply: 18...30 VDC
2	Pulse output O1 alternative: 1. Empty-pipe output 2. Dosing output 3. Upper or Lower Limit output 4. Negative flow	Digital Output Q1 Freely adjustable ranging from 0.1 to 3000 ml/pulse in 0.1 ml/pulse steps, npn-Transistor, max. load 30V/100mA. Max. Voltage must be less than the supply voltage. Configurable output of 0V or 24V when pipe is empty. Configurable output of 0V or 24V Configurable output of 0V or 24V when reaching upper or lower limit Configurable output of 0V or 24V when liquid flows in negative direction
3	GND	Ground : 0 V
4	Communication	Communication interface
5	Analog output QA	4….20mA ; 0….20mA Example: 0L/min => 4mA 60L/min => 20mA Empty pipe Alert => 3.5mA (4-20mA depending on the configured limits)

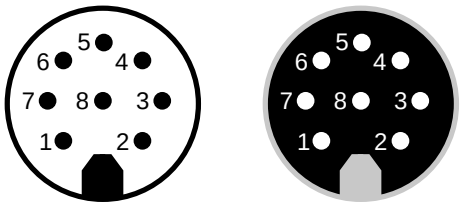

Fig. 8: Pin code: Connection plug / socket

Connector cable pin configuration defined by manufacturer
The outlets may be re-programmed for specific applications.

Pin	Function	Description
1	L+	Power supply: 18...30 VDC
2	Pulse output O1 alternative: 1. Empty-pipe output 2. Dosing output 3. Upper or Lower Limit output 4. Negative flow	Digital Output Q1 Freely adjustable ranging from 0.1 to 3000 ml/pulse in 0.1 ml/pulse steps, npn-Transistor, max. load 30V/100mA. Max. Voltage must be less than the supply voltage. Configurable output of 0V or 24V when pipe is empty. Configurable output of 0V or 24V Configurable output of 0V or 24V when reaching upper or lower limit Configurable output of 0V or 24V when liquid flows in negative direction
3	GND	Ground : 0 V
4	Digital output Q2 Functions: 1. Empty pipe output 2. Dosing output 3. Pulse output 4. Upper or Lower Limit output 5. Negative flow	Digital output Q2 Configurable npn- or pnp-Transistor, max. Load 30V/ 100mA. Max. Voltage must be less than the supply voltage. Configurable output of 0V or 24V when pipe is empty. Configurable output of 0V or 24V Freely adjustable ranging from 0.1 to 3000 ml/pulse in 0.1 ml/pulse steps. Configurable output of 0V or 24V when flow reaches upper or lower limit. Configurable output of 0V or 24V when liquid flows in negative direction.
5	Analog Output QA	4….20mA ; 0….20mA Example: 0L/min => 4mA 60L/min => 20mA Empty pipe Alert => 3.5mA (4-20mA depending on the configured limits)
6	Communication	Communication Interface
7	Digital input I1 1. Dosing output 2. Set offset 3. Reset counter 4. Creeping flow off	Digital input I1 Starts the dosage by a rising edge of 24V. The Offset is set by a rising edge of 24V. Reset of the counter by a rising edge of 24V. Creeping suppression is deactivated as long as there are 24V at the input.
8	Shielding	EMC safety

Attention : Only operate the flow meter Flowmeter44i within the operating limits stipulated on the product label and the operating manual / data sheet. Use of the Flowmeter 44i outside these conditions will lead to overloads which cause permanent damage.

3. Commissioning

NOTICE

NOTE : If Flowmeter is used for a fluid other than water the "basic trim" has to be carried out during commissioning. Therefor the device has absolutely be filled with medium.
The basic trim can be done on the device display (alternatively Programmtool). During the adjustment the medium may not flow as it affects the function

3.1 Operation

If Flowmeter is used as a volume flow meter for water or water-like liquids it will not require on-site calibration. Parameters for water are calibrated at the factory. The Flowmeter 44i may also be ordered with customized settings, but customized settings must be requested when Flowmeter is ordered.

NOTICE

NOTE : If necessary, e.g. if viscosity and/or speed of sound deviate significantly from water, the pre-set parameters can be adjusted via Programmtool. It is always necessary to adjust the manufacturer pre-set parameters when using the Flowmeter as a dosing device according to section 3.2 (Dosing 1. Flowmeter as a dosing device). Adjusting the manufacturer pre-set parameters requires Programmtool.

The following parameters may be changed to settings suitable for the individual conditions: for 5-pin version

- Digital output Q1, function and behavior
- Analog output QA, function and behavior
- Flow range, for which shall apply 4...20 mA
- Pulse value
- Creeping suppression
- Optimization of measurement curve with up to 8 interpolation values (medium matrix)

The following parameters may be changed to settings suitable for the individual conditions: for 8-pin version

- Digital output Q1, function and behavior
- Digital output Q2, function and behavior
- Digital input I1, function and behavior
- Analog output QA, function and behavior
- Flow range, for which shall apply 4...20 mA
- Pulse value
- Creeping suppression
- Optimization of measurement curve with up to 8 interpolation values (medium matrix)

Display and user menu

Flowmeter is equipped with a display to visualize actual measurement values and to change parameters of the flow meter. Menu navigation and parameter changes are controlled by the four keys on the keypad.

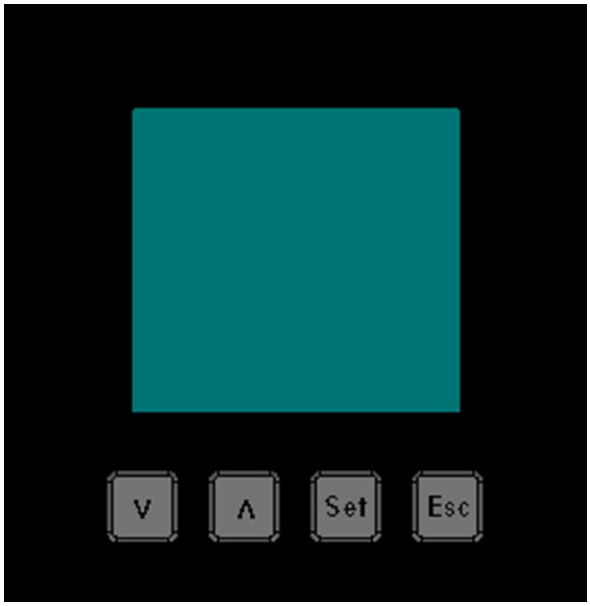

Fig. 9: Operating with the key pad

Press the "Set" key to display the main menu. Different menu options can be selected by using the two arrow keys.
To enter e.g. analog limits "Analog output - Upper limit" use the arrow keys to change values and press "Set" to confirm. To switch back to the last menu level press the "Esc" key. As soon as the operator tries to change values the user will be prompted to enter a password. Password protection is used to ensure changes to values or configurations are done by authorized personnel. The default password for Flowmeter is **41414**. The password can be changed with Programmtool. The user level will remain active for 5 minutes after the last press on any button.

The Password should only be shared with personnel authorized to make changes to setting.

NOTICE

NOTE : Always the first parameter of the menu appears in the display.This need not be the adjusted enabled parameter. The enabled parameter appears inverted and possibly visible by scrolling.

NOTICE

NOTE : Functions marked with asterisk (*) are only available for the Flowmeter 8-pin version. Flowmeter without user display supports the same functions as the display-version. The display and programming unit Programmtool is needed to change configurations of Flowmeter without user display.

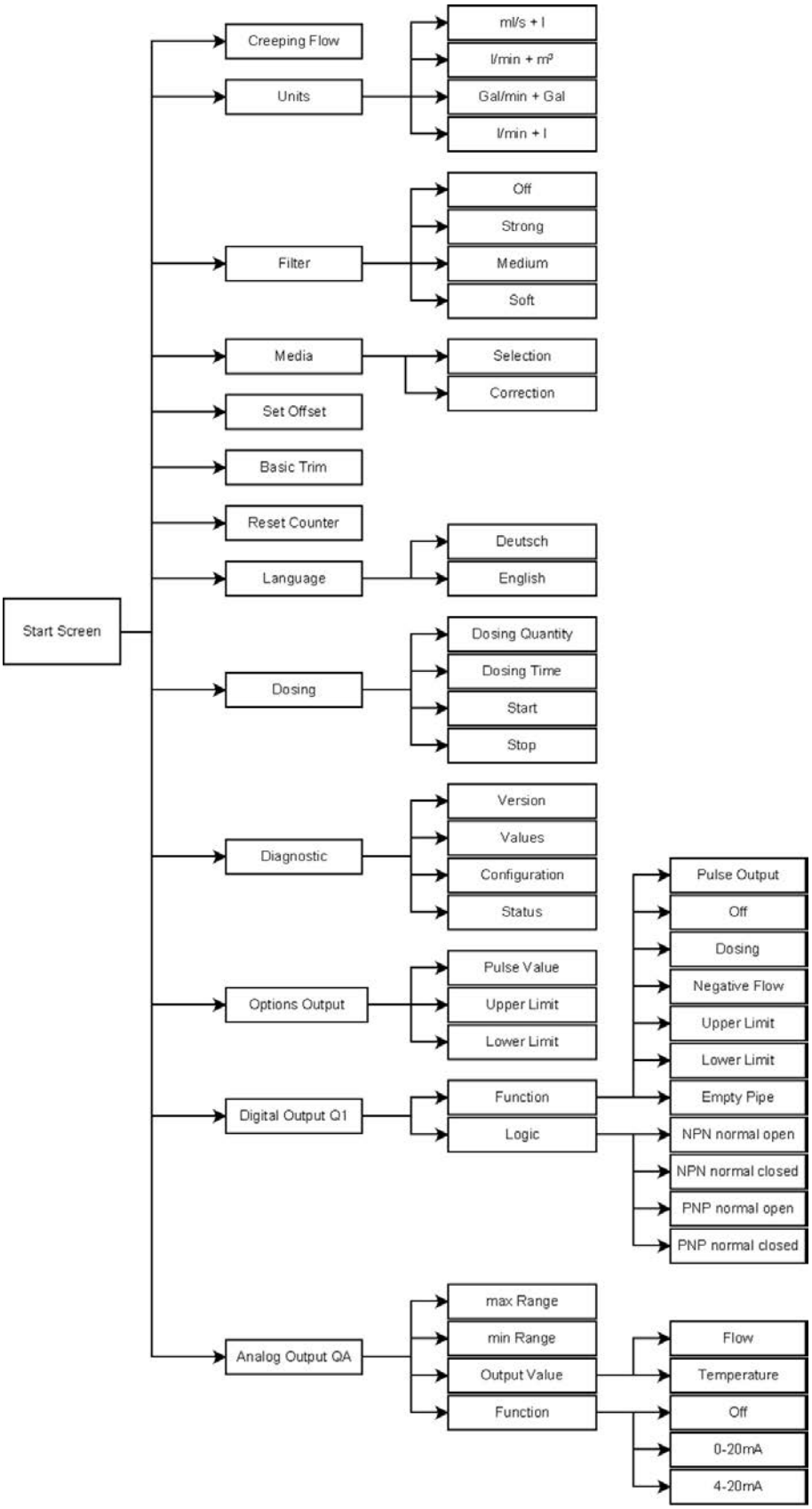

Fig. 10: Menu organization for 5-pin version

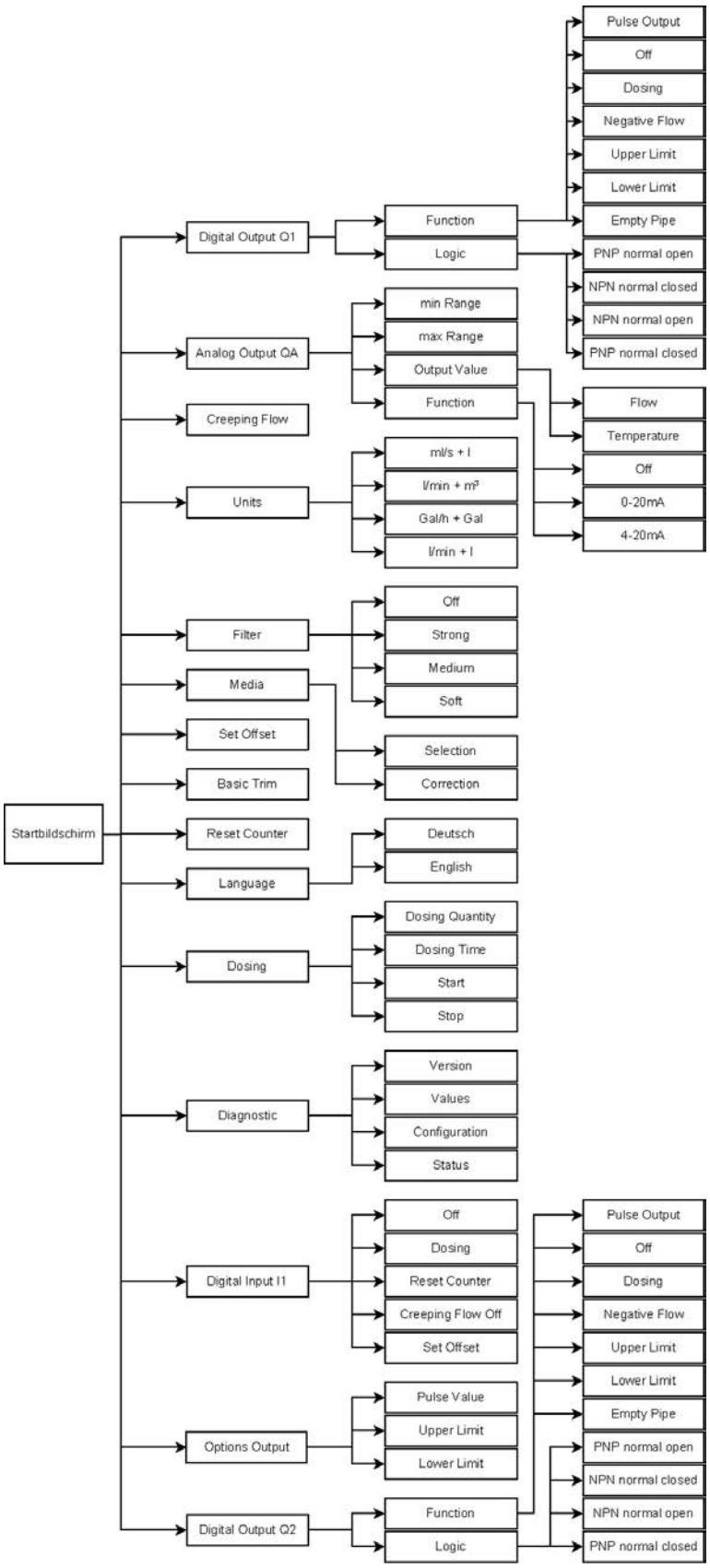

Fig. 11: Menu organization for 8-pin version

3.2 Functionalities of flow meter and default settings

Set Offset

In the sub menu "Set Offset" it is possible to set the actual offset of the flow meter. Use this function only when Flowmeter is completely filled with liquid, and there is no flow. If the offset is set while flow is present or when the pipe is empty it will cause an offset drift what results in a faulty measurement. Example of operation see appendix.

A small offset change, e.g. caused by variable temperatures, is automatically done by the flow meter. It is also possible to set the offset via the configurable digital inputs.

Language

The language of the display can be changed. Available languages are English and German.

Filter

The function "Filter" averages the analog output signal. Possible settings: Soft, Medium, Strong, Off

The analog output signal reacts faster to signal changes when average determination is set to "soft". Whereas the analog output signal reacts slower when average determination is set to "strong".

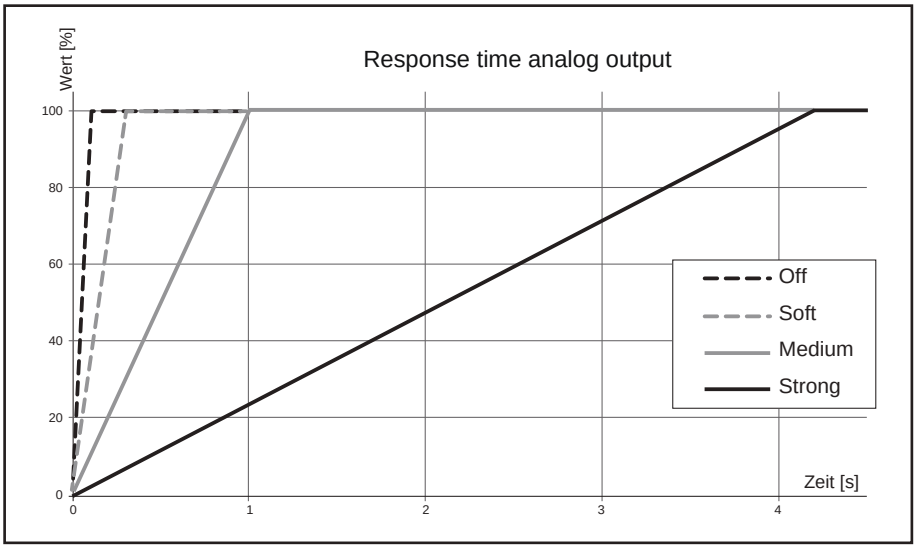

Filter	100%
off	16ms
soft	0,3s
medium	1s
strong	4,2s

Units

Flowmeter is able to show actual flow or the volume in different units. Following units can be selected:
ml/s + l , Gal/min +Gal , l/min + l , l/min + m^3.

The first letters correspond to the unit of the flow value. The letters after the + correspond to the unit of the volume value.

Reset Counter

The volume counter of Flowmeter can be reset. Example of operation see appendix

Important! : Once reset, counter values cannot be restored. After a reset the counter works normally.

Basic Trim

NOTICE

NOTE : The "Basic Trim" function insures that the flow meter is conforming to the media specific characteristics. To execute this function, Flowmeter runs a self-diagnostic function which optimizes all important parameters. This process lasts approximately 1 minute.

Important! : To make sure the basic trim is correctly done, the flow meter has to be filled with liquid without a flow.
When there is an error detected while performing the basic trim function, the display shows "Error". After successfully finishing the basic trim function, the display will show "Done"

Creeping suppression

The creeping suppression excludes flow measurements that result from convection in a narrow band around zero, even with a closed valve. At the factory, the creeping suppression is set at a standard value in relation to the cross-section of the flow meter. Changes to a smaller value of the parameter may cause an offset drift what results in a faulty measurement.

There are higher tolerances below the standard default settings, see also section 5.2 measurement errors!

Setting range : 0.0...20 l/min, in 0.006 l/min steps
Default settings : 0.024 l/min for DN 5
0.09 l/min for DN 7
0.3 l/min for DN10
0.9 l/min for DN15

The creeping suppression works with a hysteresis of - 25%.

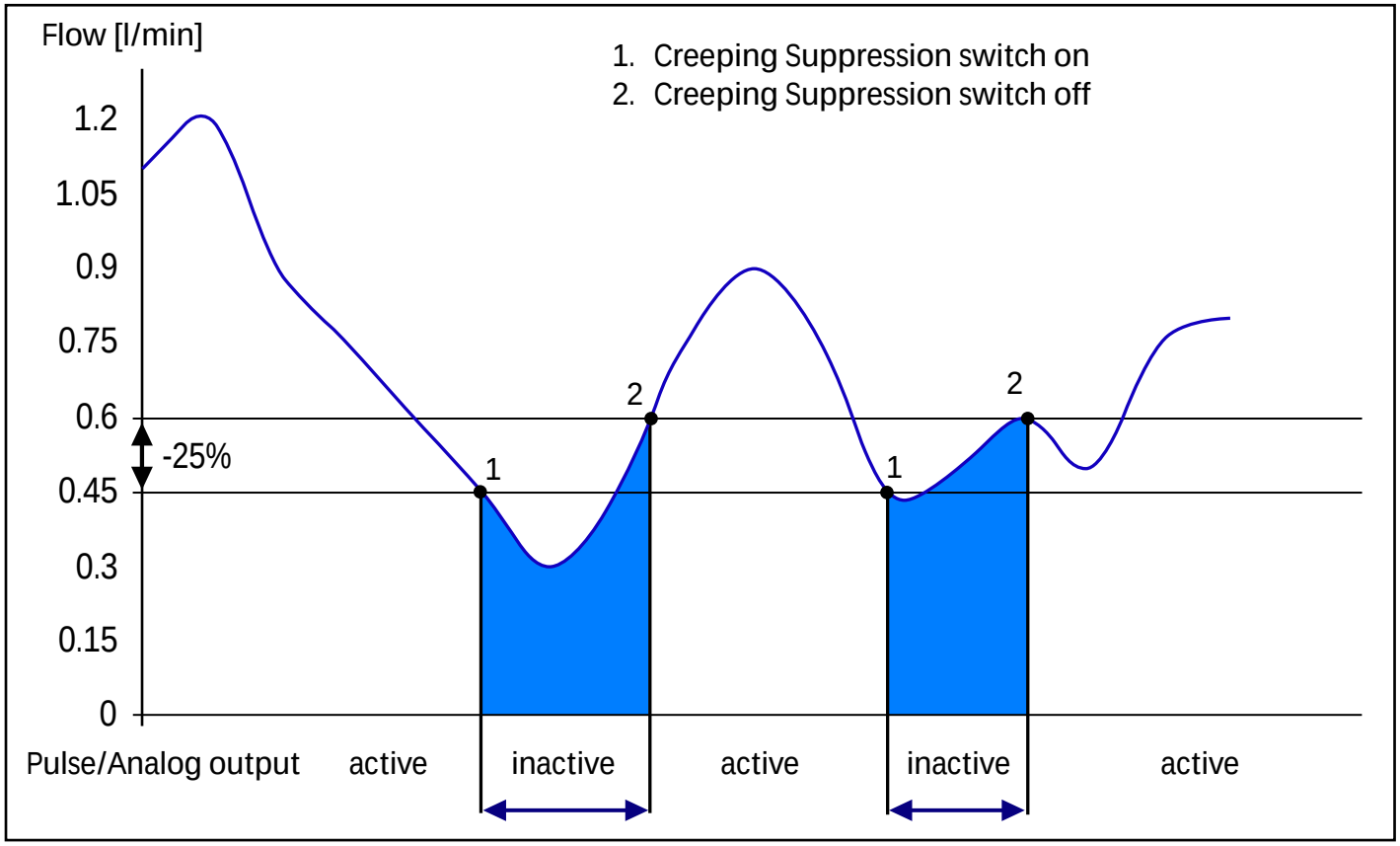

Fig. 12: Function of the creeping suppression illustrated with 0.6 l/min

Example : Creeping suppression = 0.6 l/min
If the flow rate is lower than 0.45 l/min the pulse output/analog output becomes inactive. If the flow rate exceeds 0.6 l/min a pulse is output again and added to the totalizer. Similarly, a value is transmitted to the analog output again.

Diagnostic

NOTICE

The sub menu "Diagnostic" shows the software/hardware version and other helpful values for analysis. Actual values and the instrument´s present status are important to analyze the measurement or failure by the manufacturer service

Analog output QA

The analog output is available as current output 4-20mA or 0-20mA. This is selected with the purchase order. As a standard it comes with current output 4-20mA. It can also be switched off by using the device menu or Programmtool.

The current output ranges from 0 to 22.6mA measuring the flow rate or the condition of the flow measurement.

The values here signify for 4-20mA configuration:

- 20 mA the upper limit of the relevant measurement
- 4 mA the lower limit of the relevant measurement
- 3.5 mA empty pipe

Upper and lower limit parameters can be set within the type-specific measurement of the device. By default, zero flow is set at 4 mA and the maximum flow is set at 20 mA.

Set point ranges : 0-20mA, 4-20mA, off
Output value : Flow, Temperature

When current output is used, the load must not be higher than 500Ohm. A higher load prevents the device from providing the maximum current of 22.6mA.

Characteristic curves analog output

The analog output is available as current output 4-20mA or 0-20mA. This is selected with the purchase order. As a standard it comes with current output 4-20mA. It can also be switched off by using the device menu or Programmtool.

0 - 20mA

For the following graphic "min Range" is used for 0% and "max Range" is used for 100%.

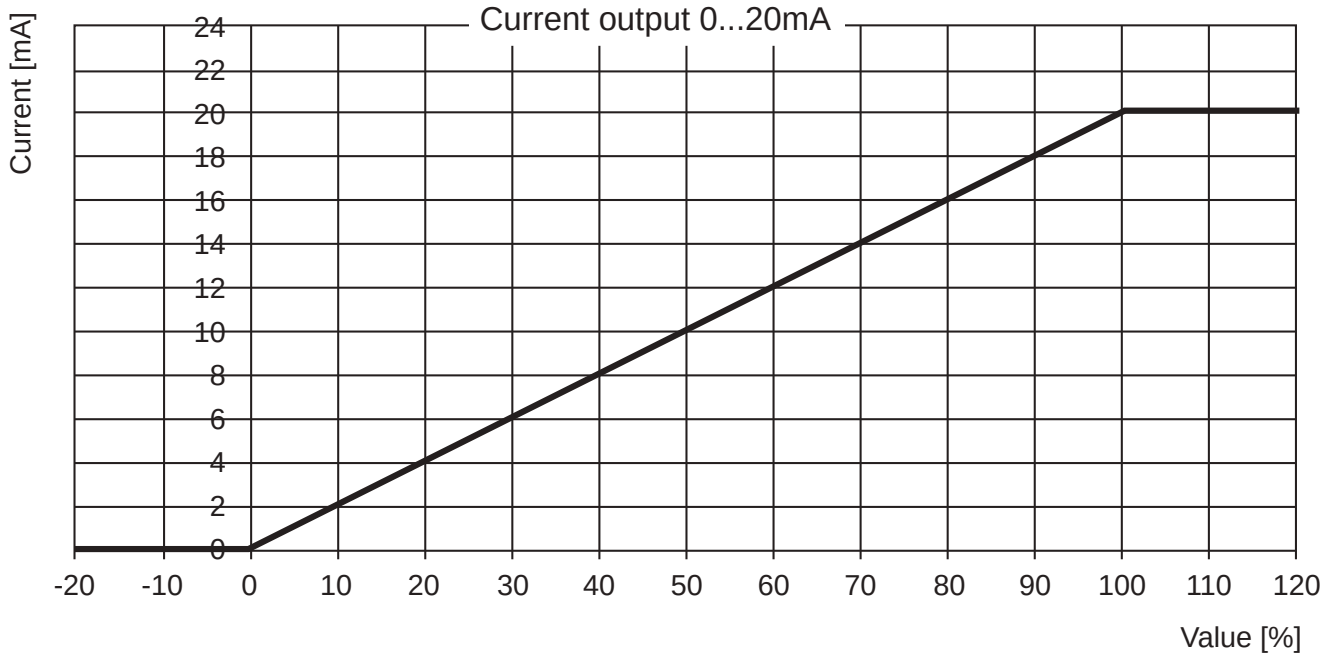

Value	Current [mA]
Smaller 0%	0
0% (min Range)	0
Between 0% and 100%	Linear interpolation from 0 to 20 mA
100% (max Range)	20
Bigger 100%	20
Bigger max Value	20

0 - 20mA

For the following graphic "min Range" is used for 0% and "max Range" is used for 100%

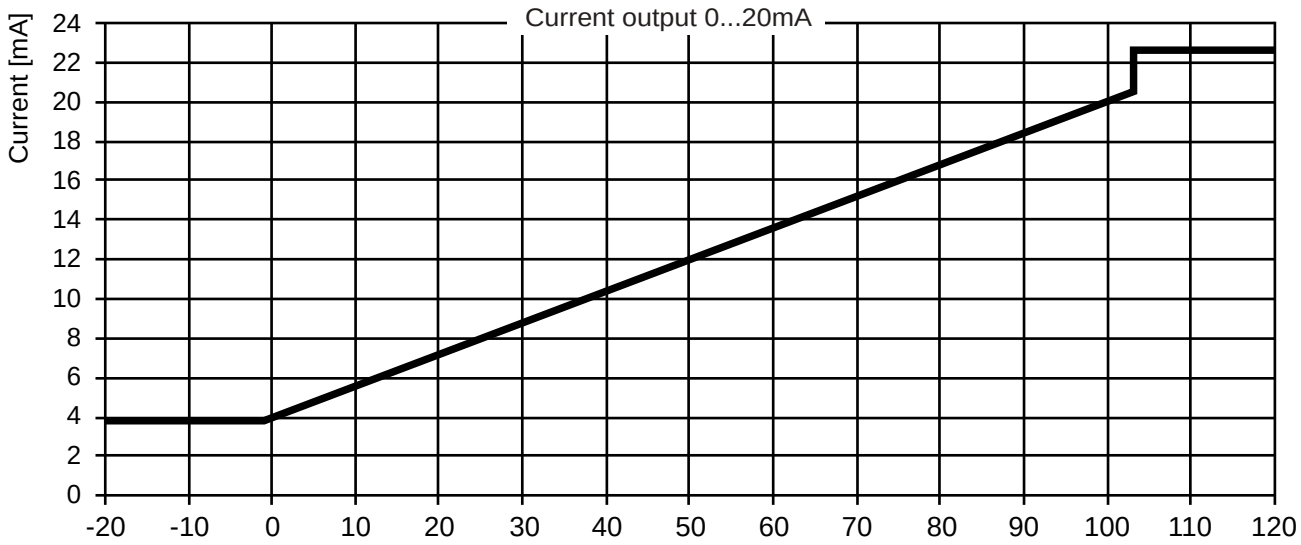

Value	Current [mA]
Empty pipe	3.5
Smaller -1.2%	3.8
Between -1.2% and 0%	Linear interpolation from 3.8 to 4mA
0% (min Range)	4
Between 0% and 100%	Linear interpolation from 4 to 20mA
100% (max Range)	20
Between 100% and 103%	Linear interpolation from 20 to 20.5mA
Bigger 103%	22.6

Pulse value

This section determines the output settings for pulsed outputs.

Choose configuration such as to neither exceed the maximum output frequency of the Flowmeter (10kHz) nor the maximum input frequency of the control. If the maximum frequency is exceeded the Flowmeter will not output pulses correctly.

Example	2.0 ml/Pulse
This Means	a pulse is emitted every 2.0 ml.
Setting Range	0.1...3000.0 ml/Pulse, in 0.1 ml/Pulse steps
Default Setting	1.0 ml/Pulse

Flow	Pulse value	Frequency	Period	Duration of the Pulse	
ml/s	ml/Pulse	Hz	s	s	ms
1	1	1	1	0.5	500
100	1	100	0.01	0.005	5
1000	0.1	10000	0.0001	0.00005	0.05
100	10	10	0.1	0.05	50
0.5	10	0.05	20	1	1000

In the last case every 20 seconds, a pulse of 1 second duration is put out.

Dosing

The Flowmeter can be configured for manually dosing by choosing the dosing function via the user display. The Volume "Dosing Batch" and the "Dosing Time" are freely adjustable. When the "Dosing Time" is set to zero, the timer control is inactive. A dosage can be started and stopped with the menu function keys "Start" and "Stop".

Setting range "Dosing Batch" : 0 - 3500 Liters
Setting range "Dosing Time" : 0 -30000 Seconds
Default setting "Dosing Batch" : 0 Liters
Default setting "Dosing Time" : 3 Seconds



Important! : If Dosing Time =0 the time switch-off is inactive.

Digital outputs

All outputs switch over to high resistance when the supply is smaller than 18V. When overload or short circuit is detected the digital outputs are switched off after 100µs for a period of 2s. When time is up the outputs get applied again.

Empty pipe output

	Empty pipe	Filled, no flow
0V normal closed	High resistant	0V
0V normal open	0V	High resistant
24V normal closed	High resistant	24V
24V normal open	24V	High resistant

Pulse output

	Empty pipe	Filled, no flow	Filled, flow
0V normal closed	0V	0V	0V Pulses
0V normal open	0V	0V	0V Pulses
24V normal closed	High resistance	High resistance	24V Pulses
24V normal open	High resistance	High resistance	24V Pulses

Upper limit output

	Below lower limit	Between the limits	Above upper limit
0V normal closed	High resistance	High resistance	0V
0V normal open	0V	0V	High resistance
24V normal closed	High resistance	High resistance	24V
24V normal open	24V	0V	High resistance

Lower limit output

	Below lower limit	Betwenn the limits	Above upper limit
0V normal closed	0V	High resistance	High resistance
0V normal open	High resistance	0V	0V
24V normal closed	24V	High resistance	High resistance
24V normal open	High resistance	24V	24V

Dosing output

	Startup of device	While dosing	Before/after dosing
0V normal closed	High resistance	High resistance	0V
0V normal open	High resistance	0V	High resistance
24V normal closed	High resistance	High resistance	24V
24V normal open	High resistance	24V	High resistance

Important! When using the dosing function the output should not be configured as normal closed!
If the dosing output is configured as normal closed the valve will stay open after the

Digital output Q1

Digital output Q1 may be used as pulse output, empty pipe detection, for switching dosing valve or limit control. By using Programmtool the user can switch between npn and pnp-transistor logic. In case of inductive load a diode has to be connected parallel to the coil.

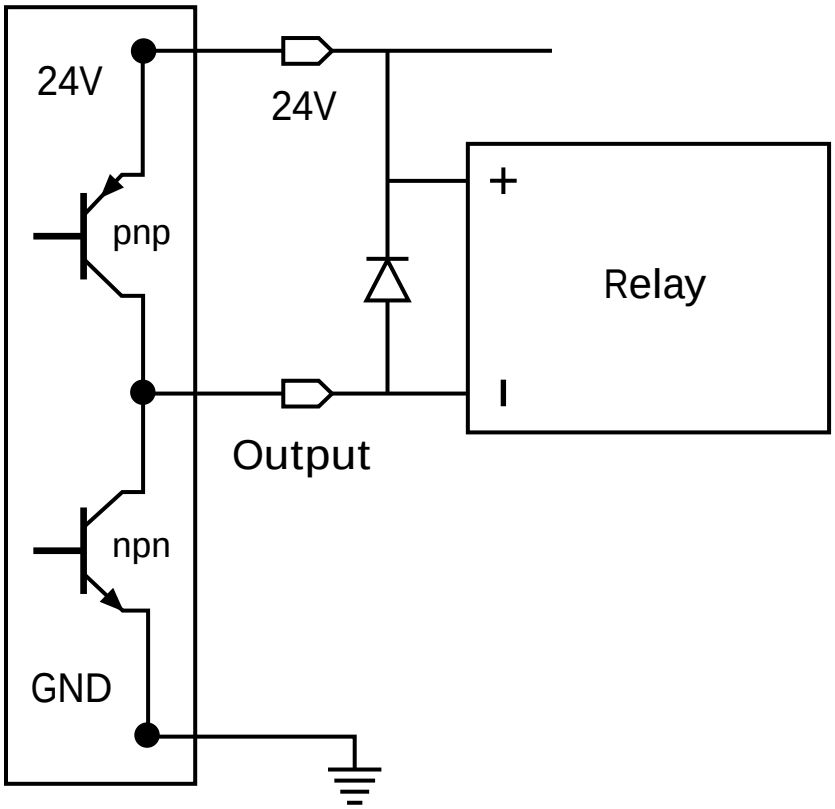

Fig. 13: Connecting Output Q1 to relay

Setting area : off, pulse output, empty pipe, dosing output, lower limit, upper limit, negative flow

Digital output Q2*

The npn or pnp logic can be selected. When the output is connected to an inductive load a diode has to be installed antiparallel to the load.

Example 2 : Flowmeter via pnp, external counter e.g. PLC

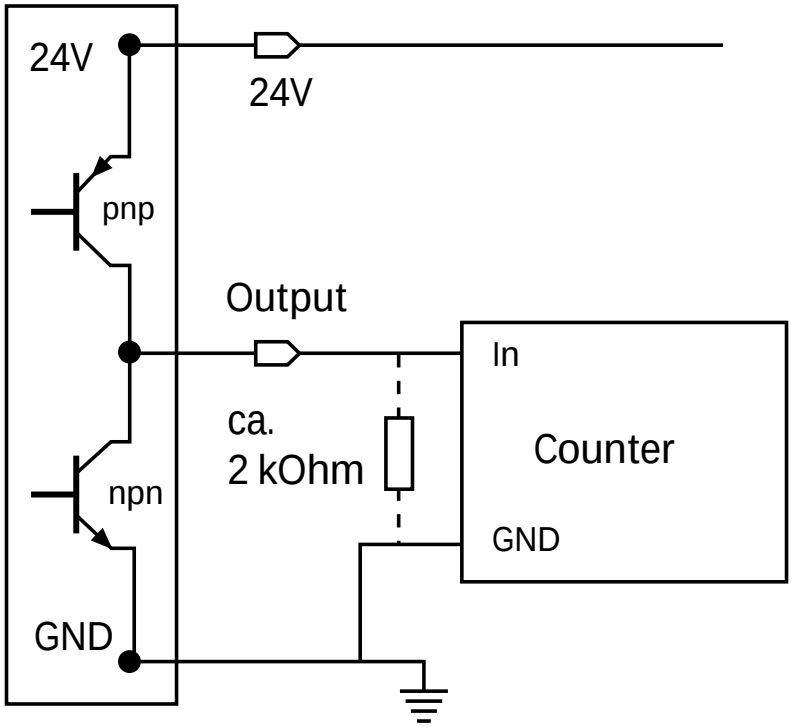

Fig. 14: Connecting output Q2 to counter

Setting area : off, pulse output, empty pipe, dosing output, lower limit, upper limit, negative flow

Important! Inductive load on the digital outputs without an installed diode may cause damage on the Flowmeter electronics.

Dosing function

Dosing can be determined in different ways :

1. Flowmeter as dosing device (dosing control via Flowmeter)

Flowmeter controls the complete dosing function. The dosing quantity (e.g. 400 ml) is pre-set in the Flowmeter via the display or Programmtool. Dosing starts, as soon as the digital input is wired to 24V, e.g. via a pushbutton. Flowmeter will open the dosing valve via the output configured for it. When the pre-set dosing quantity is released, the dosing valve is closed via the above output. The dosing procedure can also be started and stopped by using the dosing user menu. The second output can be used independently for signaling empty pipe, limit control or flow direction.

2. Flowmeter as flowmeter (dosing control via dosing equipment)

The dosing equipment controls the entire dosing function. The dosing quantity is fixed in the dosing equipment control during commissioning by pre-selecting the meter pulses. Dosing starts, when the relevant pushbutton of the dosing equipment is pushed. The control will now open the dosing valve. From now on Flowmeter will send a voltage pulse to the control for each volume unit that has flown through (e.g. per 1ml). When the pre-selected pulse quantity is reached, the control closes the dosing valve. In this case, output 1 is used to send out pulses, output 2 is independently usable for empty pipe detection, limit control or signalling negative flow.



The customer has to provide an emergency stop and an overfilling stop to prevent hazardous situations. Both functions must perform safety shut down of pumps and closing of valves.

Media

Flowmeter comes with a medium matrix with up to 8 interpolation values. Different media can be managed in the sub menu "Media". By using the sub menu point "Correction" it is possible to correct the flow measurement in percent. Example of operation see appendix.

Digital input I1*

Flowmeter has a digital input that is programmable to following functions: dosing input, set offset, creeping suppression inactive and reset counter. In order to start a dosing process, 24V DC power is required. The status of the dosing parameters is modified with the Programmtool

NOTICE

NOTE : The dosing input is locked so that a re-start is not possible during a running dosing process. After changing configurations via Programmtool a restart of the device is necessary to activate the doing input function.

When input setting is changed a device restart is required. After restart the changes are activated.

Available input functions

	Set offset	Creeping flow off	Dosing	Reset counter	off
0V	-	-	-	-	-
24V	Rising edge: 0->24V Set offset	State : deactivating creeping flow	Rising edge: 0->24V start dosing	Rising edge: 0->24 Vcounter is reset	-
	Run only in stationary medium				

The input function "Set Offset" may only be used when there is no flow through the meter. If an offset trim is done while liquid flow is present an offset drift will cause measurement deviations. If the Flowmeter shows an offset drift caused by a wrong offset setting, run the function "Set Offset" or "Basic Trim" again with filled flow meter and no present flow.

3.3 Overview of default settings

Function	Default settings
Digital output Q1	Pulse output as 24V normal open
Digital output Q2*	Empty pipe detection as 24V normal open
Digital input I1*	No function assigned
Current output QA	Flow as 4-20mA signal 20mA -> 3 l/min at DN5 6 l/min at DN7 24 l/min at DN10 60 l/min at DN15
Pulse value	1 ml/pulse
Creeping suppression	0.024 l/min at DN5 0.09 l/min at DN7 0.3 l/min at DN10 0.9 l/min at DN15

3.4 General Information

Please check the following before powering the flowmeter for the first time:

- Check the electrical connections and cable allocations
- Check the installation position of the flowmeter. Are the direction of the arrow on the name plate and the actual flow direction in the pipe congruent?
- Is the measurement pipe completely filled with fluid?
- Check the back pressure in the system

When everything has been checked, switch on power. After 30 minutes with power running the measuring device reaches the maximum accuracy.

4. Exchange of Measuring Device

WARNING!

- Switch off power before disconnecting the electrical connections!
- Wiring installation, disassembly and removal must be performed by qualified persons experienced and knowledgeable about electrical work.
- Serious injury or death from electric shock may occur if wiring, installation, disassembly or remove of wires is performed while electrical power is energized
- Please note that after replacing the flowmeter

  a) the programming of the previous flowmeter should be saved and copied on the new flowmeter
  b) when using the dosing function, set a quantity

If the device requires a configuration change, the display and programming unit Programmtool may be required (see section 6. Accessories).

Repair, Hazardous Substances

Before sending the flowmeter Flowmeter for repair, the following precautions must be taken:



Clean all process chemicals from the device. Fully rinse the flow path. Please pay close attention to the process fittings. All media must be removed before returning. This is particularly important, if the medium to be measured is health hazardous.

Devices judged to be insufficiently cleaned will be returned to sender. No inspection of device will be done until proper cleaning is completed by user.

Costs due to inadequate cleaning of the instrument for possible disposal or injury (burns, etc.) will be charged to the sender of the meter into account.



With the flowmeter send a detailed report describing the failure, the application and the physical-chemical properties of the medium parameters. (e.g. a decontamination declaration).

In order to be able to process your repair order quickly and smoothly it is important that you provide a technical contact person including phone and fax number as well as e-mail address.

5. Technical Specifications

5.1 Dimensions and weight

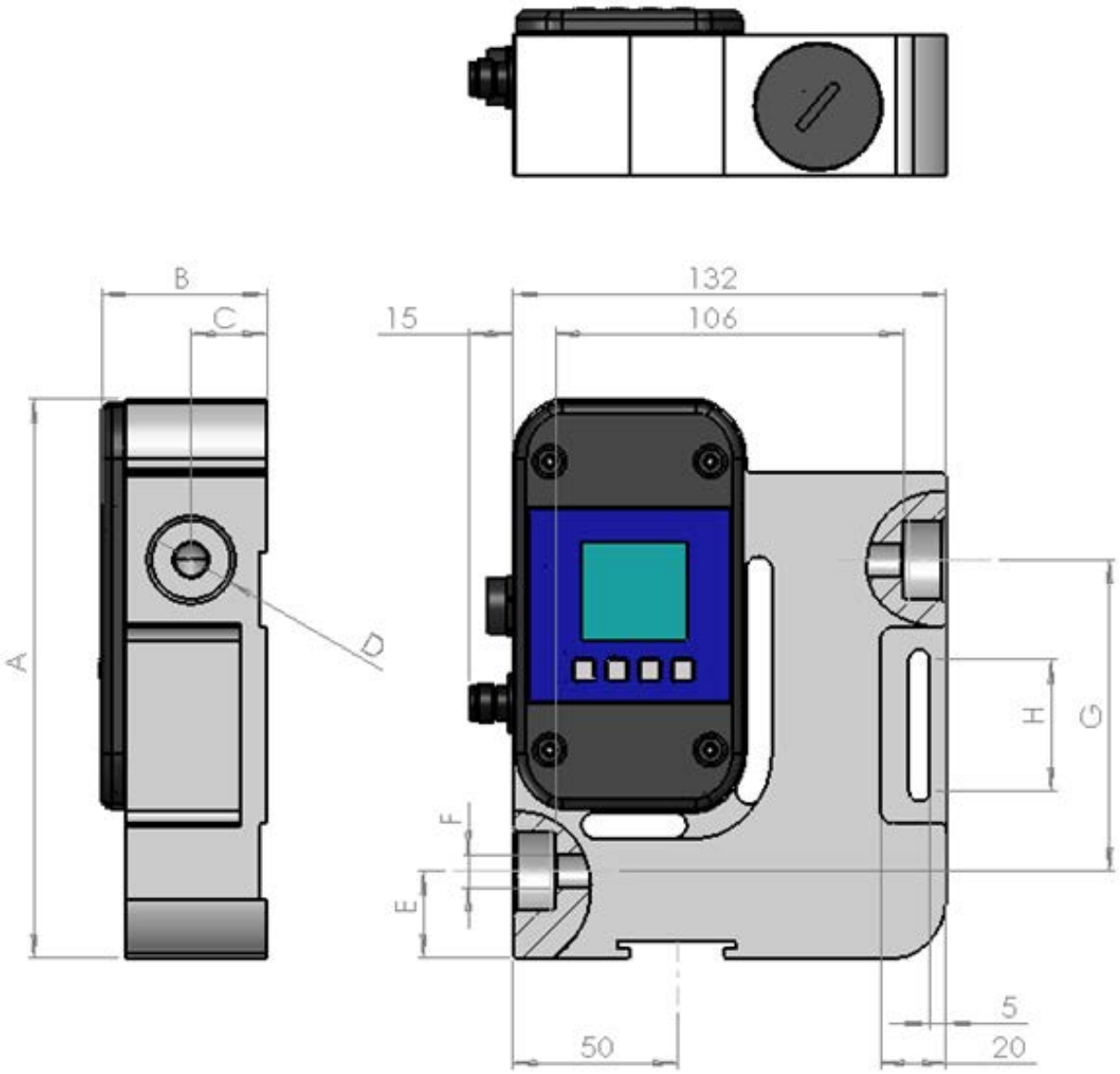

Nominal Diameter	Length A [mm]	Depth B [mm]	C [mm]	D [mm]	Width E [mm]	F [mm]	G [mm]	H [mm]	Weight [g] PE-HD	Weight [g] PVDF
DN5	167.5	50	23	G1/2	25	7	98	40	670	1100
DN7	167.5	50	23	G1/2	25	7	98	40	670	1100
DN10	170.5	50	23	G3/4	26.5	10	95	40	720	1190
DN15	175.5	55	25	G1	29	15	90	30	895	1470

5.2 Technical Specifications

Housing

Nominal diameters	DN5, DN7, DN10, DN15
Connection inner thread	G1/2, G1/2, G3/4, G1
Medium temperature	0...+60°C
Protection class	IP 65
Pressure nominal	7 Bar
Material	PE-HD (Polyethylene), PVDF (Polyvinylidene fluoride)

Electronics

Power supply	18...30VDC
Power input	at 24VDC = 3.6W
Connection	Plug 5 pins, option plug 8 pins
Ambient temperature	0....+60°C
Storage temperature	0....+60°C
Current output QA	0/4...20 mA, Lower- and upper limit adjustable, Ground connected to supply ground Error Signal according to NAMUR NE43 with 4…20mA
Digital output Q1/2	via transistor npn- and pnp-logic max. 30V/100mA output voltage according to DIN 19240: ≤5V means LOW ≥12V means HIGH Short cut resistant Frequency 0....10kHz
Data interface	Data interface for parameterize
Measuring deviation	± 2% of reading ± 3mm/s, option ± 1% of reading ± 3mm/s Reference conditions (VDE/VDI 2642)
Measuring range	0.024 - 3 l/min DN 5 0.09 - 6 l/min DN 7 0.3 - 24 l/min DN10 0.9 - 60 l/min DN15
Repeatability	0.5%

The measuring system Flowmeter meets the general EMC immunity requirements according to CE, EN 61000-6-3, EN 61000-4-2, EN 61000-4-3, EN 61000-4-4, EN 61000-4-5, EN 61000-4-6. It is in conformity with the requirements of the EC directives and has the CE label.

Behavior of the Temperature Sensor

The integrated temperature sensor has no direct contact to the liquid and is used to calculate the expansion of the housing. The environment temperature greatly influences the actual temperature of the temperature sensor. The response time of temperature changes relates to the mounting position of the temperature sensor inside the housing.

Step-Response Time

Step-response time after a significant temperature change. (Filter "Off")

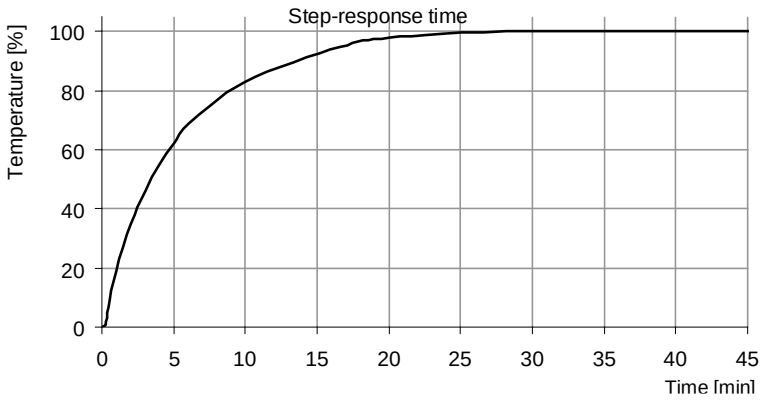

Filter Configurations for Temperature Sensor

Filter	100%
Off	1s
Soft	16s
Medium	1min
Strong	4min

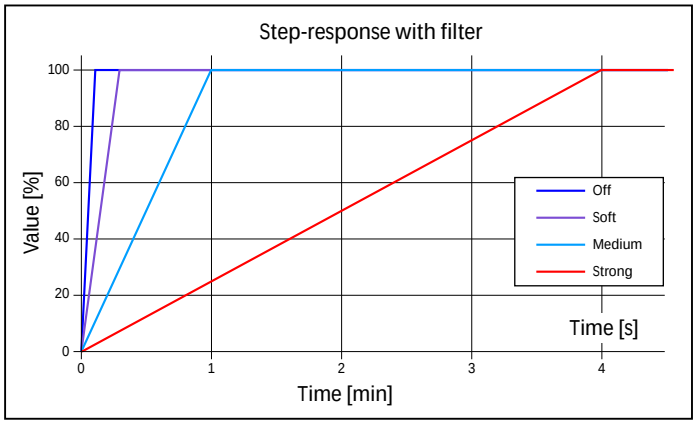

Influence of the environment temperature
In the table below some examples of the temperature influence are shown.

Liquid Temp	X	0.7	+	Environment temp.	X	0.3	=	Measured temp.
40	X	0.7	+	20°C	X	0.3	=	34°C
40	X	0.7	+	20°C	X	0.3	=	37°C
40	X	0.7	+	20°C	X	0.3	=	40°C
60	X	0.7	+	20°C	X	0.3	=	48°C

In case of an error :
In case of a short circuit of the temperature sensor -50°C are shown.
In case of a cable brake between temperature sensor and electronic -30°C are shown.

Possible error text Flowmeter

Display text	Pulse value	Behavior
Empty Pipe	When "Empty Pipe" is detected, no flow measurement	Display flashing + text
Low Voltage	When power supply is less than 18V the outputs are inactiv.	Display flashing + text
Short Circuit	When over load of the digital outputs is detected (>100mA), outputs are inactive.	Only text
Lower Limit	When the flow is less than an adjustable limit and the output is configured for limit control. At the same time the configured output is switched.	Only text
Upper limit	When the flow is more than an adjustable limit and the output is configured for limit control. At the same time the configured output is switched.	Only text
Sonic Speed	Actual sonic speed out of specified value. Run basic trim!	Only text

Appendix Examples of Operation

Enter Password

Key	Display Picture
Set	Password
4X ^	40000
Set	X0000
^	X1000
Set	XX000
4X ^	XX400
Set	XXX00
^	XXX10
Set	XXXX0
4X ^	XXXX4
Set	

Reset Counter

Key	Display Picture
Set	Set Offset Basic Trim Reset Counter Language Dosing
Set	Reset Counter Start?
Set	Reset Counter Start? Done

Set Offset

Use this function only when Flowmeter is completely filled with liquid, and there is no flow. If the offset is set while flow is present or when the pipe is empty it will cause an offset drift what results in a faulty measurement.

Reset Counter

Key	Display Picture
Set	Set Offset Basic Trim **Reset Counter** Language Dosing
2X Set	Filter Media **Set Offset** Basic Trim Mengenreset
Set	**Set Offset** Start?
Set	**Reset Counter** Start? Done

1-point correction

With the 1-point correction, the meter is calibrated to an operating point. Given an arbitrary amount of volume is filled into a container and measured with a weight. Attention: subtract the weight of the container.
With inclusion of the density of the medium, the volume (volume = mass / density) is obtained. This has to be compared with the meter display.
Shows the meter for instance 2% more than determined by the scale a value of -02.0% must entered for the 1-point correction.

Key	Display Picture
Set	Set Offset Basic Trim **Reset Counter** Language Dosing
3X Set	Units Filter **Media** Set Offset Basic Trim
Set	**Media** Water
⌄	**Media** Correction
Set	**Media Correction** -00.0%

Setting the sign
Setting the value

Set	**Media Correction** Done

To enable the correction back to delivery, a correction of 00.0% is to be entered.