TPP SERIES

PFA Teflon® Temperature Sensor

- **Excellent Chemical Resistance**
- **High Accuracy**
- **Perfect for Corrosive Liquids**



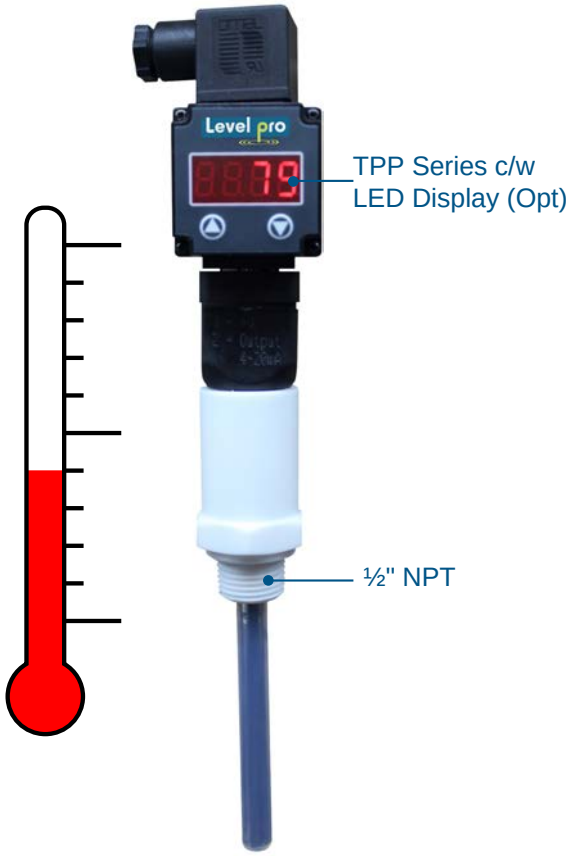

Features

- Completely Corrosion Resistant
- Easy to Install
- NPT Connection
- PFA Teflon Probe
- Temperature Ranges 0-100°C
- Suitable for Sticky Liquids-Gases
- 4-20mA Output
- Standard Probe Lengths. 4-6-8 inch
- Accuracy ± 0.5%

Option - LED Display

- 4-20mA LED Display - Relay + 4-20mA Output - Add Suffux (LED) to part number

NPT	Range
½"	32°- 212°F 0 - 100°C

SPECIFICATIONS

Type	In-Line Temperature Sensor
Range	32 -212 F (0-100 C)-(Std)*
Mechanical Conn.	½" NPT or G Type
Electrical Conn.	DIN 43650C
Sensor	2-Wire Loop Powered Class B (EN 60751)
Material	PTFE | PFA Teflon®
Stem Lenght (L)	4"-6"-8 " (Std) Other Lengths Available
Protection Class	IP 65
Pipe Diameter	6 mm

* Other Temperature Ranges Available

Dimensional

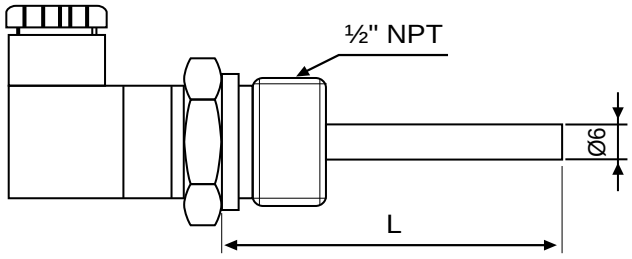

TPP SERIES

PFA Teflon® Temperature Sensor



Features

- Local display of measured value
- Direct mounting
- 4-digit LED display
- Easy setting by 2 button
- Relay Output
- Powered from current loop (4-20 mA)

Dimensional Drawing

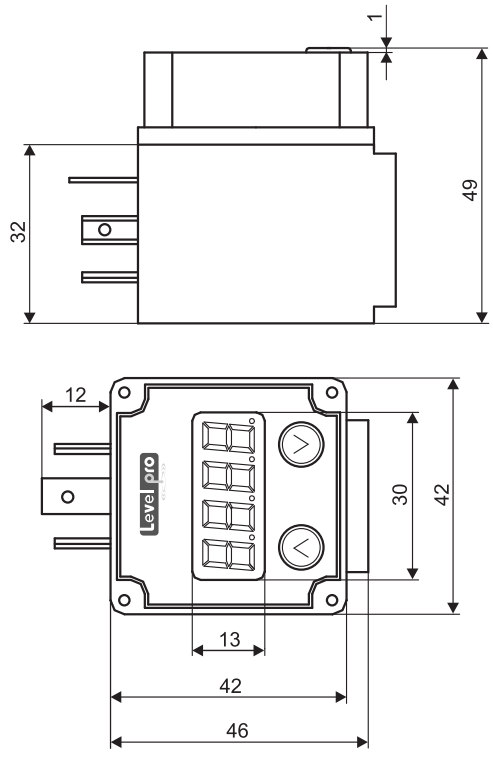

SPECIFICATIONS

Input signal	4 ... 20 mA
Voltage drop	< 2.5 V
Accuracy	0,1 % ± 1 digit
Display	4 digit, LED, height of digit 7mm
Ambient temperature range	-20 ... +70°C
Storage temperature range	-30 ... +85°C
Connection	Connector acc. to DIN 43 650
Housing	plastic ABS
Protection class	IP65
Dimension	42 x 46 x 49 mm
Weight	approx. 80 g

ORDERING

Size	Part Number	Material
4"	TPP-04	PTFE/PFA
6"	TPP-06	PTFE/PFA
8"	TPP-08	PTFE/PFA

* Add Suffix - 'L' for Local Display

Electrical Connection

Positive pole (+ U) is connected to pin No. 1, negative pole (0 V) is connected to pin No. 2. The plug-on display is powered by the current loop of the 4-20 mA, no additional auxiliary power is required.

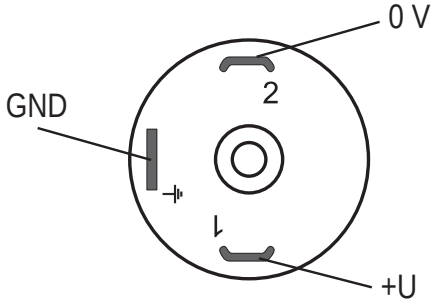

Two-wire :
1) Supply + (Red)
2) Signal + (Black)