LP 200 SERIES

Plastic Pressure Sensor | Transmitter

The Levelpro LP200 was designed to measure Pressure or Level within industry's most demanding corrosive process applications. When measuring pressure It can be mounted vertically or horizontally, and can easily be installed into a threaded process pipe tee fitting.
The LP200 implements a state of the art ceramic measuring principle that changes the physical pressure which equates to no more than a few microns into a linear electronic signal that can be measured.
This minimal deformation equates to negligible material strain of the ceramic electronic pressure-sensing diaphragm resulting in high resistance to alternating loads and long-term durability. Exactly what is required for tough industrial applications.



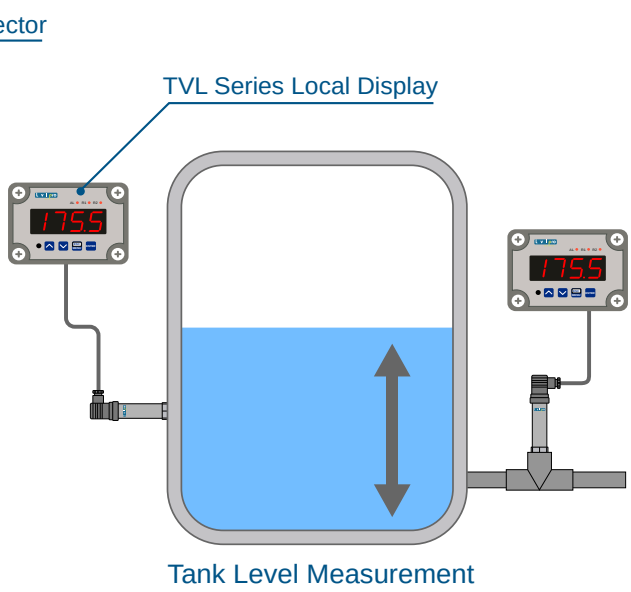



Typical Applications

- Chemicals | Acids | Bases
- Tank Level
- Industrial Process Piping
- Vapor Pressure
- Leak Detection Equipment
- Environmental Protection Scrubbers
- Filter | Strainer Notification.
- Leachate Collection
- Weir Flow
- Scrubbers

Features

- PP | PVDF | 316 SST Body
- Different Pressure Ranges Available
- Output | 4-20mA | 2 Wire Loop Powered
- NPT | G / Union Type Connection
- Ceramic Sensing Diaphragm
- Easy Installation
- High Accuracy
- No Programming Required
- Temperature Compensated
- Excellent Chemical Resistance

SPECIFICATIONS

Range	0-14ft | 0-20ft | 0-34ft | Other Ranges Available
Medium	Gas & Corrosive Liquid
Accuracy	0.2% or 0.5% F.S
Working pressure	18 - 36V DC
Output signal	4-20mA | Two-Wire Loop Powered
Medium temp	-30 - 85°C
Environment temp	-30 - 80°C
Store temp	-30 - 80°C
Temp. effect	±0.02% FS
Pressure connection	¾" NPT | G Type | ½" Union Type
Connection	DIN Hirschminn Connector

Dimensions

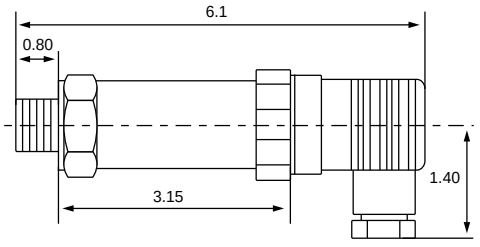

LP 200 SERIES

Plastic Pressure Sensor | Transmitter



Features

- Local Display of Measured Value
- Direct Mounting
- 4-digit Bright LED
- Easy 2 Button Programming
- Relay Output
- Powered from Current Loop / 4-20mA

Dimensional Drawing

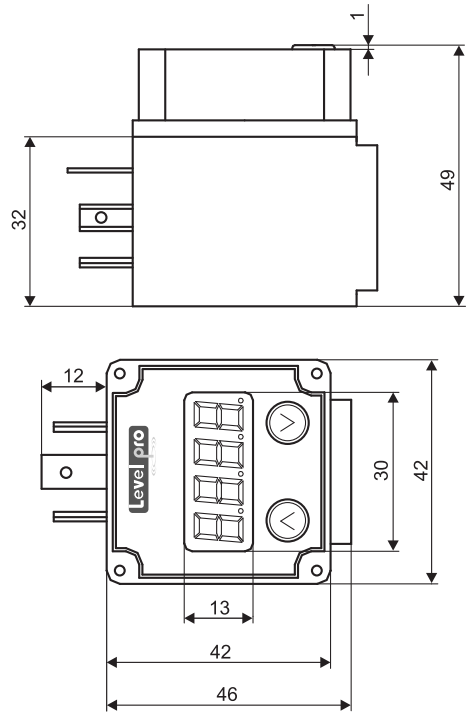

SPECIFICATIONS

Input signal	4-20mA
Voltage drop	< 2.5 V
Accuracy	0.1 % ± 1 digit
Display	4 digit LED | Height of Digit 7mm
Ambient temperature range	-20 - 70°C
Storage temperature range	-30 - 85°C
Connection	Connector acc. to DIN 43 650
Housing	Plastic ABS
Protection class	IP65
Dimension	42 x 46 x 49 mm
Weight	approx. 80 g

Electrical Connection

Positive pole (+ U) is connected to pin No. 1, negative pole (0 V) is connected to pin No. 2. The plug-on display is powered by the current 4-20mA loop, no additional auxiliary power is required.

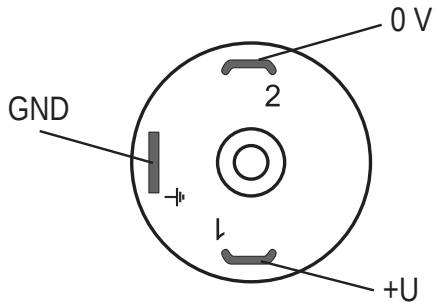

Two-wire :
1) Supply + (Red)
2) Signal + (Black)

ORDERING

Size	Part Number	Material
½"	LP200-1-0	PP
½"	LP200-1-0	PVDF
¾"	LP200-PP	PP
¾"	LP200-PF	PVDF

* Add Suffix - 'L' after part number for addition of LED Display

** Contact Factory for Dimensions for LP250M Series