Capsules – Introduction

- All-polypropylene housing is sturdy and chemically compatible
- Three membrane-type media and two depth-type media
- Wide range of retentive pore sizes
- All types available in three different lengths
- Diameter is a standard 78 mm
- Selected media available pre-sterilized by ethylene oxide (EtO)

APPLICATIONS

- Filter tissue culture media, fermentation broth, and ground water
- Can be set in serial mode to maximize throughput volumes
- Point-of-use sterile filtration
- Use capsules for pilot/prototype studies, scale up to the same media in the cartridge format
- Cannot be used for Air filtration



Five different filter media are available in the capsule format.

Model	Media	Characteristic	Media Type	Pore Size or Nominal Rating (µm)	Membrane Layers	Filtration Area per Capsule (cm^2)
CCS	PES	Hydrophilic	Membrane	0.20 – 0.45	Double	Up to 1,800
CCF	PTFE	Hydrophobic	Membrane	0.05 – 1.0	Single/Double	Up to 3,600
CCFH	PTFE	Hydrophilic	Membrane	0.20	Single	Up to 3,600
CCP	Polypropylene	Hydrophobic	Depth-type	0.8 – 30	N/A	Up to 2,600
CCG	Glass	-	Depth-type	0.45 – 1.0	N/A	Up to 1,200

For detailed chemical compatibility information, see page 132.
When ordering length code "C", end fixture code "D" is not available.

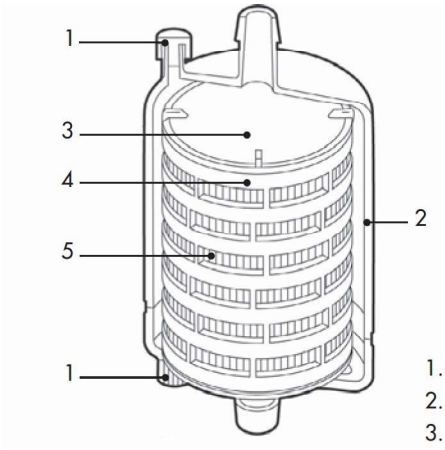

1. Vent/drain (1/8" NPT)
2. Housing
3. End cap
4. Outer sleeve
5. Pleated filter media


B
1/4" NPTM


D
1/2" NPTM


H
3/8" hose barb
(O.D.13mm)


N
1-1/2" sanitary fitting

PES Capsule Filter (CCS)

- Can be sterilized by autoclaving (121°C, 30 min) or treatment with ethylene oxide (EtO)
- Available pre-sterilized (EtO) or pre-rinsed (recommended when filtering high purity water)

APPLICATIONS

- Filter pure water, high purity chemicals, pharmaceuticals, cosmetics, and tissue culture media
- Remove bacteria or sub-micron particulates
- Cannot be used for Air filtration

SPECIFICATIONS

Maximum Inlet Pressure	0.39 MPa (57 psi)
Maximum Operating Temperature	60°C (140°F)

		CCS-020	CCS-045
Layers		Double	Double
Pore Size (µm)		0.20	0.45
Bubble Point (water)		≥0.39 MPa (57 psi)	≥0.29 MPa (43 psi)
LRV / Organism		≥7 B. diminuta	≥7 S. marcescens
Length Code	Length (mm)*	Filtration Area (cm²)	
C	102	450	
D	129	900	
E	201	1,800	

*Length given is for capsule with end fixture H.

WATER FLOW RATE

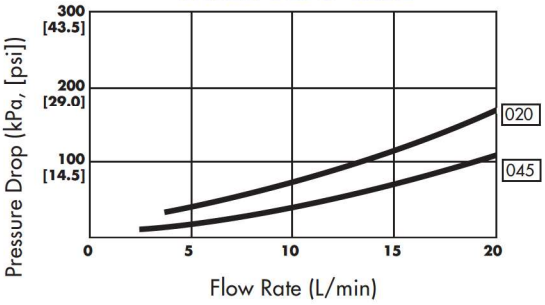

Typical water flow rate for CCS-____-D1B at 25°C

ORDERING INFORMATION

CCS - □□□ - □ 1 □ (S)*1 (R)*2

Pore Size (µm)	Pore Size Code
0.20	**020**
0.45	**045**

Length (mm)	Length Code
102	**C**
129	**D**
201	**E**

End Fixture (Inlet and Outlet)	End Fixture Code
1/4" NPTM	**B**
1/2" NPTM	**D*3**
3/8" hose barb	**H**
1 1/2" sanitary fitting	**N**

*1. When ordering sterile units, specify "S" in the last position of the catalog number.
*2. When ordering Pre-rinsed units, specify "R" in the last position of the catalog number.
*3. When ordering length code "C", end fixture code "D" is not available.

PTFE Capsule Filters – Hydrophobic (CCF) and Hydrophilic (CCFH)

- Compatible: solvent and pH-resistant
- Hydrophobic:
  - Supported membrane except CCF-A10 and CCF-005
  - Single layer except CCF-A10 and CCF-005 which has double layer
  - 5 pore sizes
  - Can be sterilized by autoclaving (121°C, 30 min) or treatment with ethylene oxide (EtO).
- Hydrophilic:
  - Polyester membrane support
  - Single layer
  - 0.2 µm pore size

Note: Autoclaving or allowing membrane to dry will render it hydrophobic.

APPLICATIONS

- Use serially as prefilter and final filter
- Corrosive fluids and gases, photoresists, and both alkalis and acids
- Hydrophobic:
  - Solvent filtration
- Hydrophilic:
  - Solvents with higher surface tension
  - Heterogeneous fluid mixtures
- Cannot be used for Air filtration

WATER FLOW RATE

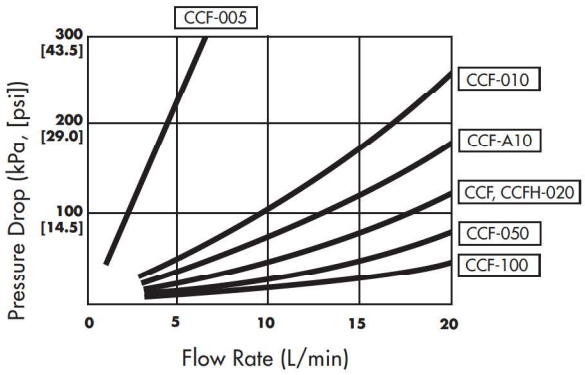

Typical water flow rate for CCF/CCFH-___-D1B at 25°C

SPECIFICATIONS

Maximum Inlet Pressure	0.39 MPa (57 psi)
Maximum Operating Temperature	60°C (140°F)

	CCF-005	CCF-A10	CCF-010	CCF-020	CCF-050	CCF-100	CCFH-020
	Hydrophobic						Hydrophilic
Layers	Double	Double	Single	Single	Single	Single	Single
Pore Size (µm)	0.05	0.10	0.10	0.20	0.50	1.0	0.20
Bubble Point (IPA) MPa (psi)	≥0.16 (23)	≥0.15 (22)	≥0.13 (20)	≥0.09 (13)	≥0.05 (7)	≥0.03 (4)	-
Length Code / Length* (mm)	Filtration Area (cm²)						
C / 102	900	900	570	570	570	570	900
D / 129	1,800	1,800	1,150	1,150	1,150	1,150	1,800
E / 201	3,600	3,600	2,300	2,300	2,300	2,300	3,600

*Length given is for capsule with end fixture H.

ORDERING INFORMATION

CCF - □□□ - □ 1 □ (S)*1
CCFH - □□□

Pore Size (µm)	Pore Size Code
0.05	**005**
0.10	**A10**
0.10	**010**
0.20	**020**
0.50	**050**
1.00	**100**

Pore Size (µm)	Pore Size Code
0.2	020

Length (mm)	Length Code
102	**C**
129	**D**
201	**E**

End Fixtures (Inlet and Outlet)	End Fixture Code
1/4" NPTM	**B**
1/2" NPTM	**D*2**
3/8" hose barb	**H**
1 1/2" sanitary fitting	**N**

*1. When ordering sterile units, specify "S" in the last position of the catalog number.
*2. When ordering length code "C", end fixture code "D" is not available.

ADVANTEC®

Polypropylene Capsule Filter (CCP)

- Depth-type matrix: high dirt holding capacity, superior retention
- Compatible with aqueous solutions and solvents
- Thermally welded to prevent fiber slough-off and minimize changes in pore size during filtration
- Wide range of particle size cut-offs
- Can be sterilized by autoclaving (121°C, 30 min) or treatment with ethylene oxide (EtO).

APPLICATIONS

- High purity water filtration
- Prefiltration to a final membrane filter such as PES or PTFE (CCS, CCF, or CCFH)
- Ultracleaning
- Filtration of process chemicals
- Cannot be used for Air filtration

SPECIFICATIONS

Maximum Inlet Pressure	0.39 MPa (57 psi)
Maximum Operating Temperature	60°C (140°F)

WATER FLOW RATE

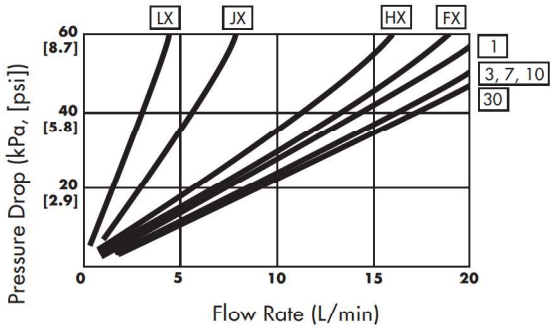

Typical water flow rate for CCP-____-D1B at 25°C.

		CCP-								
		LX	JX	HX	FX	1	3	7	10	30
Particle Retention	Particle Size (µm)	0.8	1.0	2.0	3.0	2 – 5	5 – 10	10 – 20	10 – 20	20 - 30
	(%)	>99	>99	>99	>99	94	98	98	92	97
Length Code	Length* (mm)	Filtration Area (cm^2)								
C	102	400	500	500	550	500	600	500	550	650
D	129	800	1,000	1,000	1,100	1,000	1,200	1,000	1,100	1,300
E	201	1,600	2,000	2,000	2,200	2,000	2,400	2,000	2,200	2,600

*Length given is for capsule with end fixture H.

ORDERING INFORMATION

CCP - [ ][ ] - [ ] 1 [ ]

Retention Characteristic Code
LX
JX
HX
FX
1
3
7
10
30

Length (mm)	Length Code
102	C
129	D
201	E

End Fixtures (Inlet and Outlet)	End Fixture Code
1/4" NPTM	B
1/2" NPTM	D*
3/8" hose barb	H
1 1/2" sanitary fitting	N

*. When ordering length code "C", end fixture code "D" is not available.

Glass Fiber Capsule Filter (CCG)

- Depth-type matrix of borosilicate glass fiber
- Large dirt holding capacity
- Resistant to most fluids except strong acids
- Contains a small amount of acrylic resin binder to enhance wet strength
- Can be sterilized by autoclaving (121°C, 30 min) or treatment with ethylene oxide (EtO).

APPLICATIONS

- Sea water filtration
- Aquaculture
- Prefiltration to a final membrane filter such as PES or PTFE (CCS, CCF, or CCFH)
- Cannot be used for Air filtration

SPECIFICATIONS

Maximum Inlet Pressure	0.29 MPa (43 psi)
Maximum Operating Temperature	60°C (140°F)

		CCG-045	CCG-1
Particle Retention	Particle Size (µm)	1 – 1.5	1.5 – 2.0
	(%)	99.9	
Length Code	Length* (mm)	Filtration Area (cm²)	
C	102	300	
D	129	600	
E	201	1,200	

*Length given is for capsule with end fixture H.

WATER FLOW RATE

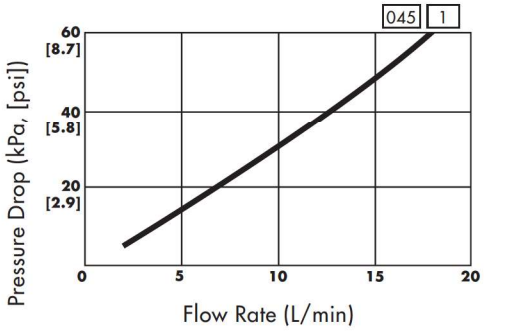

Typical water flow rate for CCG-____-D1B at 25°C.

ORDERING INFORMATION

CCG - □□□ - □ 1 □

Nominal Rating (µm)	Nominal Rating Code
0.45	045
1.0	1

Length (mm)	Length Code
102	C
129	D
201	E

End Fixtures (Inlet and Outlet)	End Fixture Code
1/4" NPTM	B
1/2" NPTM	D*
3/8" hose barb	H
1 1/2" sanitary fitting	N

*. When ordering length code "C", end fixture code "D" is not available.