PPT SERIES

Pressure Meter | Tri Display Pressure Meter

truflo®





PP | PVDF | 316L

RoHS Compliant CE

SERIES : PPT

CONNECTION : 1 ¼" G Type Thread

FEATURES

- Display Changes from Green to Red (Alarm Status)
- Time to Change Bags-Clean Filter
- Highly Accurate 0.25% of Full Scale
- Ceramic Diaphragm 316 SS ½" NPT Process Port
- Display Pressure Units PSI, Bar, Kg/Cm2, KPA, MPA, In Hg
- Two (2) 3 Amp Relay Alarm Functions
- 4-20mA Analog Output Function (Remote Display)
- Digital RS-485 Interface Function (optional)
- IP66 NEMA 4X
- Plastic Gauge Isolator For Corrosive Services, Slurries,
- Heavy Sediment (optional)

Color of Display

Alarm status	No Alarm	Alarm 1 or Alarm 2 ON
Pressure display (PV)	1 > Green color 2 > Display Pressure value	1 > Red color 2 > Display Pressure value

SPECIFICATIONS

Pressure sensor	Ceramic (AL_2O_3 96%)
Measured fluids	Water or Chemical fluid or gases
Applied temperature	-40 ~ +125°C
Accuracy	± 1.0% of F.S. @ 25°C max.
Repeatability	<±0.5% FS max.
Operating voltage	10~30VDC
Current consumption	60mA max.
Pressure unit	Psi Bar KPa Kg | cm_2 selectable
Pressure display	0~9999 (Green | Red changeable)
Alarm display	PRT : 0~9999 *2 (Red color) PRS : 0~9999 (Red color)
Communication	RS-485 RTU optioned
Transmitter	4~20mA or 0~10V optioned
Output method	Two NPN or Two PNP or Two relay
Output current	150mA max.
Relay contact rated	5A/250 VAC max.
Over pressure	200% of FS min.
Burst pressure	300% of FS min.
Zero drift	@ 20 °C ± 0.03% FSO
Sensitivity drift	@ 20 °C ± 0.03% FSO
Resistance of output	50Ω max.
Thermal drift	± 0.03 % FS /°C
Material of housing	ABS
Operating temperature	- 25 ~ +85°C
Protection class	IP- 64
Approval	CE RoHS

PPT SERIES

Pressure Meter I Tri Display Pressure Meter

truflo®

PRT - 10 R - mA - SUS - 14PT - M12

Pressure Range	Output Method	Attachment Function	Port material	Tooth Rule	Connection Method
C1 = -1.00 ~ 1.00 Bar (-14.5 ~ +14.5 Psi) C10 = -1.00 ~ 10.00 Bar (-14.5~145.0 Psi) 10 = 0.00 ~ 10.00 Bar (0~145.0 Psi) 100 = 0. 0~ 100.0Bar (0~1450Psi) 400 = 0 ~ 400 Bar (0~ 5800Psi) 600 = 0 ~ 600 Bar (8700Psi)	P = PNP*2 N = NPN*2 R = Relay*2	RS = with RS-485 non = without RS-485 mA = 4~20mA V = 0~10V	TF = PVDF PP = PP SUS = SUS-316L	TF or PP : 12NPT = 1/2" NPT 12FNPT = 1/2" FNPT SUS : 14PT = 1/4" PT 18PT = 1/8" PT	2M = Lead wire 2m M12 = M12 connection

600 = 0 ~ 600 Bar (8700Psi)

DIMENSION (MM)

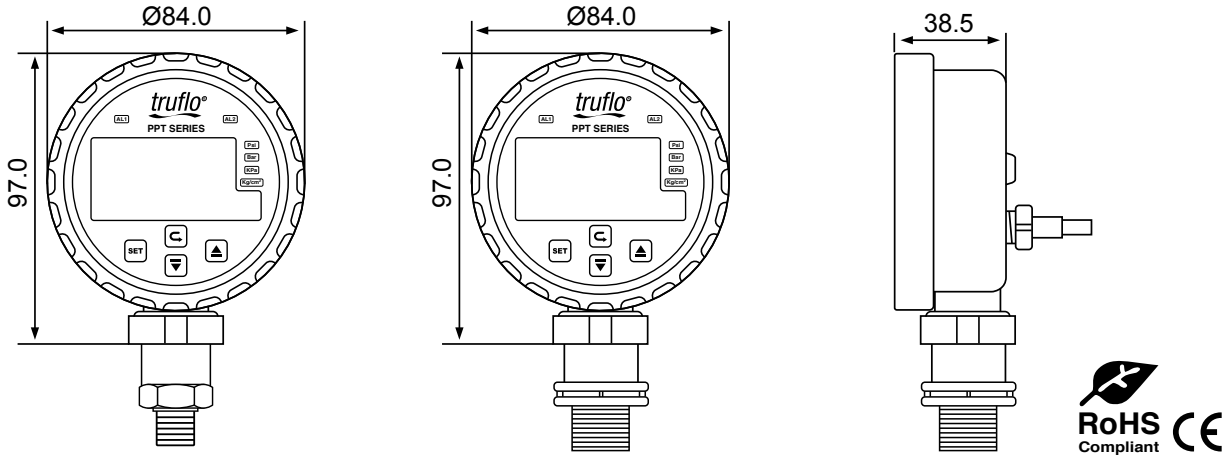

Wiring Diagram

PNP or NPN Output	Relay output	PNP or NPN output with RS-485	NPN or PNP output with 4~20mA or 0~10V	Relay output with 4~20mA or 0~10V
1> Brown : +V 2> White : PNP or NPN 3> Blue : 0V 4> Black : PNP or NPN	1> Brown : +V 2> White : R2 (NO) 3> Blue : 0V 4> Black : R1 (NO) 5> Grey : Com	1> Brown : +V 2> White : NPN or PNP 3> Blue : 0V 4> Black : NPN or PNP 5> Grey : RS- 6> Orange : RS+	1> Brown : +V 2> White : NPN or PNP 3> Blue : 0V 4> Black : NPN or PNP 5> Grey : 0V 6> Orange : mA or V	1> Brown : +V 2> White : R2 (NO) 3> Blue : 0V 4> Black : R1 (NO) 5> Grey : Com 6> Orange : mA or V

Display Range

Unit / Range	Bar	Kg/cm2	Psi	KPa
「C1」	-1.00 ~ 1.00	-1.02 ~ 1.02	-14.5 ~ 14.5	-100.0 ~100.0
「C10」	-1.00 ~ 10.00	-1.02 ~ 10.20	-14.50 ~145.0	-100.0 ~ A00.0
「10」	0.00 ~ 10.00	0.00 ~ 10.20	0.0 ~145.0	0.0 ~ A00.0
「100」	0.0 ~ 100.0	0.0 ~ 102.0	0 ~1450	0 ~ A000
「400」	0 ~ 400	0 ~ 408	0 ~ 5800	non
「610」	0 ~ 600	0 ~ 612	0 ~ 8700	non