OBS-LC SERIES

Pressure Gauge & Isolator | Battery Operated

- One Piece Plastic Design
- Battery Operated > 3 Years
- Digital Combo Gauge + Isolator

PVC | CPVC | PP | PVDF

RoHS Compliant CE

SERIES : OBS-LC
CONNECTION : ½" (M) | (F) NPT | G | Flange
DIAPHRAGM : PTFE Teflon®



All Plastic Design (Gauge + Isolator)

FEATURES

- All Plastic Gauge & Isolator
- No Filling Required
- Heavy Duty Design | Simple to Install
- Completely Corrosion Resistant
- Extra Large LCD Display
- Reduces Small Pressure Surges caused by Water Hammer | Metering Pump Pulsations
- Highest Accuracy in Industry | ±1%
- One-Piece Molded Design | No Assembly
- Suitable for Corrosive Media + Slurries
- No Programing Required
- PTFE Diaphragm | Standard
- Replaceable Lithium Battery
- Long Life > 3 Years

SPECIFICATIONS

Dial Diameter	Large 2½" Face | Big Numbers
Mounting	Bottom Connection | ½"
Housing	PP | PVDF | (PTFE Teflon®) Diaphragm
Lens	One Piece Molded Design | No Assembly
Display	Liquid Crystal Display - LCD
Programming	Push-Button | Eprom Non-Volatile
Accuracy	±1.0% F.S.
Operating Temperature	PVC - 140°F | CPVC - 180°F | PP - 170°F | PVDF - 195°F
Connection	½" (M) | (F) NPT | G Type | Flange
Pressure Range*	150 psi | (10 bar)

* (Non-Shock)

OBS-LC SERIES

Pressure Gauge & Isolator | Battery Operated

HOW TO ORDER

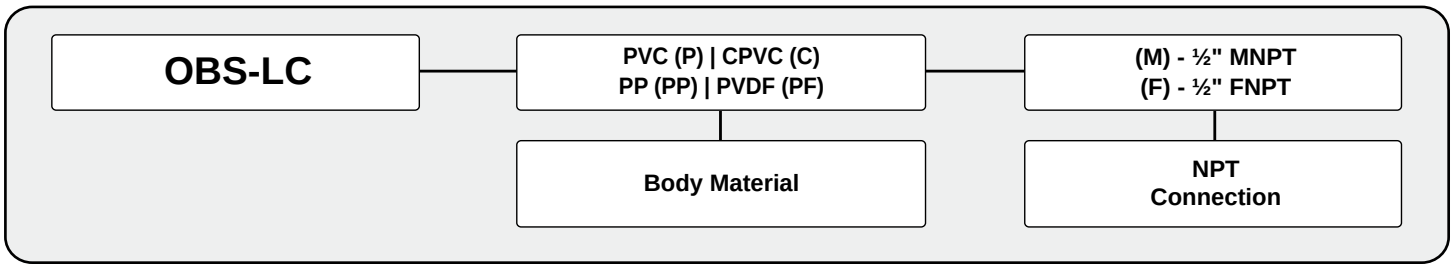

DIMENSIONS

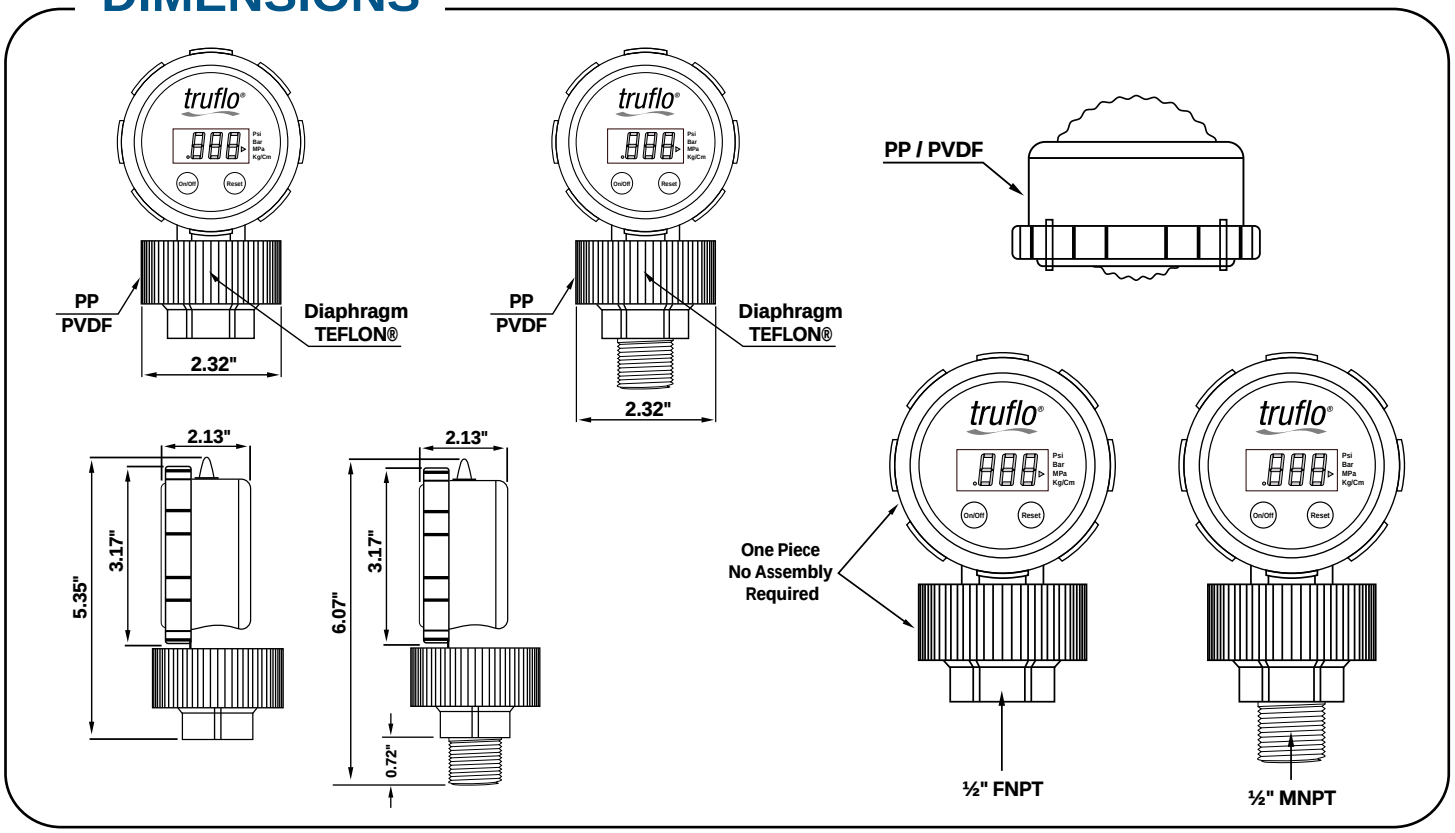

INSTALLATION

Do not tighten by grasping the case of the gauge as this may cause damage.

1. Before installing the OBS Series pressure gauge, ensure attention is given to the Process Liquid, Chemical Compatibility, Temperature, Vibration, Pressure Spikes and other climatic and application conditions that may adversely affect the performance.

2. The user shall ensure that the correct gauge pressure range and the correct materials of construction are selected.

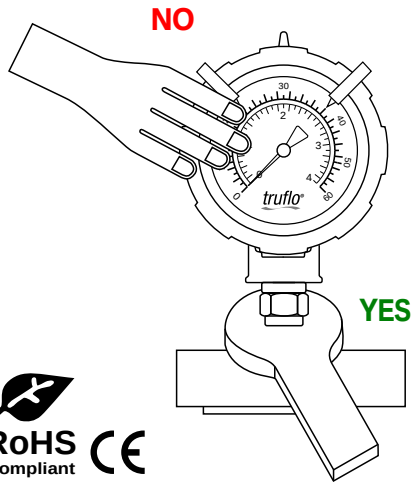

RoHS Compliant CE