All-Glass Filtration Assemblies

- **All-glass design** restricts contact with reactive surfaces such as steel or rubber to minimize contamination of sample or filtrate
- **Standard 25 and 47 mm filtration funnels** mount on filtration flask using a ground glass joint
- Outlet of support base drip tube is positioned below the side arm connection to prevent sample aspiration into vacuum line
- **All wetted surfaces are borosilicate glass** with the exception of stainless steel and PTFE support options



GFA 25 (311220)

SPECIFICATIONS

	25 mm Holder	47 mm Holder
Materials:		
Funnel, base unit and flask	Borosilicate glass	
Support	Sintered glass, stainless steel screen, or PTFE	
Connections:		
Ground glass joint	14/20 female	40/35 female
Side arm	6 mm (19/22 inch)	6 mm (3/8 inch)
Capacity:		
Funnel	15 mL	300 mL
Receiver flask	250 mL	1 L
Membrane filter size	25 mm	47 mm
Prefilter size (if used with membrane)	16 mm	35 mm
Filtration area	2.1 cm^2	9.6 cm^2

ORDERING INFORMATION

	25 mm Holder		47 mm Holder	
Support type:	**Model**	Catalog No.	**Model**	Catalog No.
Glass frit	**GFA 25**	311220	**GFA 47**	311420
Stainless steel	**GFS 25**	311320	**GFS 47**	311520
PTFE	-	-	**GFT 47**	311620

Replacement Parts

		25 mm Holder		47 mm Holder		
Model		**GFA 25**	**GFS 25**	**GFA 47**	**GFS 47**	**GFT 47**
Catalog No.		311220	311320	311420	311520	311620
1	Funnel	311201		311401		
-	Support	-	311304	-	311504	311604
-	PTFE Gasket	-	311305	-	311505	-
4	Support base	311222	311322	311422	311522	
5	Clamp	311003		311403		
6	Receiver flask	311225		311425		

Optional Accessories

	25 mm Holder	47 mm Holder
Funnel, 100 mL	-	311408
Funnel, 150 mL	311208	-
Funnel, 300 mL	311209	-
Funnel, 500 mL beveled	-	311409
Funnel, 1 L graduated	-	311410
Receiver flask, 2 L	-	311426

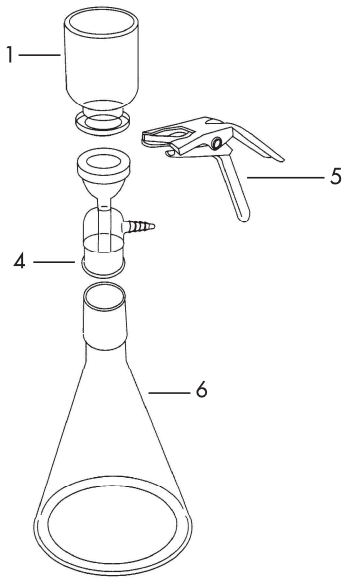

GFA