Stainless Steel Vacuum Manifolds

- **Autoclavable**
- **2-way or 3-way valve available**, use a 3-way valve when the manifold is used under closed conditions and must be vented to atmosphere without breaking the vacuum connection. 3-way valve vent is female luer slip, accepts standard disposable syringe filter (Page 16) or stainless steel syringe filter holder (KS 13, page 105)
- **Standard cup** accepts a #8 stopper to adapt microanalysis units and other devices
- **Exterior taper** accepts a 40/35 female joint
- **Sterility Test Manifold** features rear mounted flushing manifold for use in USP bacteria retentive method



Vacuum Filter Manifold Family

SPECIFICATIONS

Materials:	
Body and branches	Type 304 stainless steel
Valves	PTFE stopcock, chrome plated brass body
Connections:	
Outlet	1/4" male NPT to hose barb fitting connects main manifold to 3/8" ID vacuum tubing
Standard cup	Accepts #8 and #8b stopper
Exterior taper	40/35 male joint



Exterior taper for a 40/35 glass joint. 3-way valve.

Standard Cup

Dimensions:	L x W x H		Distance between stations (center to center)		Weight	
	in	cm	in	cm	lb	kg
Single	8 x 4 3/4 x 7	20.3 x 12 x 17.8	-	-	5.5	2.5
3 station	18 x 4 3/4 x 7	45.7 x 12 x 17.8	5 1/2	14	9.9	4.5
6 station	28 1/2 x 4 3/4 x 7	72.4 x 12 x 17.8	4 3/4	12	14.3	6.5

Exterior Taper

Dimensions:	L x W x H		Distance between stations (center to center)		Weight	
	in	cm	in	cm	lb	kg
Single	8 x 4 3/4 x 8	20.3 x 12 x 20.3	-	-	5.5	2.5
3 station	18 x 4 3/4 x 8	45.7 x 12 x 20.3	5 1/2	14	10.4	4.7
6 station	28 1/2 x 4 3/4 x 8	72.4 x 12 x 20.3	4 3/4	12	16.9	7.7



Standard branch accepts a #8 or #8b stopper, 2-way valve.

ORDERING INFORMATION

	Standard cup		**Exterior taper**		**Sterility Test** (standard cup)
Valve type:	2-way	3-way	2-way	3-way	3-way
Single	**SS 2X**	**SS 3X**	**SS SPE/2**	**SS SPE/3**	-
	351120	351130	361120	361130	-
3 station	**KM3N**	**KM3NV**	**KM3N XT/2**	**KM3N XT/3**	**KM3**
	353100	353130	363120	363130	313000
6 station	**KM6N**	**KM6NV**	**KM6N XT/2**	**KM6N XT/3**	**KM6**
	353300	353330	363320	363330	313200

Replacement Parts

1	Handle standard	313101
1a	Handle (sterility test)	313001
2	Handle set screw	313015
3	Pipe plug	313012
4	Hose barb	304507
5	Branch:	
	Standard cup	313010
	Exterior taper	613010
6	Main manifold:	
	Single	361103
	3 station	313003
	6 station	313203
7	Stopcock assembly:	
	2-way	613005
	3-way	313005
8	Flushing manifold (sterility test):	
	3 station	313004
	6 station	313204

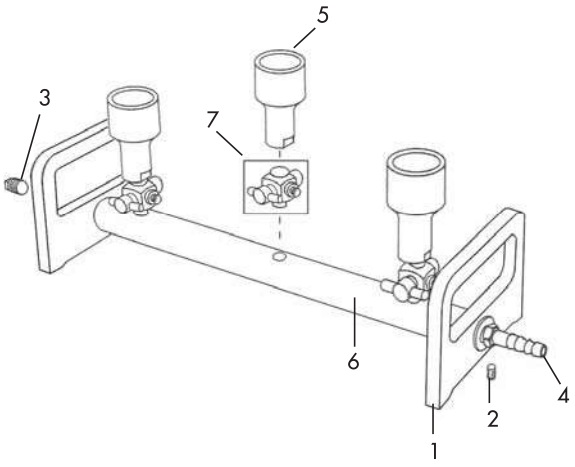

KM3NV
(353130)

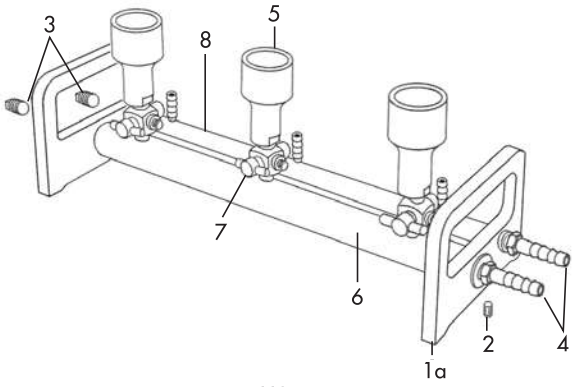

KM3
(313000)

Vacuum Pressure Pump

- Maintains continuous vacuum for filtration
- Also can be used for positive pressure filtration (<60 psi)
- Oil free operation minimizes aerosol contamination
- Quiet operation
- Easy to maintain
- Portable compact design



VP-24 Vacuum Pressure Pump

Specifications

Materials:	
Wetted parts	Aluminum, stainless steel, and Nordell Normax
Valves	Reed type
Power cord	6′ long, 3-wire
Connections:	
Inlet and outlet ports	1/4" NPTF to hose barb fitting connects vacuum pump to 3/8" ID vacuum tubing
Power requirements	115 V, 60 Hz, 4.2 A or 220 V, 50 Hz, 1.9 A
Pressure:	
Maximum pressure	0.41 MPa (60 psi)
Maximum vacuum	81kPa (24Hg") from atm
Temperature:	
Maximum inlet	37.8°C (100°F)
Free air capacity:	34 L/min (1.2 cfm)
Weight:	9.1 Kg (20 lb)

Ordering Information

Model	Description	Catalog No.
VP-24	Vacuum pressure pump, 115 V	800800
	Vacuum pressure pump, 220 V	800801

Replacement Parts

Service kit:	Catalog No.
Replacement head gasket, filter, muffler elements, leaf valves, screws and valve retainers	800810
Vacuum gauge and regulator assembly	800820
Pressure gauge and regulator assembly	800830
Hose barb 3/8"	800840