FOUR E'S SCIENTIFIC

Operating Instructions
操作说明书

OHS-20D / OHS-40D
Overstar20/ Overstar40



Overhead Stirrer
顶置搅拌器

Contents

Declaration of conformity	**2**
Safety instructions	**2**
Correct use	**5**
Unpacking	**6**
Operating instructions	**7**
Switch on and run	**8**
Faults	**9**
Error codes	**9**
Maintenance and cleaning	**9**
Technical data	**10**
Warranty	**11**

Declaration of conformity

We declare under our sole responsibility that this product is in compliance with the regulations 2014/35/EU, 2006/42/EC and 2014/30/EU and conforms to the standards or normative documents: EN 61010-1, EN 61010-1-2-051, EN 61326-1, EN 60529 and EN ISO 12100.

Safety instructions

/// General information

- Read the operating instructions in full before starting up and follow the safety instructions.
- Keep the operating instructions in a place where they can be accessed by everyone.
- Ensure that only trained staff work with the appliance.
- Follow the safety instructions, guidelines, occupational health and safety and and accident prevention regulations.
- Because the options for combining products, tools, stirring vessel, experiment and medium are nearly endless, user safety cannot be ensured simply with design requirements on the part of the product. For example, glass device or other stirring vessels that are sensitive to mechanical stress can be damaged or shattered by an imbalance, increasing the speed too quickly or too little distance between the stirring element and the stirring vessel. Users can suffer serious injury from glass breakage or from the freely rotating stirring element. For this reason, it may become necessary for users to take other precautionary safety measures.
- Only process media that will not react dangerously to the extra energy produced through processing. This also applies to any extra energy produced in other ways, e.g. through light irradiation.
- Do not operate the instrument in explosive atmospheres, with hazardous substances or under water.
- Process pathogenic materials only in closed vessels under a suitable fume hood. Please contact us if you have any question.

⚠ If installation or positioning cannot ensure this access at all times, an additional EMERGENCY STOP switch that can be easily accessed must be in stalled in the work area.

/// Instrument design

- The instrument is not suitable for hand-held operation.
- The high torque requires particular care in the choice of stand, cross sleeve and anti-rotation element for the agitating vessel.
- Set up the stand in a spacious area on an even, stable, clean, non-slip, dry and fireproof surface.
- Ensure that the stirring element is securely clamped in the chuck.
- Use stirring shaft protective equipment.
- The agitated vessels used for stirring have to be secured. Consider on a good stability of the entire structure.

/// Accessories

- Protect the instrument and accessories from bumping and impacting.
- Check the instrument and accessories before hand for damage each time when you use them. Do not use damaged components.
- Safe operation is only guaranteed with the accessories provided by Four E's Scientific.
- Always switch the main switch in the OFF position or disconnect the power before changing stirring element and fitting allowed accessories.

/// Instrument protection

- There may be electrostatic activity between the medium and the output shaft which could cause a direct danger.
- After an interruption in the power supply or a mechanical interruption during a stirring process, the unit does not restart automatically.
- It is important to note that the surfaces of the motor (cooling fins) and certain parts of the bearing may get very hot during operation.
- Never cover the ventilation slots or cooling fins on the motor or on the instrument.
- Avoid knocking and impacting on the lower end of the shaft and the chuck gear teeth. Even minor, invisible damage can lead to imbalance and uneven shaft action.
- Ensure that the stand does not start to move.
- Imbalance of the output shaft, the chuck and in particular the stirring tools can lead to uncontrolled resonant vibrational behavior of the instrument and the whole assembly. Glass apparatus and stirrer containers can be damaged or shattered by this. It can cause injury to the operator, also can damage the rotating stirring tool. In this case exchange the stirring tool for one without imbalance or remedy the

cause of the imbalance. If there is still imbalance, return it to the dealer or the manufacturer along with a description of the fault.

- If the instrument is operated too long in over load or if the ambient temperature is too high, the instrument switches off permanently.
- The machine must only be opened by trained specialists, even during repair. The instrument must be unplugged from the power supply before opening. Live parts inside the instrument may still be live for some time after unplugging from the power supply

/// Experiment procedure

- Please observe the permitted speed for the stirring element. Never set higher speed.
- Make certain that the unit is set at the lowest speed before commissioning; otherwise, the unit will begin running at the speed set in last operation. Gradually increase the speed.
- Pay attention when setting the speed to any imbalance of the stirrer tools and possible spraying of the medium to be stirred.



Never operate the instrument with the stirrer tools rotating freely. Ensure that parts of the body, hair, jewelry or items of clothing cannot be trapped by the rotating parts.



The operation of a free rotating shaft end is dangerous. Therefore, for safety reason, only insert through the stirring tool over the upper edge of housing at standstill.



Wear your personal protective equipment in accordance with the hazard category of the medium to be processed, otherwise there is a risk of:

- splashing of liquids
- projectile parts
- body parts, hair, clothing and jewelry getting caught.



Beware of the risk of:

- flammable materials
- glass breakage as a result of mechanical shaking power.
- agitating vessel breakage as a result of displacement of no-fixed vessel

Reduce the speed if:
- the medium splashes out of the vessel because the speed is too high
- the instrument is not running smoothly
- the instrument begins to move around because of dynamic forces
- an error occurs.
- agitating vessel relative displacement as a result of mechanical resonance

⚠ **Do not touch rotating parts during operation!**

/// Power supply/OFF
• The instrument can only be disconnected from the mains supply by pulling out the mains plug or the connector plug.
• The socket for the mains cord must be easily accessible.
• The voltage stated on the type plate must correspond to the mains voltage.

Correct use

/// Application
• For mixing/stirring liquids with low to high viscosities by various stirring tools. Intended use: Stand device (chuck points down)

/// Range of use
• Laboratories, pharmacies, universities, schools.(indoor use only)
• The safety of the user cannot be guaranteed:
- If the instrument is operated with accessories that are not supplied or recommended by the manufacturer
- If the instrument is operated improperly or contrary to the manufacture's specifications
- if the instrument or the printed circuit board are modified by third parties.
- the voltage used is not correspond to the voltage stated on the type plate

Unpacking

/// Unpacking

- Please unpack the device carefully
- In the case of any damage a detailed report must be sent immediately (post, rail or forwarder).

Note: Do not connect the power supply if the device is visibly damaged.

/// Delivery scope

Items	Qty
Overhead stirrer (including the extension arm)	1
Power cable	1
Propeller stirrer	1
Chuck protector	1
Operating instruction	1

Operating Instructions

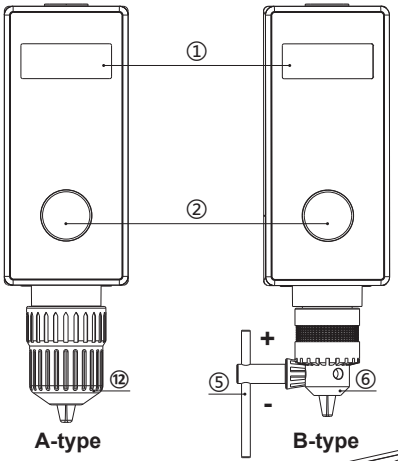

A-type **B-type**

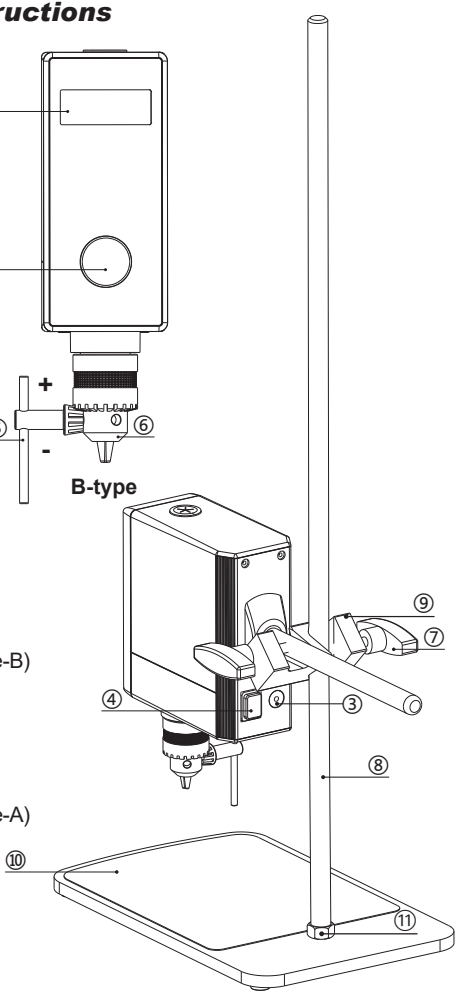

① LED display
② Knob
③ DC Power port
④ Main switch
⑤ Chuck key (Type-B)
⑥ Chuck with key (Type-B)
⑦ Handle (left-right)
⑧ Stainless steel stand
⑨ Cross clamp
⑩ Baseplate
⑪ Nut
⑫ Chuck by hand (Type-A)

/// Securing the universal plate stand

Firstly, manually screw the stainless steel stand (⑧) with the nut (⑪) into the corresponding threaded hole on the baseplate (⑩). Then tighten the nut (⑪) clockwise with your wrench. Finally, check whether the stainless steel rod is firmly fixed on the baseplate.

/// Securing the overhead stirrer to the stand

First secure the cross clamp (⑨) to the stainless steel stand (⑧), and the height of the cross clamp can be adjusted according to different vessel volume, then tighten the handle (left) (⑦). Then secure the extension arm to the other slot of cross clamp (⑨) , and tighten the handle(right) (⑦) above the cross clamp (⑨).

Before use, please check whether the stirrer is firmly fixed. The position of the stirrer can be adjusted only when the instrument is switched off and the stirrer stops working.

/// Securing the stirring shaft

Type-A Chuck: Turn clockwise to loosen the chuck, insert the stirring shaft into the mounting hole of the chuck (⑫), and turn anticlockwise to tighten the chuck (⑫). The stirring shaft can only be changed when stop working and the power supply is disconnected.

Type-B chuck: Turn counterclockwise the chuck key (⑤) to loosen the chuck. Then insert the stirring shaft into the mounting hole of chuck (⑥) and turn clockwise the chuck key (⑤) to tighten chuck. The stirring shaft can only be changed when stop working and the power supply is disconnected.

Switch on and run

• The voltage required by the device must correspond to the mains voltage.

Note: If above condition is met, the device is ready for operation when the main plug is plugged in.
If above condition is not met, safe operation is not guaranteed and the device could probably be damaged.

• After switch on the main switch (④), all the LED display is light and it will display the last setting speed on the screen after a few seconds. Ensure the speed set is suitable for the test medium selected.

• If not sure whether the speed is proper or not , set the speed adjustment knob (②) to the lowest speed (left hand position). Press the knob (②) to start or stop the stirring.

Faults

• The device can't work when switch on.
- Check if the power cord is connected correctly.
- Check if the DC power port is disconnected or loose.

Error codes

Error code	Cause	Error Description	Solutions
Er1	Motor blockage	Motor stops running and the buzzer alarms	Switch off the device, and restart again
Er2	Motor overspeed		
Er3	Motor overload		

Maintenance and cleaning

The device is maintenance-free. It is only subject to the natural wear and tear of components and their statistical failure rate.

Maintenance

Please send the device for repair only after it has been cleaned and is free from any materials which may constitute a health hazard. If you require service, return the instrument in its original packaging.If the original packaging is not sufficient. Please also use suitable transport packaging.

Cleaning

- Disconnect the main plug when cleaning!
- Wear protective gloves during cleaning the instruments.
- Electrical instruments may not be placed in the cleansing agent for the purpose of cleaning.
- Do not allow moisture to get into the instrument when cleaning.
- Use only cleaning agents which have been approved by us to clean our instruments.

Dyes	isopropyl alcohol
Constructions materials	water containing tenside / isopropyl alcohol
Cosmetics	
Foodstuffs	water containing tenside
Fuels	water containing tenside

For materials which are not listed, please request information from our application support.

Technical data

Model	OHS-20D	OHS-40D
Voltage [V]	100 V-240V	100 V-240V
Frequency [Hz]	50/60	50/60
Max. input power [Hz]	72	145
Speed range under nominal load [rpm]	0/50-2000	0/50-2000
Speed increment [rpm]	Stepless, 10rpm	Stepless, 10rpm
Speed accuracy	±1%	±1%
Max. torque at stirrer shaft [N.cm]	20	40
Max. stirring quantity (H_2O) [L]	20	40
Max. Viscosity [mPas]	10,000	50,000
Speed display	LED	LED
Protection class according to DIN EN 60529	IP42	IP42
Protection at overload	Yes	Yes
Motor protection	Yes	Yes
Permissible ambient temperature [℃]	5-40	5-40
Permissible relative humidity [%]	80	80
Clamping chuck-clamping range [mm]	0.5-10	0.5-10
Dimensions (WxDxH) (without extension arm) [mm]	71x174x240	71x174x240
Weight (with extension arm and clamping chuck) [kg]	2.3	2.5

Warranty

You have purchased an original laboratory machine which meets the highest engineering and quality standards. In accordance with our warranty conditions, the warranty period is 24 months from our shipment. For claims under the warranty, please contact your local dealer. You may also send the machine directly to our works, enclosing the delivery invoice and giving reasons for the claim. You will be liable for freight costs.

The warranty does not cover worn out parts, nor does it apply to faults resulting from improper use, insufficient care or maintenance not carried out in accordance with the instructions in this operating manual.

目 录

符合性声明	13
安全说明	13
正确使用	15
开箱	16
操作说明	17
开机运行	18
故障排除	19
错误代码	19
清洁与维护	19
技术参数	20
保修	20

符合性声明

我公司自行负责声明本产品符合 2014/35/EU, 2006/42/EC,2014/30/EU 和 2011/65/EU指令，并符合以下标准或标准性文档：EN 61010-1, EN 61010-2-010, EN 61010-2-051,EN 61326-1, EN 60529 和 EN ISO 12100.

安全说明

/// 一般信息

- 操作仪器前请认真阅读使用说明并遵守安全操作规范。
- 请将本使用说明放置于使用者方便查阅的地方。
- 确保只有受过相关训练的人员才能操作本仪器。
- 请遵守安全规范、人身安全和事故防止等相关规范。
- 由于不同的实验中可能选择使用各种仪器、搅拌桨、搅拌容器以及不同的介质；我们无法仅仅通过产品的安全设计保证使用者的安全；例如：玻璃器皿或其他搅拌容器可能由于机械应力的作用而破碎；可能因其放置不稳而打碎；也可能因加速过快或者搅拌桨和搅拌容器间隙过小导致其破碎。破碎的玻璃容器或者转动的搅拌桨都有可能伤害到使用者。因此，操作人员需要采取其他的安全防护措施。
- 本仪器仅适用于对处理过程中产生的能量不发生危险反应的介质；同时被处理的物质也不能与其他方式产生的能量反应，如光照。
- 请勿在易爆的环境或水下操作使用本仪器；请勿使用本仪器处理危险的介质。
- 处理病原体介质时，请使用密闭容器并在合适的通风橱中进行。如有其他问题，请联系厂家应用人员。

⚠ 如果仪器的安装或放置场所无法确保电源关闭开关可被随时关闭，必须在工作区域安装操作便利的紧急关闭开关。

/// 仪器设计

- 本仪器不适合手持操作。
- 由于本仪器所输出力矩较大，需特别注意选择和使用支架、夹头以及防止搅拌容器转动的容器固定夹。
- 将仪器支架放置于宽敞、平坦、平稳、清洁、防滑、干燥和防火的台面。
- 确保搅拌桨被正确、牢固地安装于钻夹头中。
- 请使用钻头夹头硅胶防护罩。
- 搅拌容器必须固定，另外请注意整个装置的稳定性。

/// 选配件

- 确保仪器和配件免受挤压和碰撞。
- 每次使用前请检查仪器和配件并确保无损，请勿使用损毁的仪器和配件。
- 只有使用机器原装选配件才可确保安全。
- 更换搅拌桨以及安装配件前，必须将电源开关置于关闭位置或者断开电源。

/// 仪器保护

- 搅拌输出轴和介质间可能存在的静电可产生直接的危险。
- 搅拌过程中出现电源中断或者机械中断后仪器不会自动重启。
- 请注意操作中马达表面(散热片)和轴承的某些部分可能处于高温状态。
- 请勿堵塞仪器或马达上的通风槽以及散热片。
- 请勿撞击搅拌桨的底端部位以及钻夹头棘齿，即便是轻微的损坏都可能导致搅拌桨输出轴的不平稳。
- 请确保设备支架台不会因仪器搅拌而移动。
- 输出轴和钻夹头尤其是搅拌桨的不平衡可导致仪器和整个装置共振从而导致玻璃器具和搅拌容器的破碎。这有可能对操作者造成伤害，也可能损坏搅拌桨。该情况下，请更换搅拌桨以矫正所出现的不平衡。如果更换搅拌桨后问题没有改善，请附问题说明将问题设备仪器发送至您的销售商或厂家检查。
- 如果仪器长时间过载操作或者周边温度过高，仪器会自动关闭电机停止工作。
- 即使在维修时，也只有经过专门培训的专业人员才能打开仪器。打开仪器前，请拔下电源。仪器拔下电源后内部某些带电部件可能仍处于带电状态，请静止一段时间后再打开仪器。

/// 实验步骤

- 请遵守对应搅拌桨允许的转速范围，请勿设置过高的转速。
- 仪器调试前，确保调速旋钮被置于最低转速位置，否则仪器将以上次所设定的转速运转。提高转速时需均匀拨动旋钮逐渐升高转速，提高转速时需实时观察仪器和容器变化。
- 设置转速时，请注意避免搅拌桨转动不平稳以及可能出现的介质溅出。

⚠ 请勿空载操作转动中的仪器。确保身体各个部位、头发、首饰或衣物不可被转动部件勾住或缠绕，如出现突发情况请及时断开电源开关。

⚠ 自由旋转的搅拌杆顶端会产生危险；因此，出于安全的考虑，只有静止时仪器搅拌杆才能伸出仪器外壳上部，请勿在通电状态下触碰搅拌杆。

⚠ 根据所处理的介质种类，在操作仪器时请佩戴合适的防护装备；注意以下可能出现的危险：
- 液体溅出。
- 零部件飞出。
- 身体、头发、衣物被勾住。

⚠ 请注意下列危险：
- 易燃介质
- 由于机械震荡导致的玻璃容器的破碎。
- 由于容器没有固定发生位移导致容器破碎。

出现以下状况时，请降低转速：
- 由于转速过高导致液体溅出。
- 仪器转动不平稳。
- 由于动力导致仪器开始移动。
- 仪器出现故障。
- 机器共振导致容器发生相对位移。

⚠ **操作中请勿触摸转动的部件！**

/// 电源/关机
- 只有拔下仪器电源插头才能完全切断电源。
- 电源插座必须易于操作.
- 输入电压必须与仪器铭牌上标示的电压一致。

正确使用

/// 应用
- 通过配置不同的搅拌桨可用于混合/搅拌低粘度到高粘度的液体介质。
  设计用途：固定于支架 (钻夹头朝下)。

/// 使用区域
- 在实验室、制药、大学、商业或工业领域中的实验室式的室内环境。
- 出现下列情况时我们将无法确保使用者的安全：
- 如果使用了非厂家提供或推荐的选配件。
- 如果仪器操作有误或者违反了厂家的操作规范。
- 如果仪器或者电路板被第三方非法修改。
- 使用的电压与仪器铭牌上标示的不一致。

开箱

/// 开箱检查

- 请小心拆除包装并检查仪器
- 如果发现仪器有任何破损，请填写破损报告说明并立即通知销售商或货运公司。

⚠ **注意：如果设备有明显损坏，请不要连接电源线**

/// 包装清单

项目	数量
主机（含支臂杆）	1
电源适配器	1
四叶搅拌桨	1
夹头保护套	1
用户手册	1

操作说明

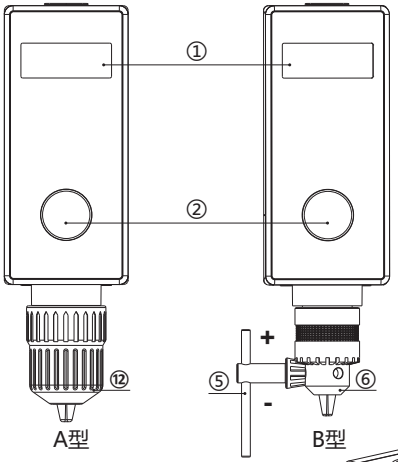

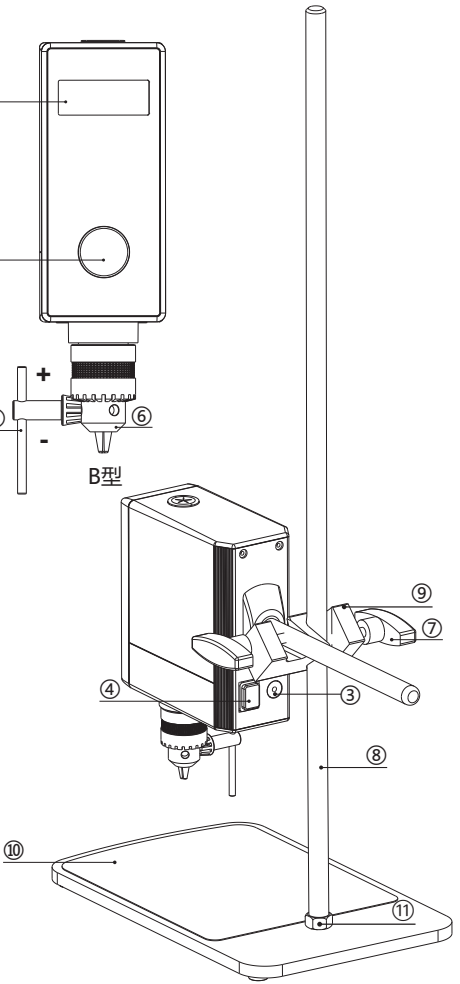

①LED显示
②调节旋钮
③DC插座
④电源开关
⑤夹头钥匙（B型）
⑥带钥钻夹头（B型）
⑦手拧把手
⑧不锈钢杆
⑨十固定夹
⑩底板
⑪螺母
⑫手拧钻夹头（A型）

///安装设备支架台

首先将带有螺母（⑪）的不锈钢杆（⑧）手动按照对应的螺纹孔旋进设备架底板（⑩）上，然后使用活动扳手（需自备）将螺母（⑪）顺时针方向拧紧。最后检查不锈钢杆是否牢固固定在底板上。

///将搅拌器主机固定于支架

首先将十字固定夹（⑨）固定在不锈钢杆（⑧）上高度根据容器体积需求调节，调节好高度之后拧紧手拧把手（⑦），将搅拌器主机支臂杆固定在十字固定夹（⑨）另外一个槽上，拧紧十字固定夹（⑨）上面的手拧把手（⑦）。

使用前，请检查搅拌器是否牢固的固定在所需的位置，并周期性的检查。只有当搅拌器停止运转，电源断开时才可以调整搅拌器位置。

///固定搅拌桨

A型夹头：顺时针转拧松夹头，将搅拌桨杆插入A型手拧钻夹头（⑫）安装孔位，逆时针转拧紧手拧钻夹头（⑫）。只有在仪器停止运转并断开电源时才可以更换搅拌桨。

B型夹头：使用夹头钥匙（⑤）逆时针拧松夹头，将搅拌桨杆插入钻夹头（⑥）安装孔位，使用夹头钥匙（⑤）扳手顺时针拧紧钻夹头。只有在仪器停止运转并断开电源时才可以更换搅拌桨。

试运行

- 确保机器所需电压符合电源电压。

注：如果符合上述条件，插上电源即可开启仪器进行操作。
如果上述条件未能满足，将无法保证安全操作，有可能导致仪器损坏。

- 打开仪器电源开关（④），所有 LED 显示（①）亮起，然后，几秒后屏幕显示上次操作的转速设定值。确保速度设定值适于所处理的介质。
- 如果无法确定转速是否适中，将调速旋钮（②）旋转至最低转速位置(左手位置)。按下调速旋钮（②）启动或者关闭搅拌功能。

故障排除

• 开机时设备无法工作
  - 检查电源线是否连接正确
  - 检查DC插头是否断开或松动

错误代码

错误代码	错误描述	现 象	解决方案
Er1	电机堵转	马达停止转动 蜂鸣器报警	关闭电源 重新启动
Er2	电机转速过高		
Er3	电机负载过高		

清洁与维护

本仪器无需特殊保护。只会出现零部件的自然磨损及磨损后可能的偶然统计失效。

维修

在送检您的仪器之前，请先清洁并确保仪器内无任何对人健康有害的物料残留。
如需维修服务,请使用原包装箱妥善包装后将仪器寄回。如原包装不存在时请采用合适的包装。

清洁

- 清洁仪器须断开电源!
- 清洁仪器时请佩戴防护手套。
- 清洁时，请勿将电子设备放置于清洁剂中。
- 清洁时，请勿让潮气进入仪器。
- 清洁仪器时请仅用本公司认可的清洁液: 含活性剂的水溶液和异丙醇。

染料	异丙醇
建筑材料	含活性剂的水溶液/异丙醇
化妆品	含活性剂的水溶液/异丙醇
食品	含活性剂的水溶液
燃料	含活性剂的水溶液

当采用其他非本公司推荐的方法时，请先向我们确认清洁方法不会损坏仪器。

技术参数

型号	Overstar20	Overstar40
输入电压V	100 V-240V	100 V-240V
频率[Hz]	50/60	50/60
最大输入功率W	72	145
额定负载时转速范围	0/50-2000	0/50-2000
调速/步幅（rpm）	无极调速，步幅10rpm	无极调速，步幅10rpm
转速精度偏差	±1%	±1%
搅拌输出轴最大扭矩N.cm	20	40
最大搅拌量（H_2O）[L]	20	40
最大粘度mPas	10,000	50,000
转速显示	LED	LED
保护等级DIN EN60529	IP42	IP42
过载保护	是	是
电机保护	是	是
允许环境温度℃	5-40	5-40
允许环境湿度%	80	80
钻夹头夹持范围mm	0.5-10	0.5-10
尺寸（W*D*H）无支臂杆mm	71x174x240	71x174x240
重量（含夹头和支臂杆）kg	2.3	2.5

保 修

根据本公司保修规定本机保修 2 年。保修期内如果有任何问题请联络您的供货商，您也可以将仪器附发票和故障说明直接发至我们公司，经我方事先确认后运费由贵方承担。保修不包括零件的自然磨损，也不适用于由于过失、不当操作或者未按操作说明书使用和维护引起的损坏。