Product Description

ATP2000P micro spectrometer is a high-performance, miniature fiber-optic spectrometer. The 2048-pixel CCD allows the spectrometer to work for the range from 180-1100nm. High A/D converter frequency and high-speed data transmission of this spectrometer makes it perfect for fast detection applications. The spectrum data can be exported through USB2.0 or RS232 interface. ATP2000P operates with a single +5VDC supply from USB or duo-pin interface.

Key Features

- Max spectral region: 180-1100 nm
- Spectral resolution: 0.2-5 nm
- Optical configuration: crossed Czerny-Turner
- Linear low noise CMOS detector with 2048 pixel
- Integration times: 0.1ms-256s
- Supply voltage: 5VDC (USB Power)
- 16 bit, 2MHz A/D Converter
- Interface: USB2.0 (High speed)
- 20-pin connector for interfacing to external products

Typical Applications

- LED spectrophotometer
- Fluorescence
- Biochemical analyzer
- Transmittance detection
- Reflectance detection

1. Performance Specification

Detector	
Type	Linear array detector
Detectable range	200-1100 nm
Effective pixel	2048
Pixel dimension	14μm×200μm
Sensitivity	1300 V/(lx·s)
Dark noise	13 RMS @ 13 ˚C
Optical Parameter	
Wavelength range	200-1100 nm
Optical resolution	0.2-5 nm
Signal-to-noise	>1800:1
Dynamic range	8.5 x 10^7 (system); 2000:1 for a single acquisition
Stray light	<0.05% at 600 nm; <0.09% at 435 nm
Working temperature	-25-50 ℃
Working humidity	< 90%RH
Optical Configuration	
Optical Design	f/4 crossed asymmetrical Czerny-Turner
Focal Distance	40 mm for incidence / 60 mm for output
Incidence slit	50μm (25, 100μm are optional)
Incident Interface	SMA905 connector
Electrical Parameter	
Integration time	0.1ms - 256 second
Interfaces	USB 2.0
A/D conversion resolution	16 bits
Supply voltage	DC4.5 to 5.5 V (type @5V)
Operating current	170mA@Typical
Storage temperature	-30°C to +70°C
Operating temperature	-25-50 ℃
Physics Parameter	
Dimension	102×72×34 mm^3
weight	0.2 kg
Sealing	Anti-sweat

2. Performance

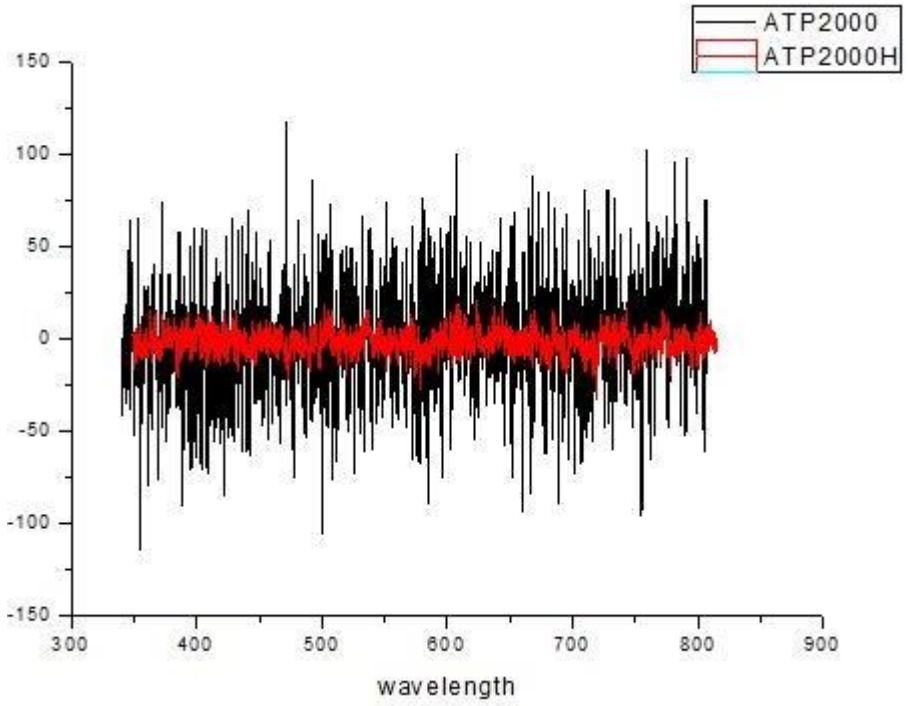

Figure 1 The noise of ATP2000P/ATP2000H (Red) vs ATP2000 (Black)

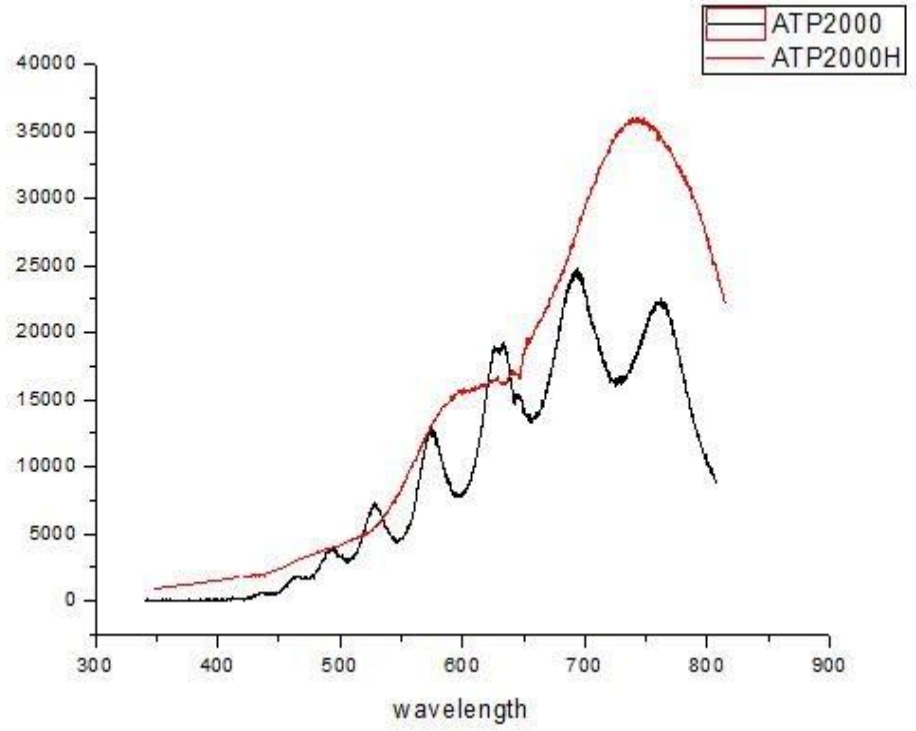

Figure 2 The sensitive of ATP2000P/ATP2000H (Red) vs ATP2000 (Black)

3. Mechanical Diagrams

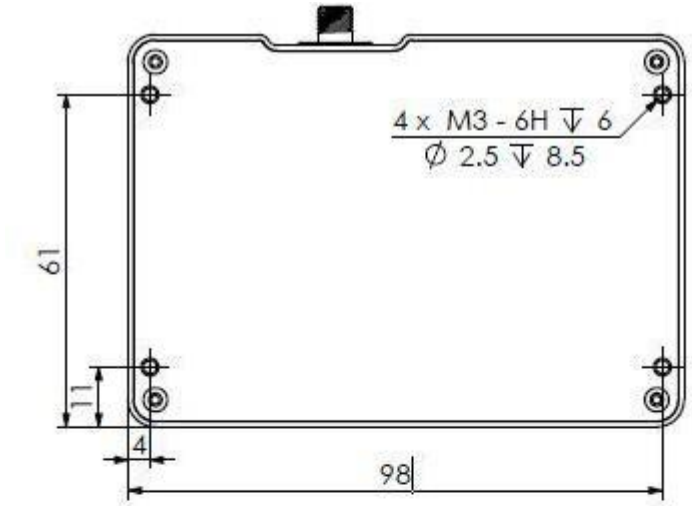

Mounting Holes (M3 X 4)

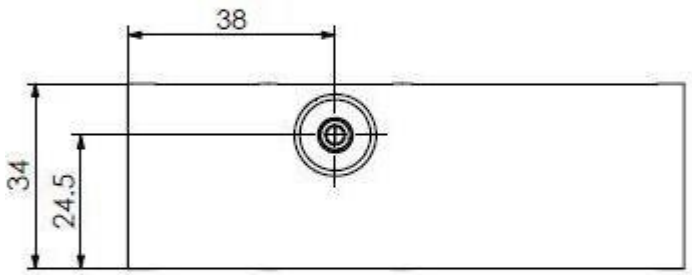

SMA905 Female Fiber interface

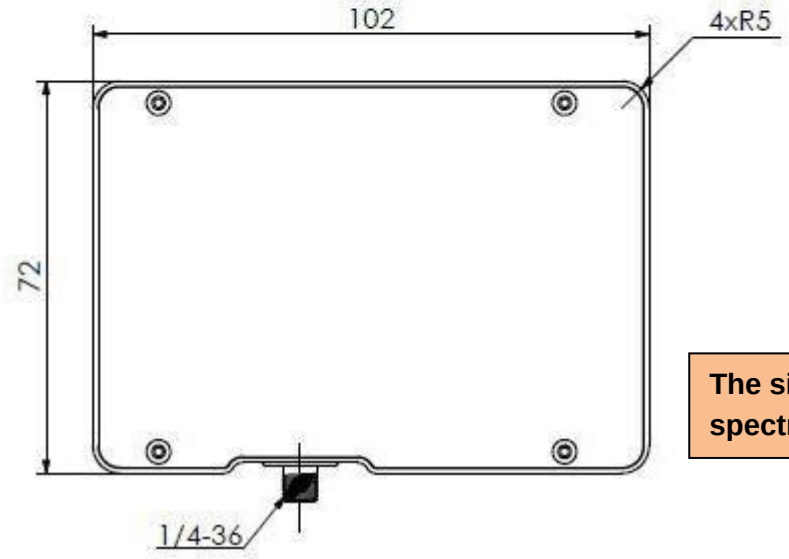

The size of ATP2000 micro spectrometer

4. Electrical Pin-out

Table 1 Electrical Characteristics

Parameter	Min	Typical	Max	Unit
Power Supply				
Operating voltage range	4.5	5	5.5	V
Operating current		170		mA
Logic Inputs (3.3V LVTTL, Five-volt tolerant)				
High level input voltage	1.7		3.6	V
Low level input voltage	-0.3		1.0	V
Logic Output (3.3V LVTTL)				
High level output voltage	2.4			V
Low level output voltage			0.4	V

.

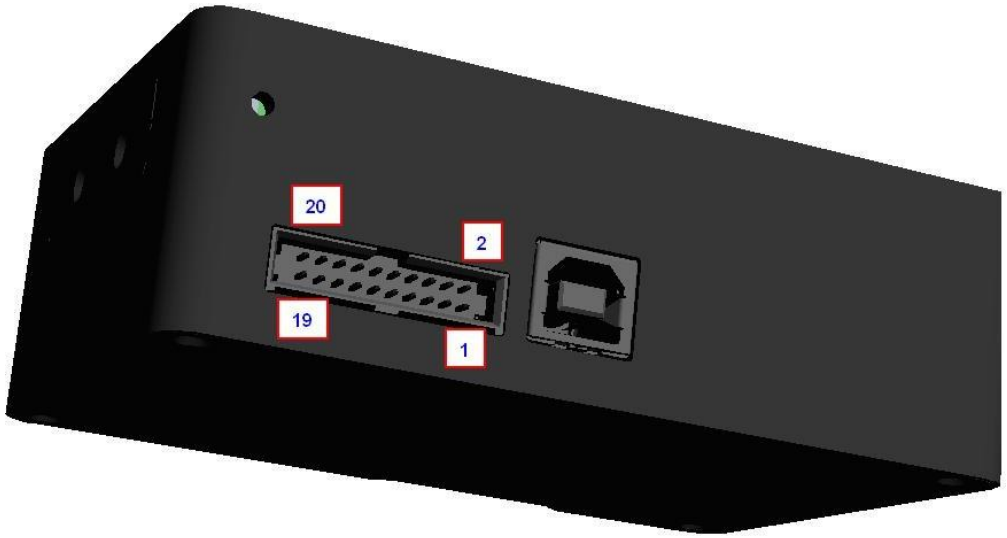

Table 2 Electrical Pin-Out

Pin#	Description	I/O	Function Description
1.	VCC	/	Power Supply, 5V±0.5,
2.	GND	/	Ground
3.	RS232_TX	Output	RS232 Transmit signal
4.	RS232_RX	Input	RS232 Receive signal
5.	Lamp_En	Output	LVTTL output the lamp enable signal.
6.	Continuous strobe	Output	LVTTL output the continues strobe signal.
7.	Ext_trigger_in	Input	LVTTL input the trigger signal.
8.	Single_strobe	Output	LVTTL output the single strobe signal.
9.	SPI_SCK	Output	The SPI Clock signal for communications to other SPI peripherals
10.	SPI_MOSI	Output	The SPI Master Out Slave In (MOSI) signal for communications to other SPI peripherals
11.	SPI_MISO	Input	The SPI Master In Slave Out (MISO) signal for communications to other SPI peripherals
12.	SPI_CS	Output	The SPI Chip/Device Select signal for communications to other SPI peripherals
13.	GPIO0	Input / Output	General Purpose Software Programmable Digital Inputs/Outputs, LVTTL Logic.
14.	GPIO1	Input / Output	General Purpose Software Programmable Digital Inputs/Outputs, LVTTL Logic.
15.	GPIO2	Input / Output	General Purpose Software Programmable Digital Inputs/Outputs, LVTTL Logic.
16.	GPIO3	Input / Output	General Purpose Software Programmable Digital Inputs/Outputs, LVTTL Logic.
17.	GPIO4	Input / Output	General Purpose Software Programmable Digital Inputs/Outputs, LVTTL Logic.
18.	GPIO5	Input / Output	General Purpose Software Programmable Digital Inputs/Outputs, LVTTL Logic.
19.	GPIO6	Input / Output	General Purpose Software Programmable Digital Inputs/Outputs, LVTTL Logic.
20.	GPIO7	Input / Output	General Purpose Software Programmable Digital Inputs/Outputs, LVTTL Logic.

.

5. Order Guide

Order number Rules:

Model	Spectral region		Slit width	
ATP2000P	Short wavelength	Long wavelength	Slit width	

For example:

What to buy ATP2000P, spectral region: 200-850nm, slit width is 50um, then the order no is: **ATP2000P-200-850-050.**

Order No	Spectral region	Slit	
ATP2000P-200-400-###	200~400	10μm	
ATP2000P-200-850-###	200~850	25μm	
ATP2000P-200-1100-###	200~1000	50μm	
ATP2000P-340-850-###	340~850	100μm	
ATP2000P-600-1100-###	600~1100	200μm	
ATP2000P-###-###-###	Other	Other: ~μm	

6. Derivation

PN	Description
ATP2000	Basic type
ATP2000P	The high-performance version
ATP2000H	High speed to 2Kfps