Product Description

ATP5030/4 is a cooled, ultra-high resolution micro spectrometer, which is based on the M-type optical path structure. It uses a cooled 2048- or 4096-pixel linear array detector to achieve the ultra-high resolution (up to 0.05nm). It features high reliability, ultra-high speed and cost-effectiveness and is widely used in environment applications, such as online testing.

ATP5030 can receive SMA905 optical fiber input light or free space light and output the measured spectrum data through USB2.0 or UART port. It only requires 5VDC power supply, making it easy to be integrated.

	Detector pixels	
ATP5030	2048	
ATP5034	4096	
ATP5030P	2048	Cooled, Back-thinned CCD

Key Features

- Detector cooling temperature: -5C
- M type optical path, higher resolution
- Spectral range: 200-1100 nm
- Spectral resolution: 0.05-2 nm
- Optical path structure: non-crossing C-T
- Detector: 2048 or 4096 pixels
- Integration time: 0.1ms -256s
- Power supply: 5VDC power supply
- ADC bit depth: 16 bits
- Data output interface: USB Type-C
- 20-pin expansion interface.

Typical Applications

- LIBS, Plasma luminescence detection
- Raman spectroscopy detection
- Wavelength monitoring, laser, LED and other luminous bodies.
- Water quality analyzer
- UV flue gas analyzer
- LED sorting machine, color detection
- Spectral analysis, radiation spectroscopic analysis, spectrophotometric analysis
- Reflection and transmission spectrum detection.

1. Performance Specifications

Detector	
Type	Linear array detector
Detectable range	200-1100 nm
Effective pixel	2048 or 4096 pixels
Sensor Cooled	TEC cooled, -5 ˚C
Pixel dimension	14μm × 200μm
Sensitivity	1300 V/(lx·s)
Dark noise	13 RMS @ 13 ˚C
Optical Parameter	
Wavelength range	200-1100 nm
Optical resolution	0.07-3 nm
Signal-to-noise	>600:1
Dynamic range	8.5 x 10^7 (system); 2000:1 for a single acquisition
Stray light	<0.05% at 600 nm; <0.09% at 435 nm
Optical Configuration	
Optical Design	Czerny-Turner
Focal Distance	75mm
Incidence slit	50μm (10, 25, 100, 200μm are optional)
Incident Interface	SMA905 connector
Electrical Parameter	
Integration time	0.1ms - 256 second
Interfaces	USB Type-C
A/D conversion resolution	16 bits
Supply voltage	DC4.5 to 5.5 V (type @5V)
Operating current	1.5 A @Typical. 3A Max
Storage temperature	-30°C to +70°C
Operating temperature	-25 ～ 50C
Working humidity	< 90%RH
Physics Parameter	
Dimension	135 × 99 × 46 mm
weight	0.5 kg
Sealing	Anti-sweat

2. Mechanical Drawings

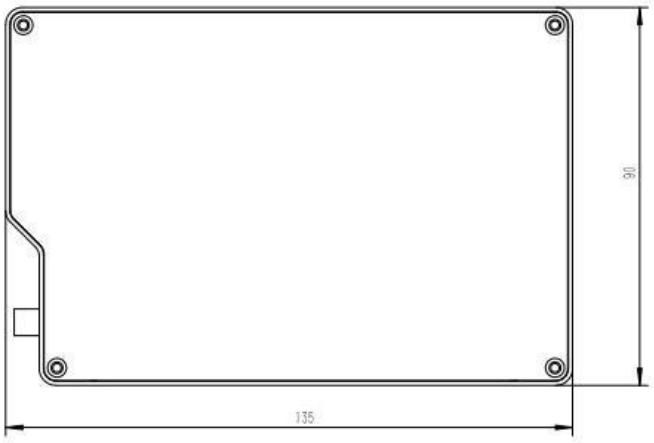



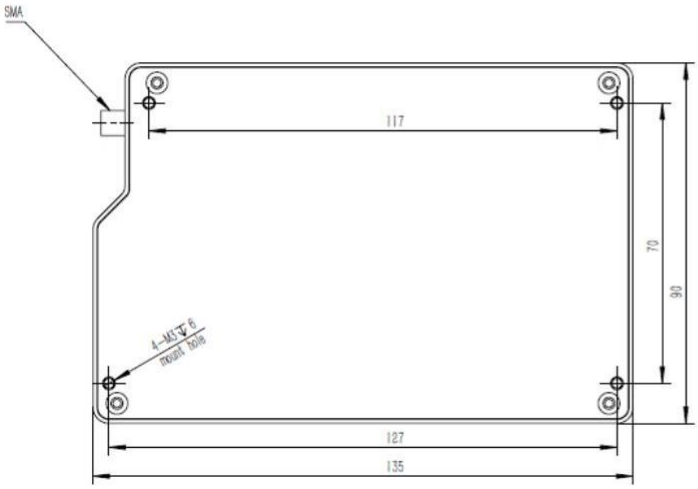

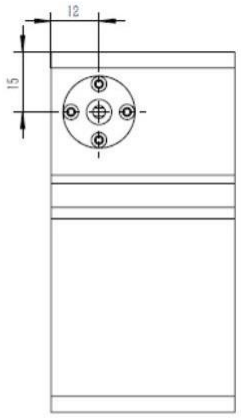

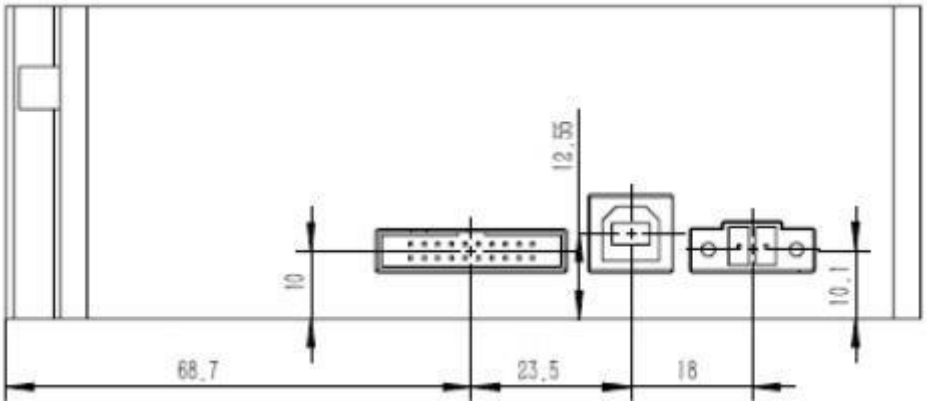

3. Electrical Pin-out

Table 1 Electrical Characteristics

Parameter	Min	Typical	Max	Unit
Power Supply				
Operating voltage range	4.5	5	5.5	V
Operating current		170		mA
Logic Inputs (3.3V LVTTL, Five-volt tolerant)				
High level input voltage	1.7		3.6	V
Low level input voltage	-0.3		1.0	V
Logic Output (3.3V LVTTL)				
High level output voltage	2.4			V
Low level output voltage			0.4	V

The module is equipped with a 30-pin male angled box header (2x15, 2.00 mm pitch) and Type-C interface.

Table 2 Electrical Pin-Out

Pin#	Description	I/O	Function Description
1.	VCC	/	Power Supply, 5V±0.5,
2.	GND	/	Ground
3.	UART_TX	Output	UART Transmit signal
4.	UART_RX	Input	UART Receive signal
5.	Lamp_En	Output	LVTTL output the lamp enable signal.
6.	Continuous_ strobe	Output	LVTTL output the continues strobe signal.
7.	Ext_trigger_in	Input	LVTTL input the trigger signal.
8.	Single strobe	Output	LVTTL output the single strobe signal.
9.	SPI_SCK	Output	The SPI Clock signal for communications to other SPI peripherals
10.	SPI_MOSI	Output	The SPI Master Out Slave in (MOSI) signal for communications to other SPI peripherals
11.	SPI_MISO	Input	The SPI Master Out Slave in (MOSI) signal for communications to other SPI peripherals
12.	SPI_CS	Output	The SPI Chip/Device Select signal for communications to other SPI peripherals
13.	GPIO0	Input/output	General Purpose Software Programmable Digital Inputs/Outputs, LVTTL Logic.
14.	GPIO1	Input/output	General Purpose Software Programmable Digital Inputs/Outputs, LVTTL Logic.
15.	GPIO2	Input/output	General Purpose Software Programmable Digital Inputs/Outputs, LVTTL Logic.
16.	GPIO3	Input/output	General Purpose Software Programmable Digital Inputs/Outputs, LVTTL Logic.
17.	GPIO4	Input/output	General Purpose Software Programmable Digital Inputs/Outputs, LVTTL Logic.
18.	GPIO5	Input/output	General Purpose Software Programmable Digital Inputs/Outputs, LVTTL Logic.
19.	GPIO6	Input/output	General Purpose Software Programmable Digital Inputs/Outputs, LVTTL Logic.
20.	GPIO7	Input/output	General Purpose Software Programmable Digital Inputs/Outputs, LVTTL Logic.

4. Order Guide

Order number Rules:

Model	Spectral region		Slit width	
ATP5030	Short wavelength	Long wavelength	Slit width	

For example:

What to buy ATP5030, spectral region: 200-1000nm, slit width is 50 um, then the order no is: **ATP5030-200-1000-050**

Order No	Spectral region	Slit	
ATP5030-200-400-###	200~400	10μm	
ATP5030-200-850-###	200~850	25μm	
ATP5030-200-1000-###	200~1000	50μm	
ATP5030-340-850-###	340~850	100μm	
ATP5030-600-1100-###	600~1100	200μm	
ATP5030-###-###-###	Other	Other:_____μm	