Shenchen Precision Pump
Manual of Lab F Series

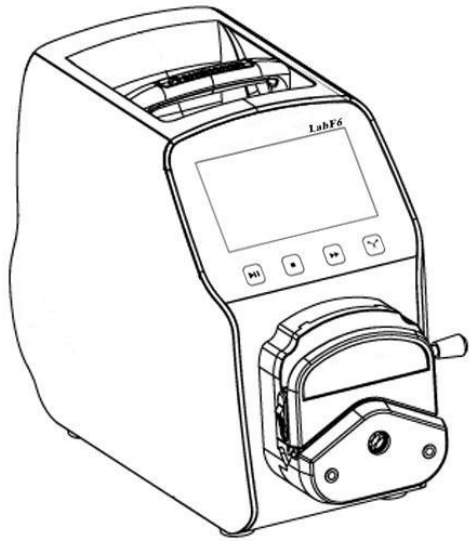

Baoding Shenchen Precision Pump Co.,Ltd.



Important Information

- Please read the manual carefully before operating the product.



Warning

- Tubing may have crack due to wear. It results in the overflow of fluid from tubing. In that time human body and instruments may be damaged. So user must check usually and change tubing in time
- Connect directly the power line to the wall socket, and avoid using the extense electric line.
- If the power line or plug had wear and other damage, please hold the plug to unplug it, not hold the line.
- If following situations happened, please turn off the electric power and unplug the plug, holding the plug and not the line.

  1. Fluid splash on the pump.
  2. You think the pump need to maintain or amend.
- The user's power socket must have ground wire, and have reliable grounding.

Note: When connect external control or foot pedal switch, must turn off the pump.

Catalog

1. Lab F Series Product Introduction …….....…..….- 1 -
2. Lab F Series Product Appearance…….....…...….....……..- 1 -
3. Lab F Series Keyboard Instruction …….....……...…….....……- 2 -
4.Lab F Series Interface Composition …….. .....……...…- 2 -
4.1.Booting Interface…….....……..- 3 -
4.2.Main Interface…….....……..…..…..……..- 3 -
4.3.Basic Configuration Interface…….....…….….....……..- 5 -
4.4.Mode Setting Interface. …….....……...…...……- 5 -
4.5.Back Suction Angle Setting Interface…….....…….....…...…..- 6 -
4.6.Common Mode Interface …….....……- 6 -
4.7.Communication Setting Interface…….....….....…..……- 7 -
4.8.Flow Rate Calibration Interface…….....….....……-8 -
4.9. Real-time Monitor Interface…….....……...…...…… -9 -
4.10.Volume Dispensing interface…….....…….....…….…- 10 -
4.11. Speed Dispensing interface...…….....…….....…..- 11
4.12.Date and Time Setting Interface …….....…….....…...…- 12 -
5.External Control Interface Instruction……...…… .....- 13 -
6. Lab F Series Technical Specification…….....…….- 18 -
7. Lab F Series Main Function and Features…….....- 19 -
8.Product Dimension …….....…..- 20 -
9. Maintenance …….....……..- 21 -
10. Warranty and After Sales Service …….....……..- 22 -

1. Lab F Series Product Introduction

Lab F series peristaltic pump, with 4.3 inch color touch screen control, graphical interface, dynamic display working status. Display filling data, system setting parameters in same screen. Suitable for non-pollution and high precision liquid filling. The filling accuracy can reach 0.5%~1%. It can load different pump head.

2. Lab F Series Product Appearance

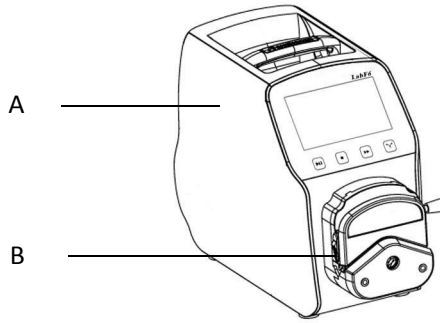

A——Drive

B——Pump Head

C——Power Switch

D——Power Socket

E——External Control Input Port

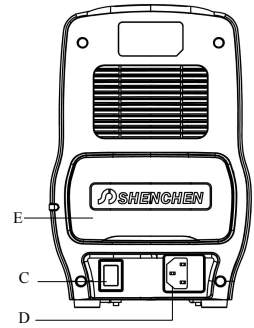

3. Lab F Series Keyboard Instruction

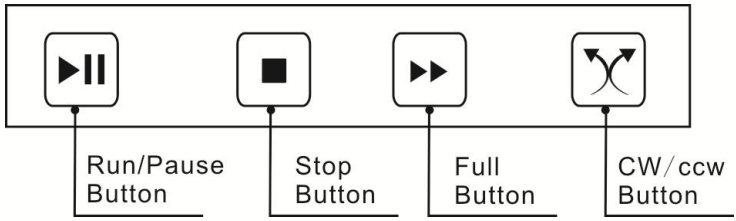

Run/Pause button: In dispensing mode, after setting the dispensing datas, press start/stop button, the pump start work; press start/stop button again, pause the current working. After press the start/stop button, except calibration and monitor button all other buttons on main interface become gray, can not use.

In transferring mode, press start/stop button, pump start working, now it does not have pause function.(In system setting interface, users can select working mode: dispensing mode or transferring mode.)

Stop Button: Press stop button, pump stop working. The main interface disable status button becomes available.

Full Speed Button: Press this button when pump stop working, it will working will full speed. This function can be used for washing tube or fast fill liquid.

CW/CCW Button: Press this button, the motor will change running direction.

4. Lab F Series Interface Composition

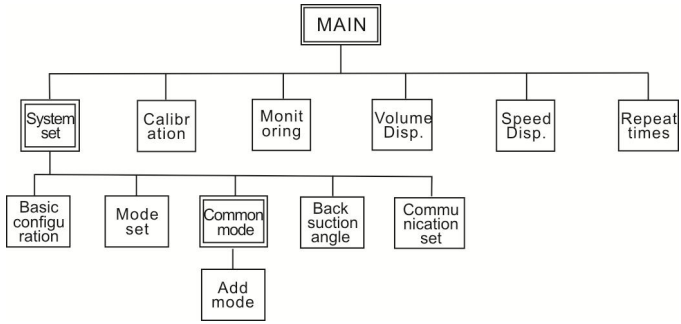

Lab F Series Operation Interface Instruction:

4.1 Booting Interface:

After power on the system,it will enter the English main interface after 2.5 seconds automatically.

4.2 Main Interface:

Main interface composition as below:

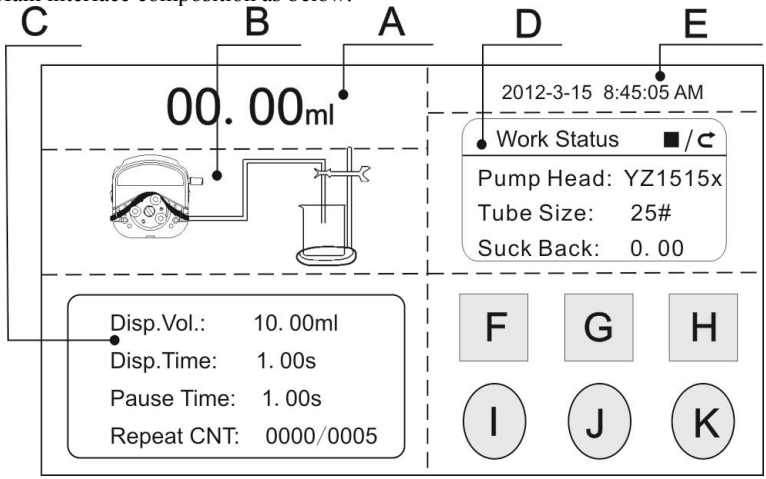

A. Real-time Display Volume: In system setting interface, choose working mode and display data. In transferring mode, display motor speed or flow rate， can change motor speed or flow rate when click A area. In dispensing volume mode, display filling volume or total filling numbers,select start button,display the current value in real time . In speed dispensing mode, display the motor speed or total filling numbers,select start button,display the current value in real time.

B. Real-time Dynamic Display: Display the dispensing and transferring state and monitor result. Click pump head can display the SN code of this pump.

C. Real-time Parameter Display

In dispensing mode: Display dispensing parameters, include dispensing volume(Dis. Volume mode) or dispensing speed(Dis. Speed mode) , current

dispensing time count down, current pause time count down, copy numbers.

In transferring mode: Display the current transferring total volume, and current working time. The total transferring volume maximum is 9999L. The current working time maximum is 9999 hour. Each one of it reach the limit, both data will back to zero. Also can set the data back to zero in the system setting.

D. Setting Parameter Display: This area display current working state, pump head, tubing size and suck-back angle

E. Date and Time Display: Display the current date and time, can revise it in system settings.

F. System Setting Button: Press this button enter system setting interface, can set the pump head, tube size, back suction angle and common mode,

G. Flow Calibration Button: Press this button enter calibration interface.

H. Real-time Monitor Button: Press this button enter monitor interface, you can check the flow rate, motor speed and dispensing efficiency here.

I. Volume Dispensing Button: Press this button, the numerical keyboard come out, input the dispensing volume here. If in transferring mode, it is forbidden.

J. Speed Dispensing Button: Press this button, the numerical keyboard come out, input the dispensing speed here. If in transferring mode, it is forbidden.

K. Copy Numbers Button: Press this button, the numerical keyboard come out, input the copy numbers. If input '0', the copy number is unlimited. In transferring mode, it is forbidden.

4.3 Basic Configuration Interface as below:

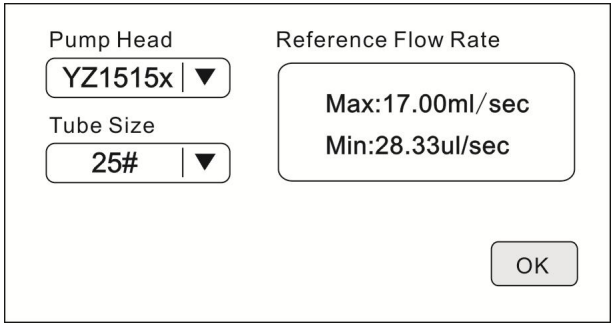

In main interface, click ' **System setting**' button, click '**Configuration**' button, enter basic configuration interface. Click pump head, tubing size to select correct pump head model and tubing size. Reference flow rate area display the maximum and minimum flow rate of current pump head and tubing.

4.4 Mode Setting Interface:

Mode Setting Interface as below:

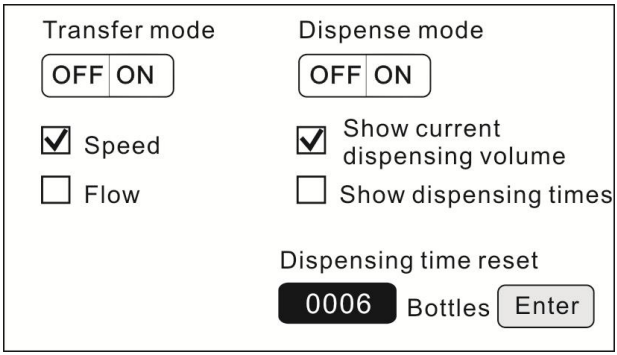

In main interface click ' System setting' button, click' Mode setting' button, enter mode setting interface. Users can choose transferring mode or dispensing mode freely. According with user's request, in transferring mode, can choose display motor

speed or flow rate; in dispensing mode, can choose display filling volume or copy numbers. The display mode decide the content display in A area of main interface, can display current dispense volume or total numbers. Maximum dispense numbers is 9999, manual reset.

4.5 Back Suction Angle Setting Interface:

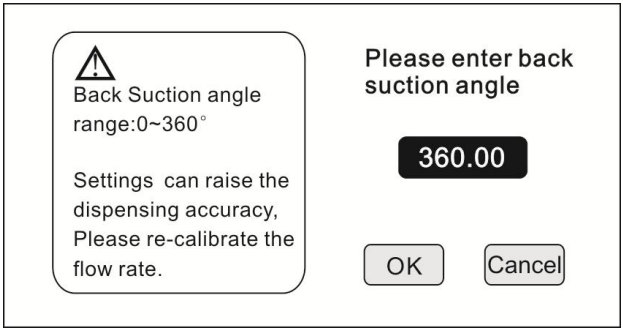

Click the **System Setting** button on the main interface, click **Suck-back** Angle button, enter suck-back angle setting interface. Click **Set Suck-back Angle** button, the numerical keyboard will come out, input the suck-back angle and click '**Confirm**' button, all the filling unit will work with this angle. Click '**Cancel**' button back to the system setting interface.

4.6 Common Mode Interface:

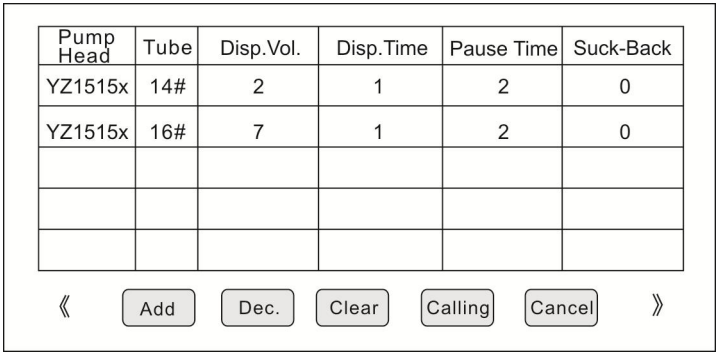

Click ' **System Setting**' button in main interface, click' **Common Mode**' button, enter common mode interface.

Add button: Cilck this button to increase one common mode. In dispensing mode, click '**Add**' button, it come out a window ask whether add the current setting into common mode. Click ' **Yes**' , then add this mode into common mode. Maxim can save 60 common modes.

Delete button: Choose one common mode, click ' **Delete**' button, then can delete this mode.

Clear button: Click this button, come out a window ask whether clear all data, click '**Yes**' , clear all modes.

Calling button: Select one common mode, click '**Calling**' button, then back to main interface . The dispensing parameters is the one mode just have selected.

Cancel button: Click this button back to main interface.

Page Up/Down Button: Can check previous page or next page common mode.

4.7 Communication Setting Interface:

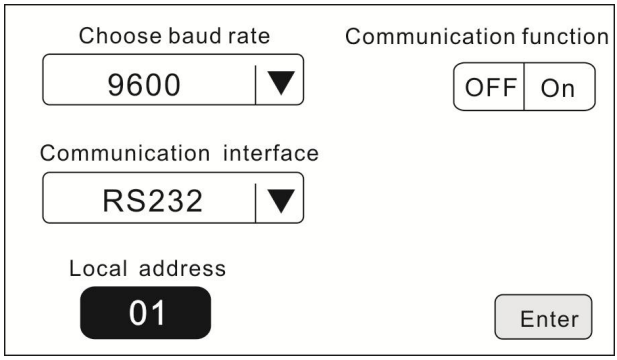

Click '**System Setting**' button in main interface,click '**Communication setting**' button,enter communication setting interface.Users can select baud rate and communication interface RS232/RS485. Local address can be any number between 1 and 32.

4.8 Flow Rate Calibration Interface:

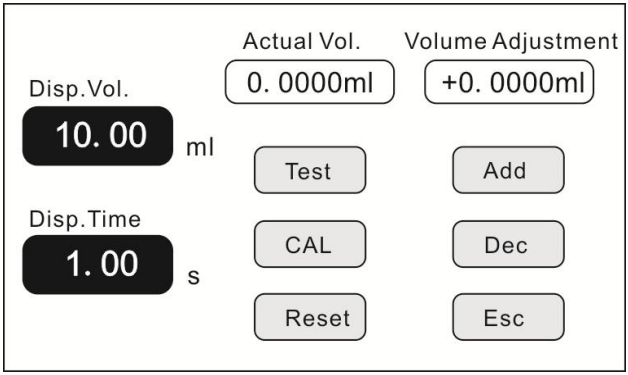

Click ' **Calibration**' button in main interface, enter flow rate calibration interface. In Volume dispensing mode, calibration interface data: dispensing volume and dispensing time (In speed dispensing mode, here shows the Disp.speed, and Disp.time)is the data set in main interface before.**In transferring mode**, dispensing volume is current flow rate refer to dispensing time. Click ' **Dispensing time**' to change the calibration volume.

Calibration process as below:

A) Confirm dispensing volume and time.

B) Click **Start** button to start the test, display countdown dispensing time, it will stop automatically, and the numerical keyboard come out, you can input the actual dispensing volume. After input the actual dispensing volume, it will ask whether continue test (suggest 3 times), choose '**YES**', it will test again; choose '**NO**', back to the calibration interface.

C) After several tests, actual dispensing volume display area display the average volume, click '**Calibration**' button, display calibrate successful.

D) If request higher accuracy, you can use the adjust function, click '**Add**' or '**Dec**' button, micro adjust the dispensing volume, meet high accuracy dispensing.

Online Micro Adjust Dispensing Volume Process：

If the dispensing volume is not correct during working, this function can micro adjust the volume online without affect the production line.

A) Click the Calibration button on the main interface,enter flow calibration interface.

B) Now only the 'Add','Dec' and 'Esc' button can be used, other button is forbidden.

C) Click Add or Dec button to adjust the dispensing volume.

Click 'Reset' button, the data back to factory default data.

Note: Dispensing mode, In the Speed Dispensing mode, only can make the online micro adjustment , click add button, the speed add 1 rpm, click Dec button,the speed reduce 1rpm.

4.9 Real-time Monitor Interface:

In dispensing mode, the monitor interface as below:

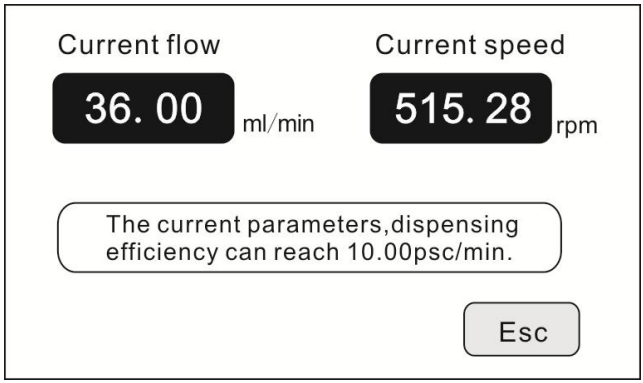

Click **Monitor** button in main interface to enter the monitor interface,check the current flow rate, motor speed and dispensing efficiency. (In speed dispensing mode, it is forbidden)

In transferring mode, the monitor interface as below:

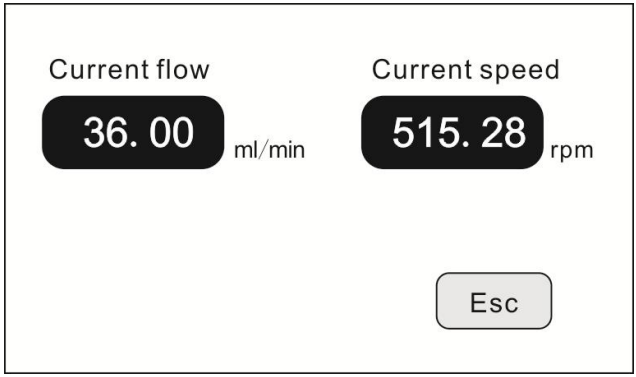

Click Monitor button in main interface, enter the monitor interface, check the current flow rate and motor speed.

4.10 Volume Dispensing interface

In Volume Dispensing mode, the monitor interface as below:

Click the Volume dispensing button on the main interface to enter the dispensing volume setting interface.

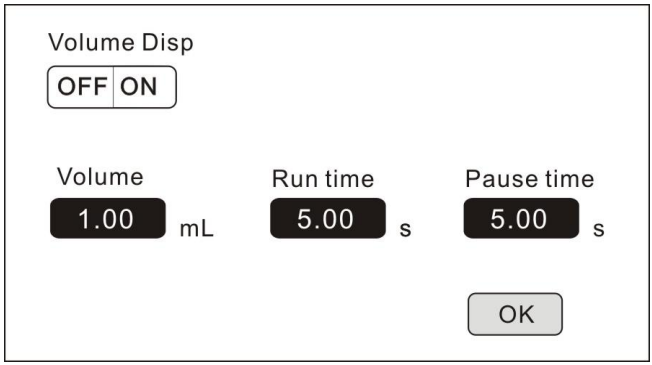

First, turn on the volume Dispensing function, then enter other parameters. After the parameter is entered, click the OK button to return to the main interface.

4.11 Speed Dispensing interface

In Speed Dispensing mode, the monitor interface as below:

Click the Speed dispensing button on the main interface to enter the dispensing Speed setting interface.

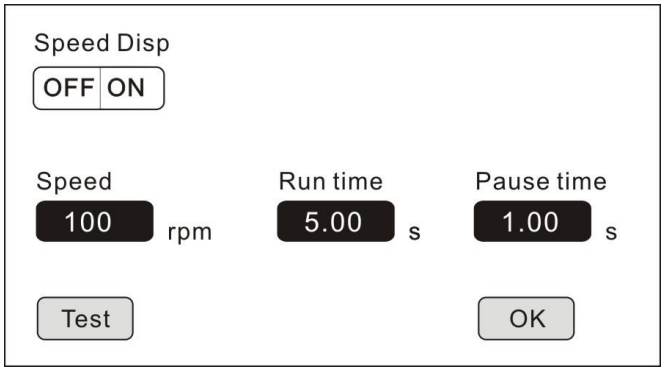

First, turn on the Speed Dispensing function, then enter other parameters. After the speed and run time parameter is entered, click the Test button ,the machine will run once time according to the setting motor speed and run time,,click OK button to return to the main interface.

Note: Volume Dispensing mode and Speed Dispensing mode, only one can be effective. When one working mode is enabled, the other will automatically become invalid.

4.12 Date and Time Setting Interface:



Click **Date and Time** display in the main interface, enter the date and time setting interface.

Click **Set Date** button, the numerical keyboard come out, input the **Year,** setting year range is 1970-2099. After input the year, click confirm to set the month and day. Click **Set Time** button, the numerical keyboard come out, input the hour, minute and second.

5. External Control Interface Instruction

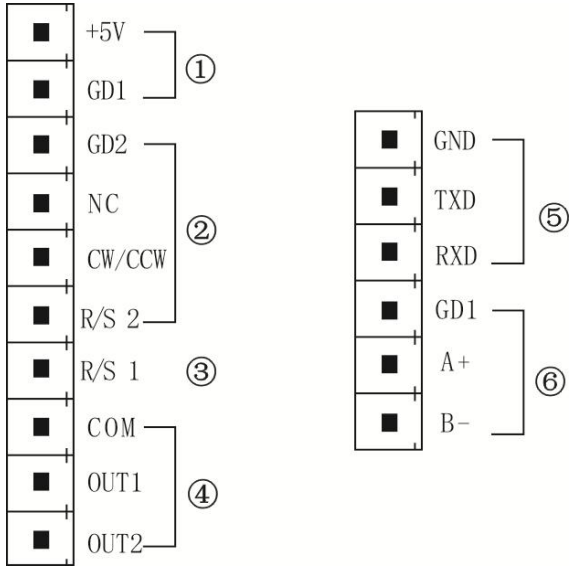

① Internal isolation 5VDC output

② External control start/stop, cw/ccw signal input terminal: Active signal input. (default 5VDC)

If need change to 12VDC or 24VDC input, please open the controller housing, and change the jumper connection on the external control board as below : Signal recognition is valid for rising edge, high level minimum duration is 200ms

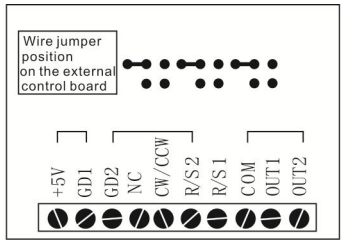

12V Level input

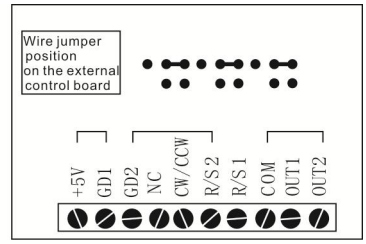

24V Level input

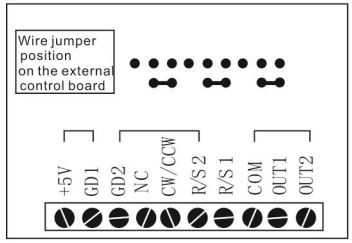

5V Level input

GD2: External control signal common input terminal.

NC: External control full speed signal input(Signal rising edge valid)

CW/CCW:External control direction signal input(Signal rising edge valid)

R/S2: External control start signal input (Signal rising edge valid)

③ R/S1: External control start/stop signal input terminal**: Passive signal input.**

This terminal can connect with passive switch or foot pedal switch.

External control cable:

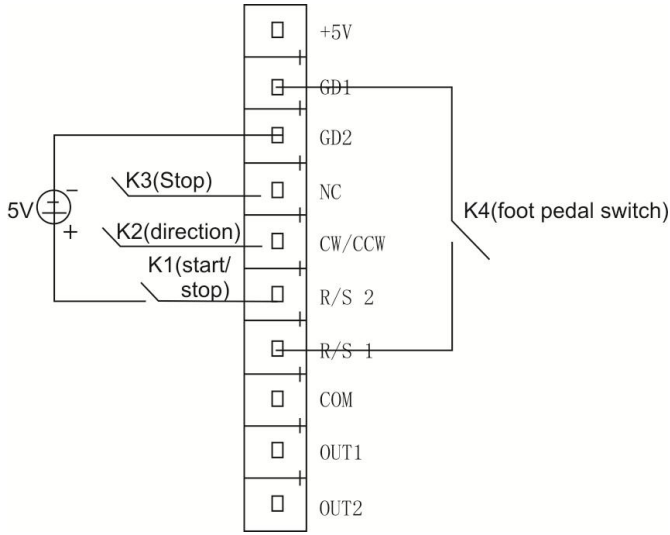

a. Disconnect K1 after short connect, the motor start working, disconnect again after short connect , pump pause working.

b. After the K3 is shorted, the motor runs at full speed, and after the disconnection, the motor stops running.

c. Each time disconnect K2 after short connect, the motor change working direction.

d. Disconnect K4 after short connect, the motor start working. Disconnect again after short connect, the motor stop working.

④ Motor running status output: ;

Output motor running status, wiring as shown below

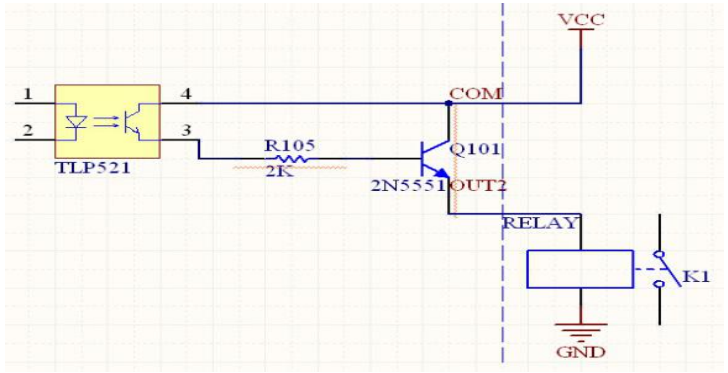

If connect with relays, when the motor running, K1 connect; when the motor stop running, the K1 disconnect.

⑤ RS232 Communication: Choose RS232 in the Communication setting interface, this terminal is active.

GND: Communication ground terminal.

TXD: Master sending, peristaltic pump receive signal terminal.

RXD: Peristaltic pump sending, master receive signal terminal.

RS232 Communication Interface Connection Diagram as below:

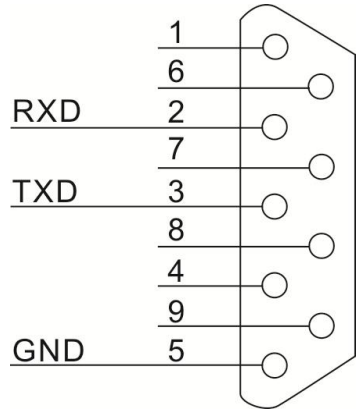

⑥ RS485 Communication Interface: Choose RS485 in the communication setting interface, this terminal is active.

GD1: RS485 signal interface

A+: Connect RS485 A+ terminal

B-: Connect RS485 B- terminal

Note:

Both RS232 or RS485, the communication protocol is standard MODBUS protocol.

Only the pump in main interface, RS232 or RS485 is workable.

6. Lab F Series Technical Specification

Dispensing Volume Range	0.1-9999.99 ml	Power Supply	AC 220V±10% 50Hz/60Hz(stanard) AC 110V±10% 50Hz/60Hz(optional)
Dispensing Time Range	0.5-9999.99 s	External Control	Switch signal
Pause Time Range	0.5-9999.99 s	Communication interface	RS232/RS485
Dispensing Volume Resolution	0.01ml	Temperature	0-40℃
Time Resolution	0.01s	Relative Humidity	<80%
Dispensing Numbers Range	1-9999,0 is unlimited	Output interface	Output motor working status (Open-Collector output)
Suck-back Angle	0-360°	IP Rate	IP31
Power Consumption	<50W	Motor Type	Stepper motor
Flow Rate Range	LabF1	0.00067~570ml/min	
	LabF3	0.00067~1330ml/min	
	LabF6	0.00067~2280ml/min	

7.Lab F Series Main Function and Features

- Accurate angle control technology, high precision filling.
- Color touch-screen control, friendly interface, dynamic display filling state, also display the filling parameter and system settings.
- Intelligent calibration function, it will calibrate the filling volume before production to ensure the filling accuracy.
- Online micro adjusting function, to make you convenient to micro adjust the filling unit during the production progress. It can avoid the filling errors because of tubing fatigue and elasticity decreased.
- The pump can store 60 commonly used filing modes, save users setting time, and improve working efficiency.
- Back suction angle setting, avoid liquid drop off when the pump stop working.
- External control start and stop function, make it can be unified controlled by the host computer when working in filling line.
- RS232/RS485 communication interface, support Modbus protocol (RTU mode), for remote control.
- Fast filling liquid function, not only can wash the tubing, but also can fill liquid in the tubing.
- ABS engineering plastic housing, resist corrosion, no rust, conform to GMP sanitary request.

8. Product Dimension (mm)

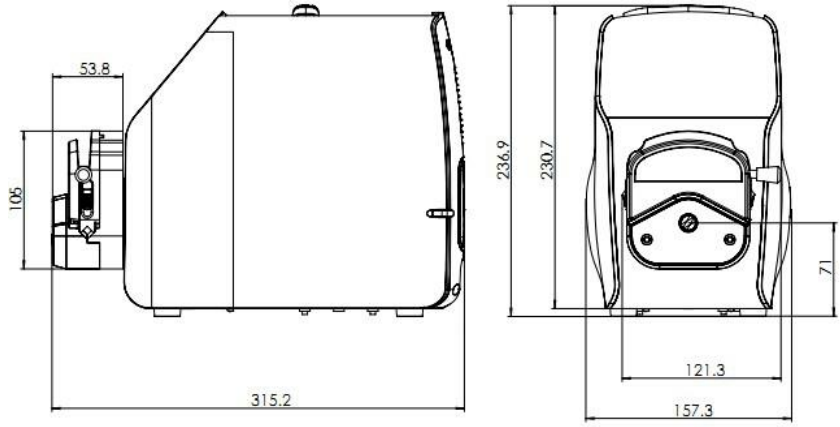

9. Maintenance

- When the pump is not working, loosen the tubing, avoid the tubing get plastic deformation because of long time pressure.
- The pump drive and pump head do not resist strong corrosive liquids, please pay attention to this when use the pump.
- Keep the pump head rollers clean and dry. If the rollers is not clean, it will increase the tubing wearing, shorten the tubing life and make the rollers damage very soon.
- If there is liquid drop on the rollers, clean it as soon as possible.

10. Warranty and After Sales Service

We support three years warranty (do not include tubing). During the warranty, the pump is damaged by wrong operation or man-made sabotage, our company do not responsible for warranty. If the product out of warranty, we only charge cost for the replacement parts and shipping cost.

MADE IN CHINA

Baoding Shenchen Precision Pump Co., Ltd.

Address: No.103, Building 2, ZhiDian Industrial Park, FuXing East Road 999, Baoding, China.

Tel: 0086-312-5958380

Fax: 0086-312- 6780636

Website: www.good-pump.com

Email: info@good-pump.com

2020.01