Dispensing Peristaltic Pump

LabF1, LabF3, LabF6

3 years warranty



ABS Engineering Plastic Housing



- Medicine and chemical dispensing, such as oral liquid, diagnostic reagents.
- Cosmetic dispensing, such as perfume, lip gloss.

Accessories



① Filling Countersunk

② Filling Nozzle

③ Foot Pedal Switch

Features

- Imported 4.3'' industrial grade color LCD screen display, with touch screen control.
- Can preset dispensing volume, dispensing time, pause time and copy numbers.
- With intelligent calibration function and online micro adjusting function.
- The pump can store 60 commonly used filling modes.
- Back suction angle setting, avoid liquid drop off when the pump stops working.
- New flow rate mode, can be used for continuous transferring.
- Can communicate with balance, closed-loop control.

Dispensing Peristaltic Pump

F1, F3, F6

3 years warranty



304 SS Housing

Model Number

- F1, F3, F6

External Control Schematic Diagram

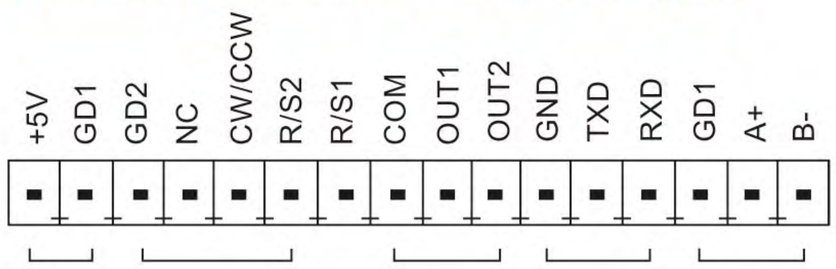

Technical Specifications

Flow rate range	LabF1/F1: 0.00166~570mL/min LabF3/F3: 0.00166~1330mL/min LabF6/F6: 0.00166~2280mL/min	Start/stop, direction signal	Passive switch signal, such as foot pedal switch; Active switch signal: 5V, 12V and 24V for option
Speed range	1-600rpm	Output interface	Output motor working status (Open-Collector output)
Speed resolution	0.01rpm	Communication interface	RS232, RS485 support Modbus protocol (RTU mode)
Dispensing volume range	0.1-9999.99mL	Power supply	AC 220V±10% 50Hz/60Hz (Standard) AC 110V±10% 50Hz/60Hz (Optional)
Dispensing volume resolution	0.01mL		
Dispensing time	0.1-9999. 99s	Outlet pressure	0.1Mpa(0.8~1.0mm wall thickness tubing) 0.1~0.27Mpa(1.6~2.4mm wall thickness tubing)
Pause time	0.1-9999. 99s		
Time resolution	0.01s	Drive dimension (L×W×H)	LabF Series: 261.4×157.3×236.9 mm
Copy numbers	1-9999 times, setting'0'means unlimited		F Series: 212×152×243mm
Back suction angle	0-360°	Drive weight	LabF Series: 4.40 kg
Dispensing accuracy	<±0.5%		F Series: 4.20 kg
Motor type	Stepper motor	Power consumption	<50W
Display	Industrial grade 4.3" color LCD display	Condition temperature	0-40℃
Control method	Touch screen and Mechanical keypad	Relative humidity	<80%
Keypad lifetime	**300,000 times**	IP rate	IP31

Product Composition and Flow Rate Range

Dispensing Peristaltic Pump		Pump Head & Flow Rates (mL/min)			
		YZ1515x	YZ2515x	MC1~MC12(10)	MC1~MC12(6)
Drive & speed / Tubing		13#, 14#, 19#, 16# 25#, 17#, 18#	15#, 24#	Inner diameter: 0.13-3.17mm Wall thickness: 0.8-1mm	
LabF1/F1	1-150rpm	0.07~570	1.7~435	0.00166-49(suggestion working speed≤150rpm)	0.00185-65(suggestion working speed≤150rpm)
LabF3/F3	1-350rpm	0.07~1330	1.7~1015		
LabF6/F6	1-600rpm	0.07~2280	1.7~1740		

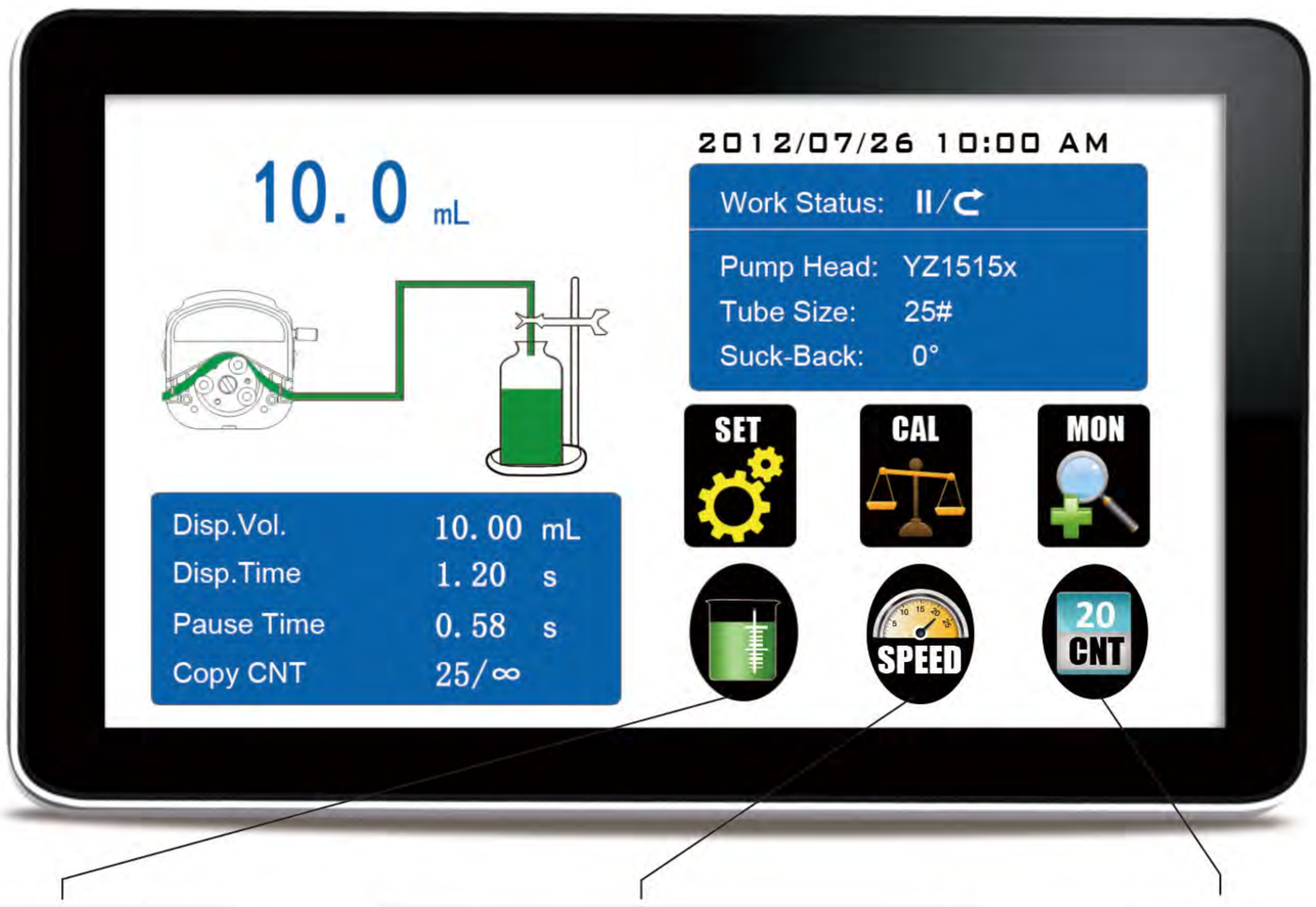

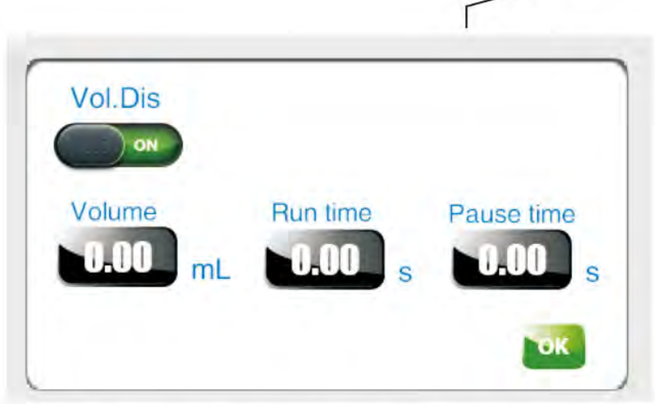

Volume dispensing interface

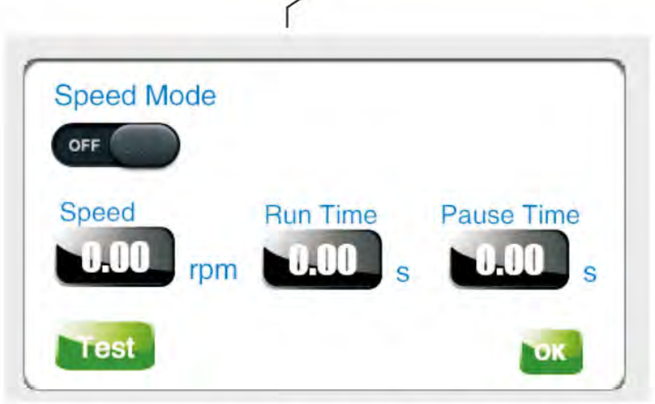

Speed dispensing interface

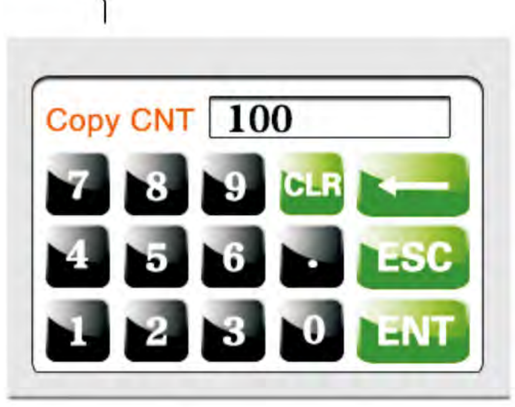

Repeat numbers interface

Easy Load Pump Head

YZ1515x,YZ2515x





Product Introduction

Change the tubing easily and rapidly; automatic tubing retention; accept 9 sizes tubing to meet different flow rates requests. Two kinds of material housing for customers' selection. PSF (polysulphone material): white, exquisite appearance, good rigidity, high precision, usually used in research laboratory and supporting analytical device. PPS (polyphenylene sulfide material): black, resist organic solvent corrosion, high precision and rigidity, suitable for industry or other bad working conditions. Rollers assembly with 304 stainless steel material resists corrosion with long lifetime.

Dimension Drawing(Unit: mm)

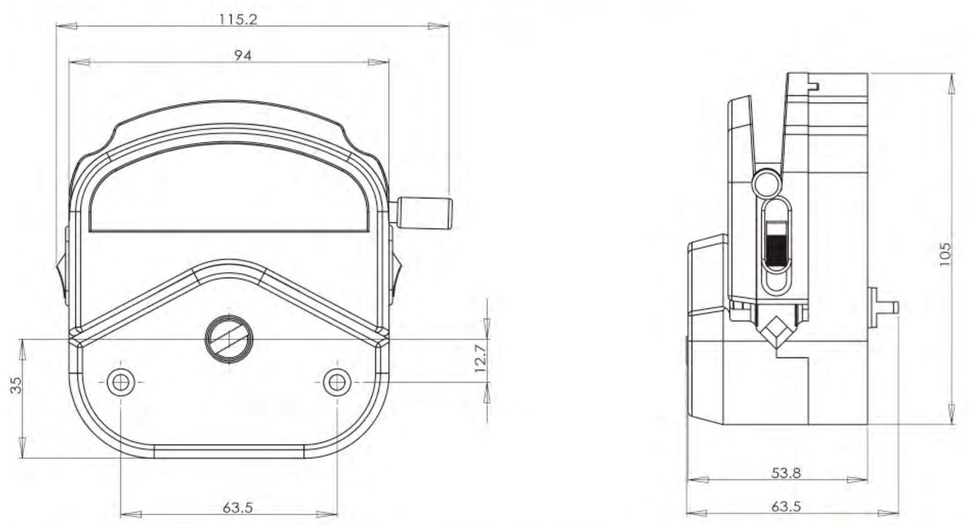

Mounting several pump heads can increase the flow rates.



YZ Series pump head has wide application, and is usually used together with many kinds of analytical instruments. According to the different technical requests, it can adopt different motors to drive, such as stepper motor, DC motor, synchronous motor, AC gear motor, etc. Stack up several pump heads can increase the flow rates.

Model Number | YZ1515x,YZ2515x

Typical Application

- Support COD on-line monitor.
- Support anorectal therapeutic instrument.
- Support biofermentation cylinder.



3 rollers 6 rollers

Pump Head	Tubing	ID×Wall thickness(mm)	mL / r	Flow Rate(mL/min) (0.1–600rpm)	Tubing Max.Pressure(Mpa)		Material/Weight(kg)	
					Intermittent	Continuous	PSF	PPS
YZ1515x	13#	0.8×1.6	0.07	0.007~42	0.27	0.17	0.40 (3 rollers)	0.46 (3 rollers)
	14#	1.6×1.6	0.27	0.027~162				
	19#	2.4×1.6	0.55	0.055~330				
	16#	3.1×1.6	0.82	0.082~492				
	25#	4.8×1.6	1.7	0.17~1020	0.24	0.14	0.44 (6 rollers)	0.50 (6 rollers)
	17#	6.4×1.6	2.9	0.29~1740	0.14	0.10		
	18#	7.9×1.6	3.8	0.38~2280	0.10	0.07		
YZ2515x	15#	4.8×2.4	1.7	0.17~1020	0.27	0.17	0.40 (3 rollers)	0.46 (3 rollers)
	24#	6.4×2.4	2.9	0.29~1740				

Multichannel Pump Head-MC Series

POM Material &PVDF Material



Product Introduction

MC series new generation multichannel pump head with unique cam structure, make it much easier to operate. It is designed for small flow rates and multichannel transfer. Comparing with traditional DG pump head, it has particular cam design for micro adjustment occlusion, and also for opening the cartridge from the top. 304 stainless steel rollers assembly include two structures of 6 rollers and 10 rollers. Install silicone tubing and TYGON series imported tubing. It is widely used in supporting analytical instruments.

Typical Application

- Support blood sugar analytical device.
- Support ammonian analytical instrument.

Dimension Drawing(Unit: mm)

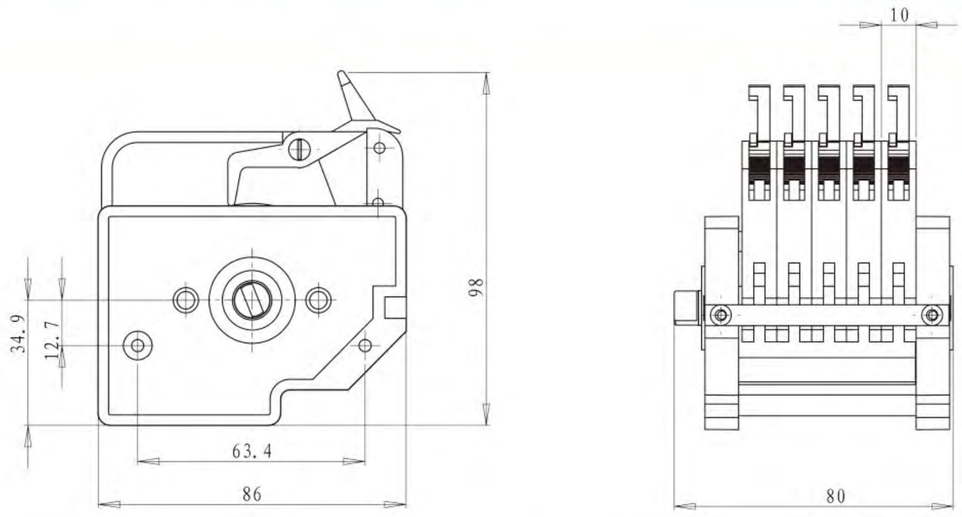

Note: Increasing or reducing one channel,the pump head size need to increase or reduce the thickness of one cartridge.



Dimension Drawing(Unit: mm)

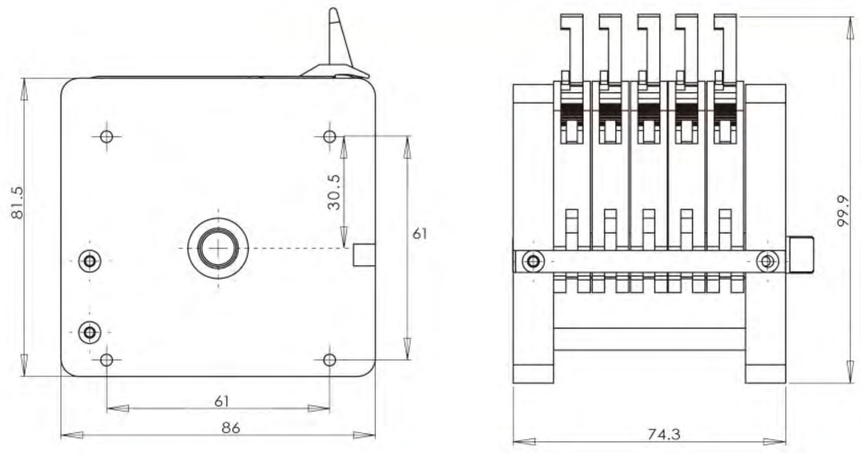

Note: Increasing or reducing one channel, the pump head size need to increase or reduce the thickness of one cartridge.

MC Pump Head VS DG Pump Head



1. The traditional DG series pump head need to open the cartridge from the bottom. It is very inconvenient to use when the space of the equipment is compact. The MC series pump head just need to open the cartridge from the top, easy to operate.



2. The gear on the MC pump head is smaller than DG, this improved the adjusting resolution.



DG Series

Multichannel Pump Head-MC Series

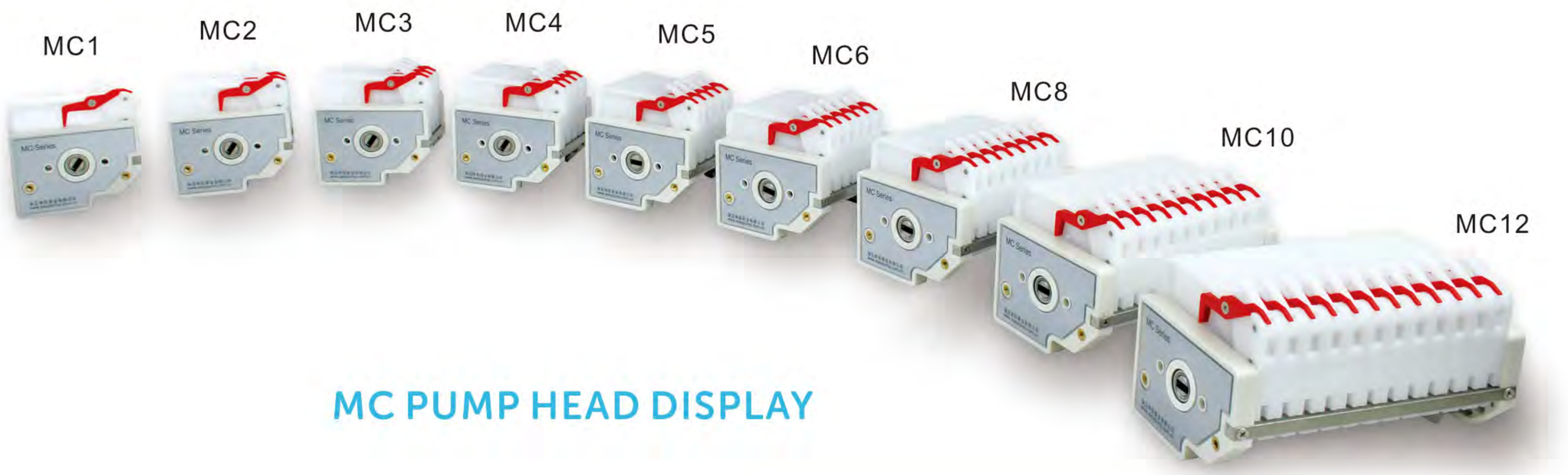

MC PUMP HEAD DISPLAY

Tubing Installation Procedure

Roller assembly
(10 roller)

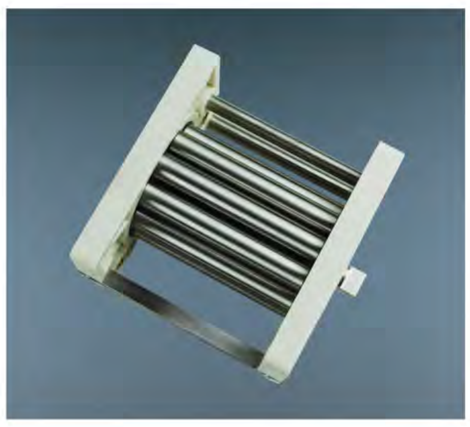

A. Turn the spanner clockwise to take it off from the lever.



B. After that, the cartridge can be taken out lightly.



C. Install the tubing and confirm the working position between two adjacent clamps.



D. Embed the cartridge and press it lightly to reach the working position.



E. Turn the spanner counter-clockwise to make it reach the lever.



F. Multichannel pump heads and tubing drawing.



MC Technical Specifications

Channel number	1	2	3	4	5	6	8	10	12
Cartridge material	POM/PVDF								
Rollers material	304/316 stainless steel material								
Rollers number	6 rollers, 10 rollers								

Tubing	Speed	Flow rate of pump head with 10 rollers (mL/min)	Flow rate of pump head with 6 rollers (mL/min)	Tubing maximum pressure (Mpa)	
				Continuous	Intermittent
1×1	0.1~150rpm	0.0046~6.90	0.0053~7.95	0.1	0.1
2×1		0.0156~23.40	0.021~31.35		
2.4×0.8		0.0212~31.80	0.0274~41.10		
3×1		0.0324~48.60	0.043~64.95		
0.13×0.86		0.00016~0.24	0.000185~0.277		
0.19×0.86		0.0002~0.27	0.0003~0.420		
0.25×0.86		0.0003~0.480	0.0005~0.720		
0.51×0.86		0.0014~2.10	0.0020~3.0		
0.89×0.86		0.0039~5.85	0.0057~8.55		
1.14×0.86		0.0066~9.90	0.0090~13.5		
1.52×0.86		0.0093~13.95	0.0133~19.95		
2.06×0.86		0.015~22.50	0.0250~37.5		
2.79×0.86		0.024~35.85	0.037~55.50		

Peristaltic Pump Accessories

A Filling nozzle

304/316SS



PTFE





When transferring or dispensing liquid reduce splashing and dropping off maximumly, most out of the splash reduction.

Dimensional tolerance ±0.05%,assure reproducibility.

Name	Material	Tube
Filling nozzle	304/316 SS/PTFE	13#/14#, 19#, 16#, 25#/15#, 17#/24#/26#, 18#/35#,36#/73#, 82#

B One way checkvalve

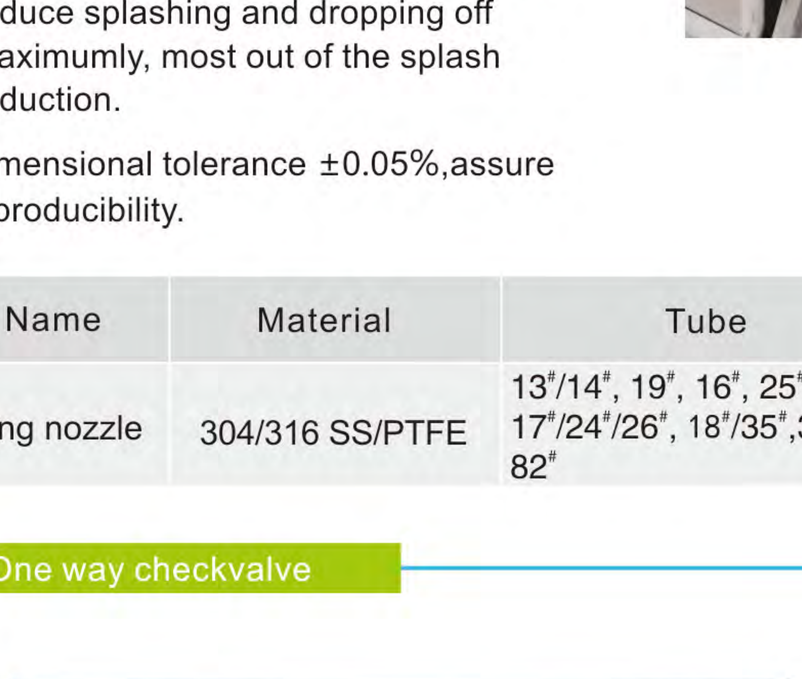

Avoid liquid drop off after filling and transferring.

C Filling Countersunk



Used for the output of tube, preventing the tube floating or absorbing the wall of container.

Name	Material	Tube
Counter sunk	304/316 stainless steel	13#, 14#, 19#, 16#, 25#, 17#,18#, 15#, 24#, 35#, 36#, 26#, 73#, 82#

D Handling Dispenser



Filling nozzle and tubing cap			
Filling nozzle size	13#	14#	19#
Inner diameter	3mm	3.5mm	4.5mm
Picture			
Filling nozzle size	16#	15#/25#	17#/24#
Inner diameter	5mm	7mm	9mm
Picture			
Tubing size	17#	18#	Plum blossom cap
Inner diameter	9.6mm	11.1mm	
Picture			

Based on ergonomics design, elegant appearance, grip feeling comfortable, easy operation. Connect to peristaltic pump external control interface, with start/stop and full speed control, can realize transferring and dispensing function. Power supply and working indicator, show the dispenser working status. With hanging hole, can be hang up when do not use.

E Foot pedal switch



water proof



Control the pump start/stop with foot pedal switch.

F Tube connector



a Straight tube connector



b “Y” tube connector



c Tee tube connector



d Reducer tube connector



e “L” tube connector

Tube				
13#	14#	19#	16#	25#
17#	18#	15#	24#	35#
36#	26#	73#	82#	

G PH Controller



Work with peristaltic pump, can control the liquid PH value, add acid or alkali automatically.
Function:
1. Liquid: Acid–Base Solutions
2. PH value : 0–14PH
3. Set up target PH value
4. Add acid or alkali liquid automaticall
5. Control: RS485 , 4–20mA
6. Power supply: DC24V (AC220V for option)
7. Suitable temperature: 0–60℃

H Wireless remote



When applied in the dispensing line, it can detect weather there is filling bottle in the production line. When the bottle approach the sensor side, the switch action will be made without any mechanical contact or pressure, thereby providing filling control order to the pump. In the same way, when no filling bottle is detected, the stop filling control order is provided to the pump.

I Benchtop tubing cutter



Stainless steel blade, makes right-angle cuts in several sizes of plastic tubing.

J Support stand







The multiple filling stand is suitable for more than 2 channels filling. It can hold 2–8 filling nozzles. We can customize the suiatble one according to your request.