

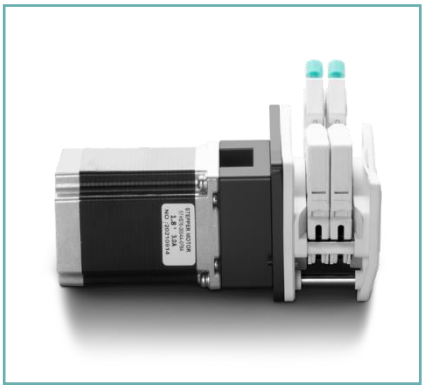

1. Flow Characteristics

AMC Series pump head Technical Specifications									
Channel number	1	2	3	4	5	6	8	10	12
Cartridge material	POM/PVDF								
Roller material	304/316 stainless steel material								
Rollers number	10 rollers, 6 rollers								

Tubing	Speed	Flow rate of pump headwith 10 rollers(mL/min)	Flow rate of pump headwith 6 rollers(mL/min)	Tubing Max. Pressure (MPa))	
				Intermittent	Continuous
1×1	0.1~150 RPM	0.0050~7.55	0.0062~9.36	0.1	0.1
2×1		0.0183~27.52	0.0220~33.06		
2.4×0.8		0.0254~38.13	0.0319~47.81		
3×1		0.0323~48.38	0.0434~65.17		
0.13×0.86		0.0002~0.29	0.0002~0.31		
0.19×0.86		0.0003~0.44	0.0003~0.46		
0.25×0.86		0.0005~0.76	0.0005~0.80		
0.51×0.86		0.0013~2.00	0.0014~2.05		
0.89×0.86		0.0030~4.47	0.0031~4.65		
1.14×0.86		0.0061~9.16	0.0065~9.74		
1.42×0.86		0.0125~18.75	0.0142~21.28		
2.06×0.86		0.0197~29.60	0.0234~35.17		
2.79×0.86		0.0286~42.86	0.0372~55.77		

2. Pump Motor Specification

Speed range	0.1-150rpm
Flow rate range	0.0002-65mL/min
Motor type	Stepper motor
Motor phase number	2
Motor step angle	1.8°
Motor phase voltage	1.95V
Motor phase current	3.0A
Working environment	0-40℃, 80%RH

3. Dimension Drawing (Unit: mm)

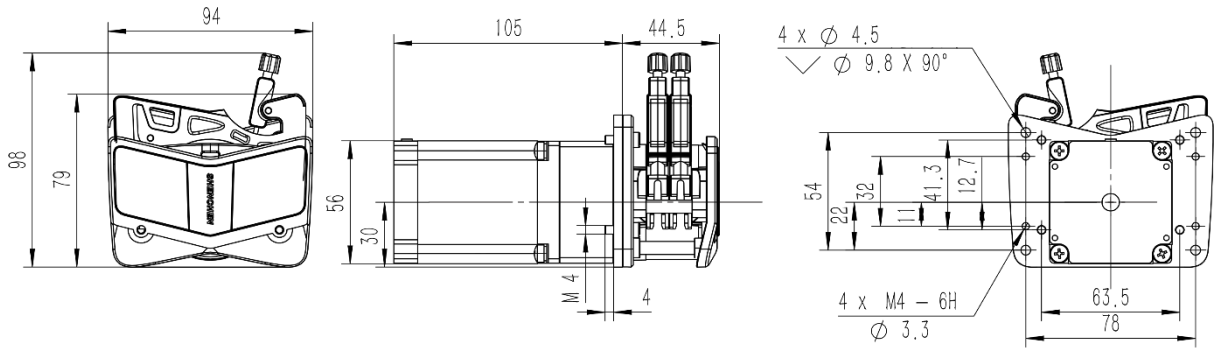

4. Tubing Installation Procedure



Step 1 Step 2 Step 3 Step 4 Step 5