Blue-White®

Operating Manual

CHEM-FEED®

Multi-Diaphragm Metering Pump



Series CD1

1.0	**Introduction**	**4**
	1.1 Available Models	4
2.0	**Engineering Specifications**	**4**
3.0	**Construction Materials**	**5**
	3.1 Wetted Components	5
	3.2 Non-Wetted Components	5
4.0	**What's In The Box**	**6**
	4.1 Agency Listings	6
5.0	**Installation**	**7**
	5.1 Mounting Location	7
	5.2 Wall Mounting	8
	5.3 Programming 4-20mA Input (V option only)	9
	5.4 Programming FVS (Flow Verification Sensor)	10
6.0	**Power Connections**	**10**
7.0	**Touchpad Layout**	**11**
	7.1 IO Connection	12
8.0	**Output Adjustment**	**14**
9.0	**Diaphragm Failure Detection (DFD)**	**14**
10.0	**Pump Maintenance**	**15**
	10.1 Routine Inspection and Maintenance	15
	10.2 Cleaning Pump	15
	10.3 Replacing the Pump Diaphragm	15
11.0	**Accessories**	**16**
12.0	**Replacement Parts List**	**18**
	12.1 Exploded View	19
13.0	**Troubleshooting**	**20**
14.0	**Warranty**	**21**
APPENDIX A	**Acronyms**	**22**
APPENDIX B	**Model Number Matrix**	**23**

READ THE INSTRUCTION MANUAL PRIOR TO INSTALLATION AND USE.


+1 (714) 893 - 8529


sales@blue-white.com


customerservice@blue-white.com


5300 Business Drive
Huntington Beach, CA 92649

1.0 INTRODUCTION

Congratulations on purchasing the CD1 variable speed Multi-Diaphragm Metering Pump.

Please Note: Your new pump has been pressure tested at the factory with clean water before shipping. This is part of our stringent quality assurance program at Blue-White Industries.

1.1 Available Models

Chem-Feed® CD1 Multi-Diaphragm Metering Pump

Feed Rate		Maximum Pressure PSI (bar)	Maximum Temperature °F (°C)	All CD1 Model Numbers
GPH	LPH			
.004 - 7.70	.015 - 29.2	150 (10.3)	185 (85)	CD1F & CD1V

2.0 ENGINEERING SPECIFICATIONS

Maximum Working Pressure (Excluding pump tubes)[1]	150 PSI (10.3 bar)
Maximum Fluid Temperature	185°F (85°C)
Maximum Viscosity	1000 centipoise
Maximum Suction Lift	20 ft. at 0 PSI
Ambient Operating Temperature	14°F to 115°F (-10°C to 42°C)
Ambient Storage Temperature	-40°F to 158°F (-40°C to 70°C)
Operating Voltage	115V60Hz 1 PH (0.6A max.) 220V50Hz 1 PH (0.3A max.) 230V60Hz 1 PH (0.3A max.) 230V50Hz 1 PH (0.3A max.) 240V50Hz 1 PH (0.3A max.)
Power Cord Options	115V50/60Hz = NEMA 5/15 (USA) 230V50/60Hz = NEMA 6/15 (USA) 220V50/60Hz = CEE 7/VII (EU) 240V50/60Hz = AS 3112 (Australia/New Zealand) 230V50/60Hz = BS 1363/A (UK)
Motor	Brushless DC, 50W
Duty Cycle	Continuous
Motor Speed Adjustment Range	2,000:1 (0.05% - 100%)
Enclosure	NEMA 4X (IP66), Valox® (PBT) & PA12
Maximum Overall Dimensions	7.25” W x 9” H x 10” D (18.5 W x 22.9 H x 25.2 D cm)
Product Weight	8.5 lb. (3.8t Kg)
Approximate Shipping Weight	15.5 lb. (5.9 Kg)
Approximate Shipping Dimensions	10.5” W x 13.75” H x 11” D (26.7 W x 35 H x 28 D cm)

3.0 CONSTRUCTION MATERIALS

3.1 Wetted Components

Pump Head Assembly	
Pump Head	PVDF
Adapter Connections	PVDF
Valve Cartridge	PVDF
Valve Balls	Ceramic
Elastometer	TFE/P (optional EP)
Static Seals	TFE/P (optional EP)
Diaphragm	DiaFlex® (optional Flex-A-Prene®)
Injection / Back-Flow Check Valve	
Body & Insert	PVDF
Check Ball	Ceramic
Spring	Hastelloy C-276
Static & Ball Seat O-Ring	TFE/P (optional EP)
Ancillary Items Provided	
Suction Tubing	3/8” OD x 1/4” ID x 5’ Clear PVC
Discharge Tubing	3/8” OD x 1/4” ID x 5’ Polyethylene (LDPE)
Suction Strainer	Polypropylene
Weight	Ceramic

3.2 Non-wetted Components

Enclosure	Valox® (PBT) & PA12
Drive Enclosure	PA12
Pump Head Cover	Polycarbonate
Cover Screws	Stainless steel, polypropylene cap
DFD System Sensor Pins	Hastelloy C-276
Power Cord	3 conductor, SJTW-A water-resistant
Mountaing Brackets and Hardware	3/16 stainless steel screws GF nylon bracket

4.0 What's In The Box

CD1 Multi-Diaphragm Pump



Instruction Manual



Wall Mounting Bracket



Suction Tubing (3/8"x5')



Discharge Tubing (3/8"x5')



Parts Kit

!Injection Fitting
!Foot Valve
!Screws
!Ceramic Weight
!Tube Nuts



4.1 Agency Listings

This pump complies to the Machinery Directive 2006/42/EC, BS, EN 60204-1, Low Voltage Directive 2014/35/EU BS EN 61010-1, EMC Directive 2014/30/EU, BS EN 50081-1/BS EN 50082-1.

This pump complies to the Machinery Directive 2006/42/EC, BS, EN 60204-1, Low Voltage Directive 2014/35/EU BS EN 61010-1, EMC Directive 2014/30/EU, BS EN 50081-1/BS EN 50082-1.

Symbol	Description
	Warning (Risk of electric shock)
	Caution (Refer to the user's guide)
	Ground, Protective Conductor Terminal

ENCLOSURE RATING

NEMA 4X Constructed for either indoor or outdoor use to provide a degree of protection to personnel against incidental contact with enclosed equipment; to provide a degree of protection against falling dirt, rain, sleet, snow, windblown dust, splashing water, and hose-directed water; and that will be undamaged by external formation of ice on enclosure.

IP66 No ingress of dust; complete protection against contact. Water projected in powerful jets against enclosure from any direction shall have no harmful effects.

5.0 INSTALLATION

CAUTION The pump should be serviced by qualified persons only. If equipment is used in a manner not specified in this manual, the protection provided by the equipment may be impaired.

CAUTION Risk of chemical overdose. Be certain pump does not overdose chemical during backwash and periods of no flow in circulation system.

CAUTION Always wear protective clothing, face shield, safety glasses and gloves when working on or near your metering pump. Additional precautions should be taken depending on solution being pumped. Refer to MSDS precautions from your solution supplier.

CAUTION All diagrams are strictly for guideline purposes only. Always consult an expert before installing metering pump on specialized systems. Metering pump should be serviced by qualified persons only.

CAUTION Be sure that installation does not constitute a cross connection with drinking water supply. Check your local plumbing codes.

CAUTION The pump should be supplied by an isolating transformer or RCD (operating current less or equal 30 mA).

5.1 Mounting Location

1. Choose an area located near the chemical supply tank, chemical injection point, and electrical supply. Also, choose an area where the pump can be easily serviced.

2. Finding a secure surface and using the provided mounting hardware, mount the pump close to the injection point. Keep the inlet (suction) and outlet (discharge) tubing as short as possible. Longer discharge tubing increases back pressure at pump head.

NOTE: Mounting the pump lower than the chemical container will gravity-feed chemical into it. This “flooded suction” installation will reduce output error due to increased suction lift. A shut-off valve, pinch-clamp, or other means to halt gravity-feed to the pump must be installed during servicing.

NOTE: Install a back flow prevention check valve at the discharge side of the pump to prevent the system fluid from flowing back through pump during tube replacement or during tube rupture.

NOTE: It is recommended to have a pressure relief valve at the discharge side of the of pump to prevent premature wear and damage to the pump tube, in the event that the discharge line becomes blocked.

NOTE: The pump does not require back pressure. Keep the discharge pressure as low as possible to maximize the tube life.

5.2 Wall Mounting

1. Using the provided #10 self-tapping screws, mount the bracket to a secure wall that is located where it can be easily serviced.

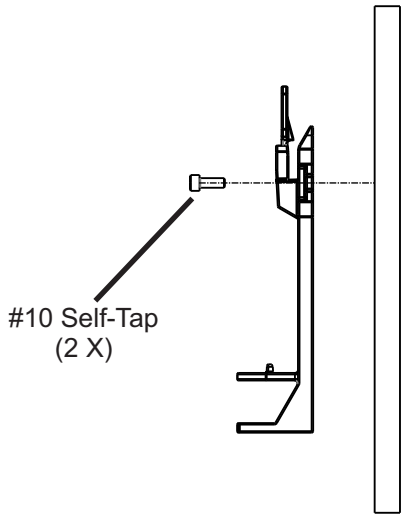

Wall Mount Bracket (Side View)

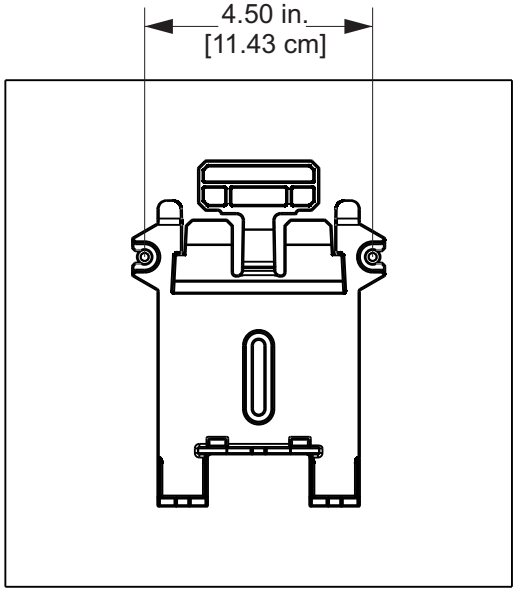

Mounted Pump (Front View)

2. Lower the pump so that the tab on the wall mount is inserted into the slot located on the back of the pump. The pump will now be secured to the wall mount bracket.

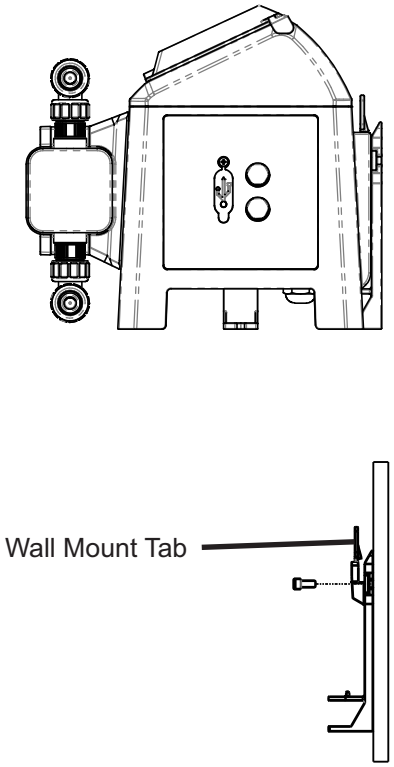

Wall Mount (Side View)

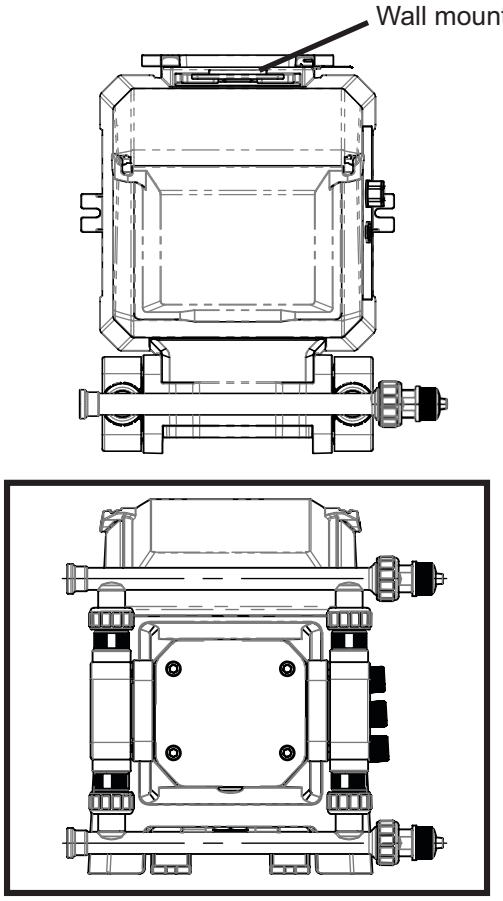

Mounted Pump

5.3 4-20mA Input

CAUTION

Proper eye and skin protection must be worn when installing and servicing the pump.

5.31 Selecting 4-20mA input mode

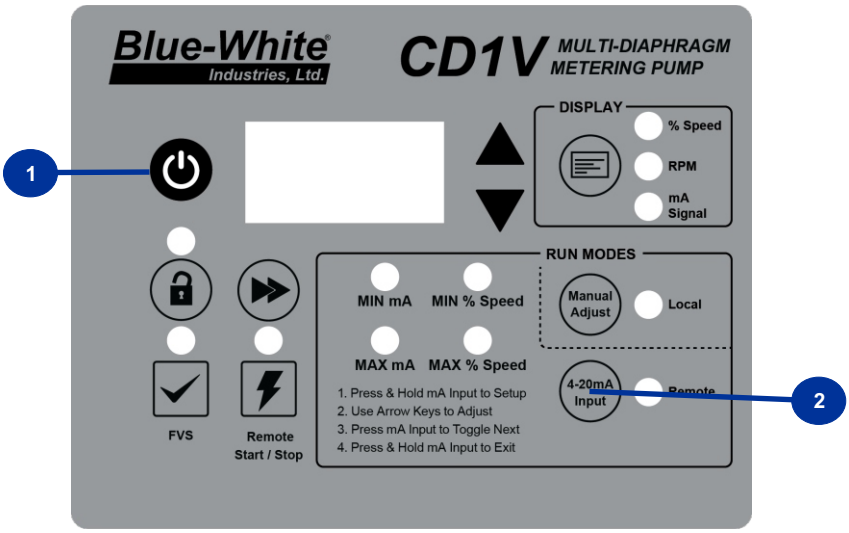

	Directions
1	Confirm that pump is in the OFF position
2	Press 4-20mA Input button

5.32 Programming 4-20mA input mode

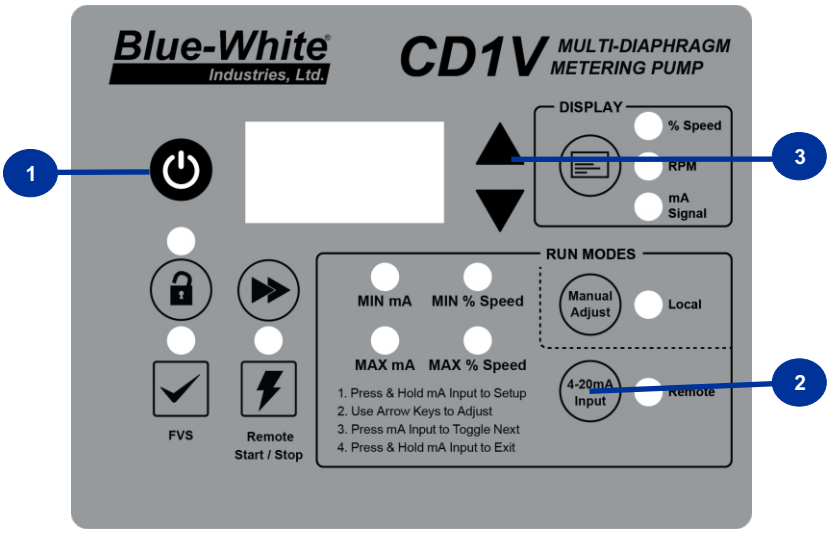

	Directions
1	Confirm that pump is in the OFF position.
2	Press and hold 4-20mA Input button.
3	MIN mA light will illuminate. Use arrow keys to toggle min mA value for the pump to operate at
4	Press 4-20mA Input button for MIN % Speed light to illuminate
5	Use arrow keys to toggle MIN % Speed value for the pump to operate.
6	Press 4-20mA Input button for MAX mA light to illuminate.
7	Use arrow keys to toggle MAX mA value for the pump to operate.
8	Press 4-20mA Input button for MAX % Speed light to illuminate.
9	Use arrow keys to toggle MAX % Speed value for the pump to operate.
10	Press and hold 4-20mA Input button to exit programming mode.

5.4 Programming FVS (Flow Verification Sensor)

CAUTION

Proper eye and skin protection must be worn when installing and servicing the pump.

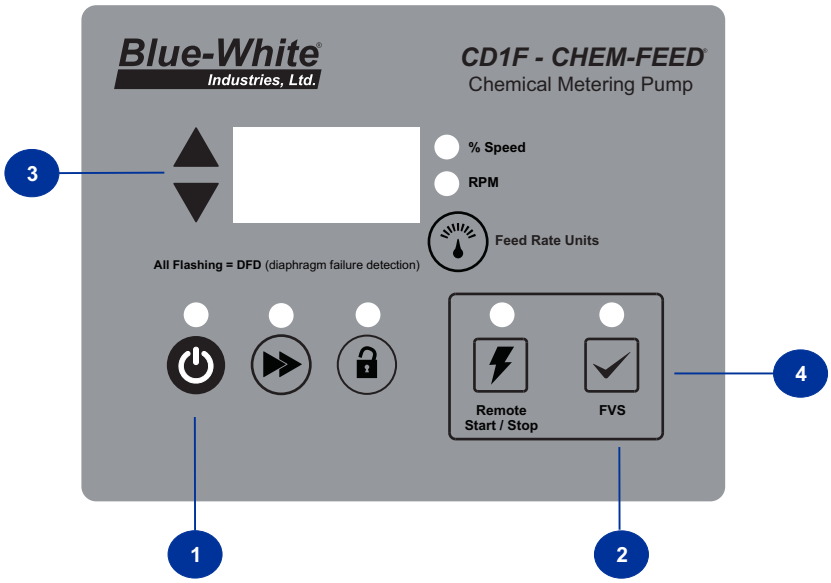

Directions	
1	Confirm that pump is in the OFF position
2	Press and hold FVS button
3	Toggle up/down arrow until desired trigger time is shown (seconds)
4	Press and hold FVS button to set

NOTE: Alarm Delay Time range is 1-20 seconds

6.0 POWER CONNECTIONS

WARNING

Risk of electric shock – cord connected models are supplied with a grounding conductor and grounding-type attachment plug. To reduce risk of electric shock, be certain that it is connected only to a properly grounded, grounding-type receptacle.

WARNING

Electrical connections and grounding (earthing) must conform to local wiring codes.

WARNING

Risk of electric shock - Disconnect electricity before removing wiring compartment cover.

WARNING

Ensure to connect the pump to the proper supply voltage. Using the incorrect voltage will damage the pump and may result in injury. The voltage requirements is printed on the pump serial label.

- Use the voltage for which the power cord is rated.
- Do not strap together control (input/output) cables and power cables.
- When there is a power interruption, the pump, which has an auto-restart feature, will restore the pump to the operating state it was in when the power was lost.
- POWER: 115V60Hz (0.6A max.), 220V50Hz (0.3A max.), 230V60Hz (0.3A max.), 230V50Hz (0.3A max.), 240V50Hz (0.3A max.)

NOTE: Contact a licensed electrician when there is doubt regarding the electrical installation.

7.0 TOUCHPAD LAYOUT

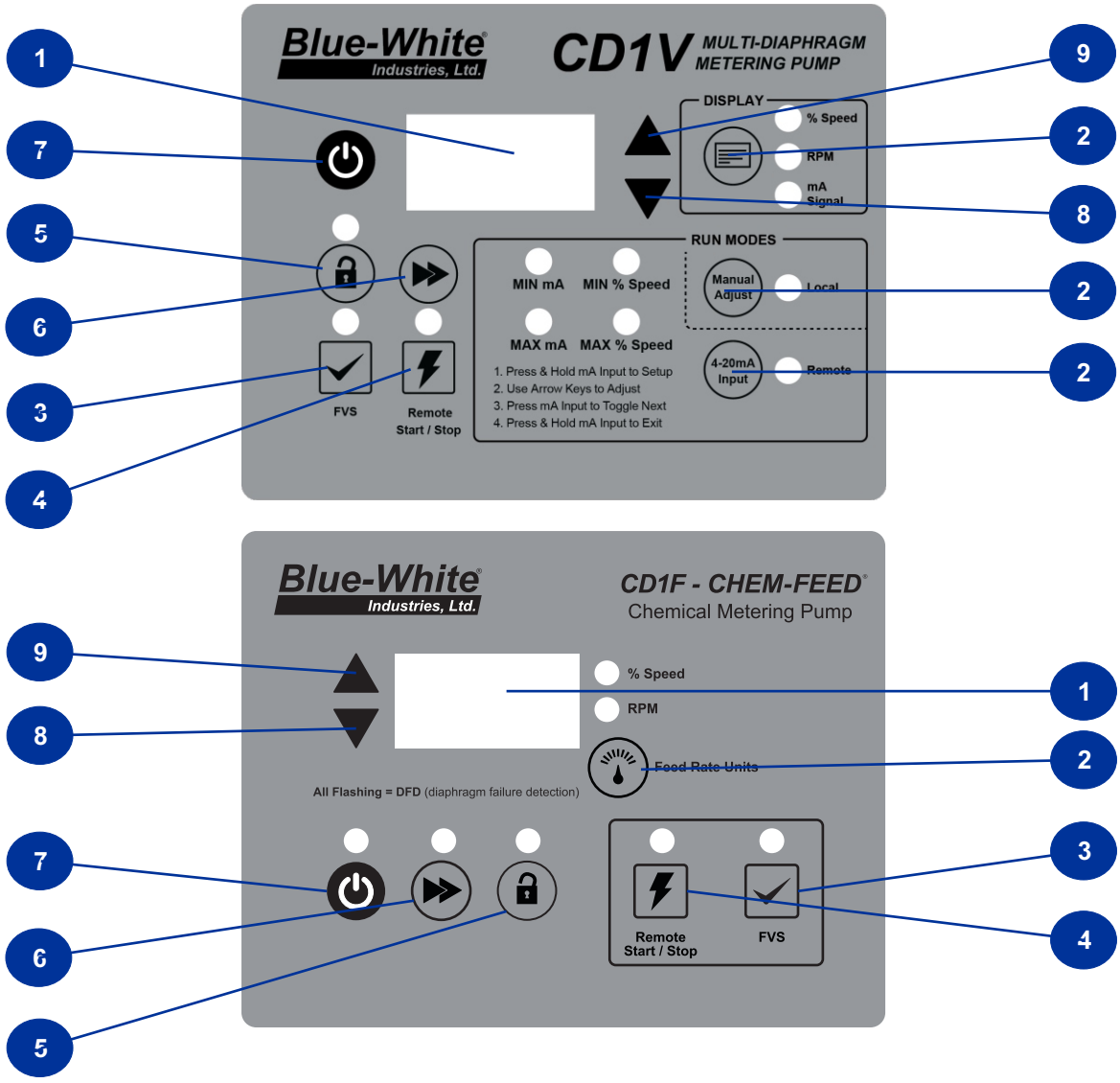

Item Number	Item
1	LED/LCD Readout
2	Rate Display Key
3	Flow Verification Sensor (FVS) Key
4	Remote Start/Stop Key
5	Lock-Out Key
6	Prime Key
7	Start & Stop Key
8	Down Key
9	Up Key
10	Manual Speed Adjust
11	4-20mA

7.1 IO Connection

WARNING

Risk of electric shock - All wiring must be insulated and rated 300V minimum.

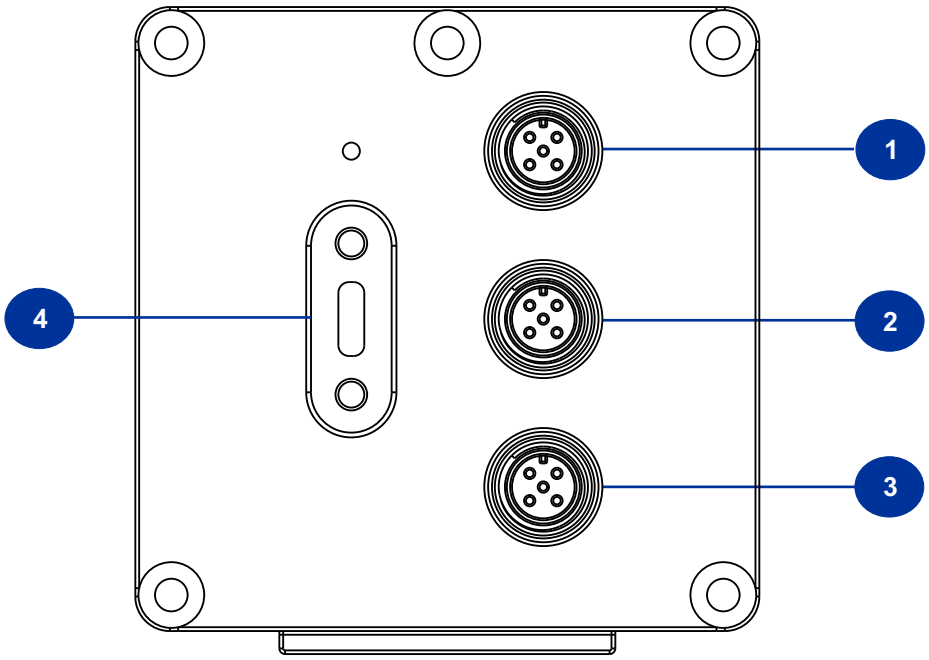

Pump (Right Side Panel)

Item Number	Item
1	M12 Input Connector 1
2	M12 Input Connector 2 (Included with CD1V ONLY)
3	M12 Output Connector
4	USB-C Connector

M12 connectors not included with product.

Blue-White Industries recommends any A-Type M12 connector with 5 position female sockets

M12 Input Connector

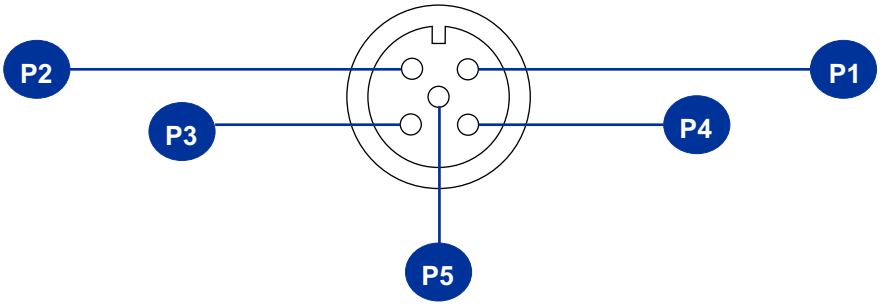

M12 Input Connector 1

PIN	Function	Specifications	Reference
P1	4-20mA Input (+)	120 Ohm Impedance, Non powered loop	(+) Positive
P2	4-20mA Input (-)	120 Ohm Impedance, Non powered loop	(-) Negative
P3		Not Used	
P4		Not Used	
P5		Not Used	

M12 Input Connector 2 - Included with CD1V ONLY

PIN	Function	Specifications	Reference
P1	Remote Start / Stop	N.O. Dry Contact Closure	Open = Stop Gnd = Run
P2	Ground	DC Ground	0 VDC
P3	FVS (+)	15 VDC @ 60 mA	To power FVS sensor
P4	FVS (-)	DC Ground (0 VDC)	FVS Ground Input
P5	FVS (Signal)	Input Signal	Input for FVS Signal

M12 Output Connector

PIN	Function	Specifications
P1	Motor On Out (+)	SS(+) Contact Out Solid State
P2	Motor On Out (-)	SS(-) Contact Out Solid State
P3	N.O.	Relay Out, N.O. Contact 3 Amp @ 250 VAC
P4	COM	Relay Out, COM Contact
P5	N.C.	Relay Out, N.C. Contact

8.0 OUTPUT ADJUSTMENT

The speed of the pumping mechanism is adjustable from 0.05 to 100 % motor speed (0.05 RPM to 100 RPM).

9.0 DFD (Diaphragm Failure Detection)

This system is capable of detecting presence of a large number of chemicals including Sodium Hypochlorite (Chlorine), Hydrochloric (muriatic) Acid, Sodium Hydroxide, and many others. System will not be triggered by water (rain, condensation, etc.) or lubricants.

If system has detected chemical, pump diaphragm must be replaced and pump head must be thoroughly cleaned. Failure to clean pump head will void warranty.

If DFD alarm occurs, pump will stop, close an alarm output, and screen will flash DFD with an alarm icon.

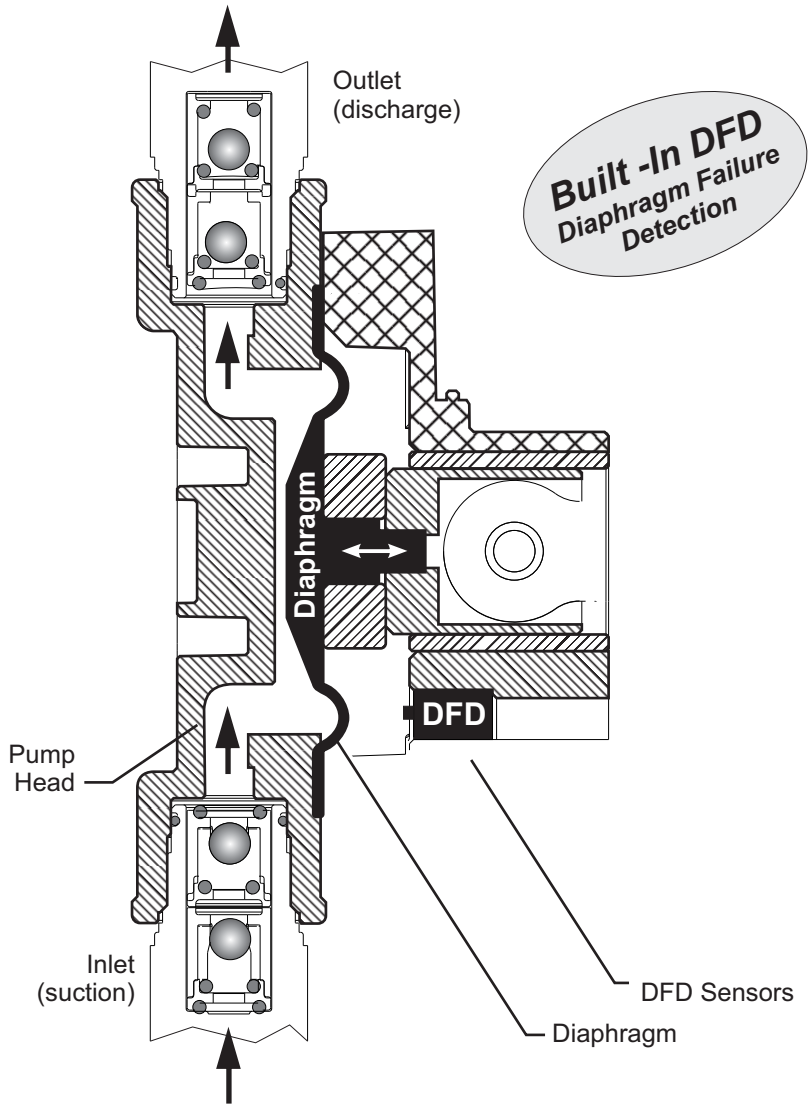

10.0 Pump Maintenance

CAUTION ⚠	Prior to service, pump clean water through pump and suction / discharge line to remove chemical.

CAUTION ⚠	Always wear protective clothing, face shield, safety glasses and gloves when working on or near your metering pump. Additional precautions should be taken depending on solution being pumped. Refer to MSDS precautions from your solution supplier.

10.1 Routine Inspection and Maintenance

Pump requires very little maintenance. However, pump and all accessories should be checked weekly. This is especially important when pumping chemicals. Inspect all components for signs of leaking, swelling, cracking, discoloration or corrosion. Replace worn or damaged components immediately.

Cracking, crazing, discoloration during first week of operation are signs of severe chemical attack. If this occurs, immediately remove chemical from pump. Determine which parts are being attacked and replace them with parts that have been manufactured using more suitable materials. Manufacturer does not assume responsibility for damage to pump that has been caused by chemical attack.

10.2 Cleaning Pump

Pump will require occasional cleaning, especially Injection fitting, Footvalve / Strainer, and pump head valves. Frequency will depend on type and severity of service.

] Inspect and replace pump head valves as required.

] Periodically clean injection / check valve assembly, especially when injecting fluids that calcify such as sodium hypochlorite. These lime deposits and other build ups can clog fitting, increase back pressure and interfere with check valve operation.

] Periodically clean suction strainer.

] Periodically inspect pump housing (enclosure) for chemical attack. Protect pump housing from continuous exposure to chemicals, such as drips or fumes from surrounding equipment and plumbing.

10.3 Replacing the Pump Diaphragm

] When changing the diaphragm, the pump head chamber and pump head cover should be wiped free of any dirt and debris. The pump stroke must be FORWARD when installing the diaphragm, and BACK when installing and tightening the pump head.

] When replacing the pump diaphragm, note the order of parts per the illustration below:

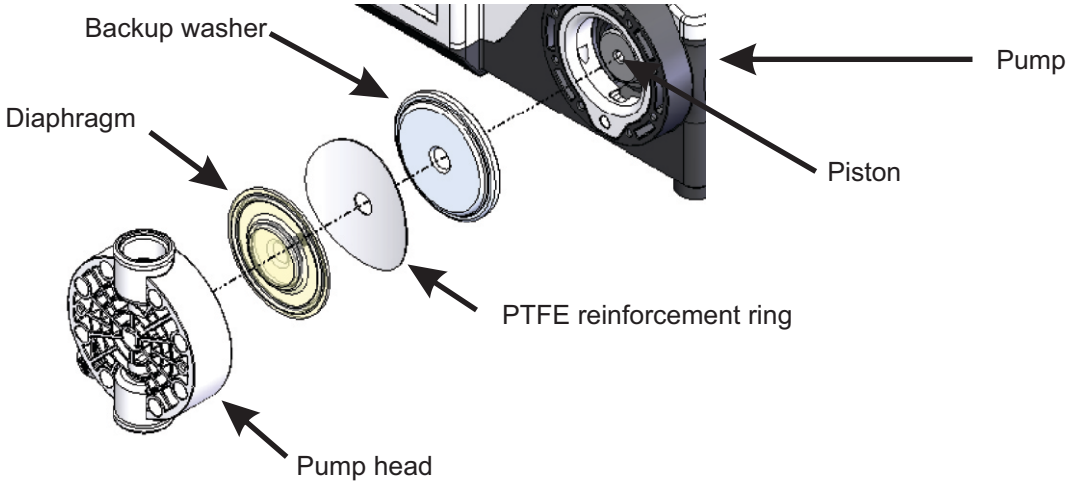

11.0 ACCESSORIES

The following accessories are available for the CD1 Multi-Diaphragm Metering Pump. Please visit Bluewhite.com for more information.



KIT-M12
TWO M12 CABLES

KIT-M12

Kit contains: Two M12 cables.

KIT-M12 WIRING INSTRUCTIONS		
DIAGRAM	PIN #	WIRE COLOR
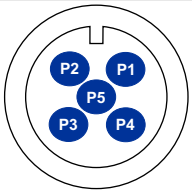	PIN 1	BROWN
	PIN 2	WHITE
	PIN 3	BLUE
	PIN 4	BLACK
	PIN 5	GRAY

NOTE: THIS DIAGRAM IS FOR THE PUMP'S M-12 PORT



CABLE-UAC
USB A-C CABLE

CABLE-UAC

Kit contains: One 3' USB-A to USB-C cable.



KIT-C5B
CD 1/2" HOSE BARB

KIT-C5B

Kit contains: Two union nuts, Two 1/2" hose barb adapters, Two #5 hose clamps, One 2 1/2' clear reinforced PVC tube and One 5' 5/8" suction tube



KIT-CQE
QUICK CONNECT CD1 EP

KIT-CQE

Kit contains: One discharge fitting (red) and One suction fitting (white). Both fittings come with EP o-rings installed



KIT-CQA
QUICK CONNECT CD1 AFLAS

KIT-CQA

Kit contains:Kit contains: One discharge fitting (red) and One suction fitting (white). Both fittings come with AFLAS o-rings installed

NOTE: All Accessories are sold separately



KIT-S07
STAR III 7 GALLON TANK

KIT-S7

Kit contains: One 7 gallon tank, One 3/8” suction tube, One 3/8” discharge tube, One foot valve and strainer and One mounting bracket with screws



KIT-S15
STAR III 15 GALLON TANK

KIT-S15

Kit contains: One 15 gallon tank, One 3/8” suction tube, One 3/8” discharge tube, One foot valve and strainer and One mounting bracket with screws



KIT-S30
STAR III 30 GALLON TANK

KIT-S30

Kit contains: One 30 gallon tank, One 3/8” suction tube, One 3/8” discharge tube, One foot valve and strainer and One mounting bracket with screws



KIT-MB
FLOOR MOUNTING BRACKETS

KIT-MB

Kit contains: Two floor mounting brackets and Two screws

12.0 REPLACEMENT PARTS LIST

ITEM NO.	PART NUMBER	DESCRIPTION	QTY.
1	90011-246	SCREW 1/4-20 X 1.50 SOC CAP SS	4
2	76001-945	HYPER-DRIVE MACHINED	1
3	90006-600	BACK-UP WASHER HD .100" THICK	2
4	71010-730	MANIFOLD NUT UNION AND FLANGE SPIN WELD	2
5	90002-707	ADAPTER CART	4
6	70004-539	P/HEAD COVER CHEM-FEED	2
7	90002-708	.37T ADAPTER	2
8	90002-712	NUT UNION MD-3 MOLDED PVDF	2
9	70000-131	CAM C-1500 S/A .125" COMPLETE	1
10	90011-261	SCREW 5/16-18 X .50"L PHIL NYLON BLK	1
11	76002-034	CAP DFD	1
12	76001-966	STANDOFF HEX MALE-FEMALE THREADED MACH.	2
13	71010-745	COVER PUMPHEAD MOUNT ASSY	1
14	71000-392	CART BULLET DOUBLE AFLAS PVDF	4
	71000-207	CART BULLET DOUBLE EP PVDF	
15	90003-003	O-RING 010 EP	1
	90003-004	O-RING 010 VITON	
16	90003-581	O-RING 2-112 AFLAS	6
	90003-595	O-RING 2-112 EP	
17	90003-125	O-RING 015 VITON	4
	90003-015	O-RING 015 EP	
18	KIT-CDV	DIAPHRAGM PVDF	2
	KIT-CDE	DIAPHRAGM FLEX-A-PRENE	
19	70004-096	PUMP/HD HDN LG PVDF V STAMP	2
	70004-097	PUMP/HD HDN LG PVDF E STAMP	

12.1 EXPLODED VIEW

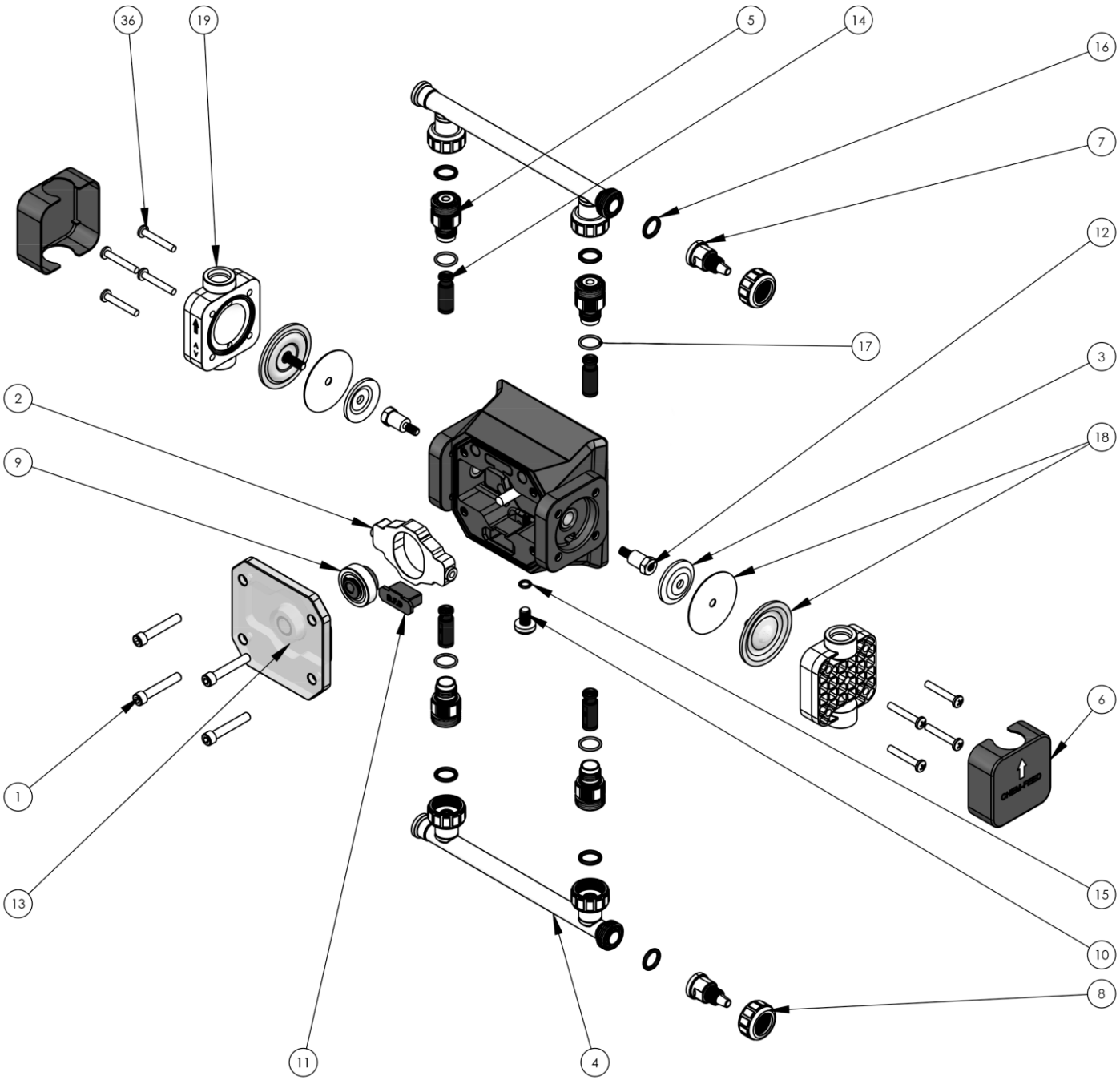

13.0 TROUBLESHOOTING

Error Code	Explanation	Troubleshooting
E01	Motor Over Current	Ensure that diaphragm is installed properly
E02	Over Voltage	Check power supply output voltage
E03	Under Voltage	Check power supply output voltage
E04	Temperature exceeds 75°C at control	Check ambient conditions, restart pump once cooled to ambient temperature
E05	Inverter Error	Contact Blue-White Industries (714) 893-8529 techsupport@blue-white.com
E06	No Motor Connection	Contact Blue-White Industries (714) 893-8529 techsupport@blue-white.com
E08	Motor Stall	Ensure that diaphragm is installed properly
E10	Capacitor bank charging error	Contact Blue-White Industries (714) 893-8529 techsupport@blue-white.com
E17	Communication error at display	Contact Blue-White Industries (714) 893-8529 techsupport@blue-white.com

14.0 WARRANTY

14.1 Limited Warranty

Your Blue-White product is a quality product and is warranted for a specific time from date of purchase (proof of purchase is required). The product will be repaired or replaced at our discretion. Failure must have occurred due to defect in material or workmanship and not as a result of operation of the product other than in normal operation as defined in the product manual. Warranty status is determined by the product's serial label and the sales invoice or receipt. The serial label must be on the product and legible. The warranty status of the product will be verified by Blue-White or a factory authorized service center.

CHEM-FEED® CD1 pumps are warranted for 2 years from date of purchase (proof of purchase is required). Pumps will be repaired or replaced at our discretion.

14.2 DIAFLEX® Warranty

DIAFLEX® diaphragms are warranted for the life of the pump. Blue-White will replace a damaged diaphragm at no cost to the customer provided the pump was at all times operated within the guidelines included in the pump's operation manual. This warranty only applies to DIAFLEX® diaphragms, not the pumps themselves. Blue-White pumps are separately covered by warranties specific to them.

14.3 What is not Covered

- **Flex-A-Prene diaphragm and rubber components - They are perishable and require periodic replacement**
- **Pump removal, or re-installation, and any related labor charge.**
- **Freight to the factory, or service center**
- **Pumps that have been tampered with, or in pieces.**
- **Damage to the pump that results from misuse, carelessness (such as chemical spills on the enclosure), abuse, lack of maintenance, or alteration that is out of Blue-White control.**
- **Pumps damaged by faulty wiring, power surges, or acts of nature.**

Blue-White does not assume responsibility for any loss, damage, or expense directly or indirectly related to or arising out of the use of its products. Failure must have occurred due to defect in material or workmanship and not as a result of operation of the product other than in normal operation as defined in the pump operation manual.

The warranty status is determined by the pump's serial label and the sales invoice or receipt. The serial label must be on the pump and be legible. The warranty status of the pump will be verified by Blue-White or a factory authorized service center.

14.4 Procedure for In-Warranty Repair

Warranty service must be performed by the factory or an authorized service center. Contact the factory or local repair center to obtain a RMA (Return Material Authorization) number. It is recommended to include foot strainer and injection/check valve fitting since these devices may be clogged and part of the problem. Decontaminate, dry, and carefully pack the product to be repaired. Please enclose a brief description of the problem and proof of purchase. Prepay all shipping and insurance cost. COD shipments will not be accepted. Damage caused by improper packaging is the responsibility of the sender. When In-Warranty repair is completed, the factory pays for return shipping to the dealer or customer.

14.5 Product Use Warning

Blue-White products are manufactured to meet the highest quality standards in the industry. Each product instruction manual includes a description of the associated product warranty and provides the user with important safety information. Purchasers, installers, and operators of Blue-White products should take the time to inform themselves about the safe operation of these products. In addition, Customers are expected to do their own due diligence regarding which products and materials are best suited for their intended applications. Blue-White is pleased to assist in this effort but does not guarantee the suitability of any particular product for any specific application as Blue-White does not have the same degree of familiarity with the application that the customer/end user has. While Blue-White will honor all of its product warranties according to their terms and conditions, Blue-White shall only be obligated to repair or replace its defective parts or products in accordance with the associated product warranties. **BLUE-WHITE SHALL NOT BE LIABLE EITHER IN TORT OR IN CONTRACT FOR ANY LOSS OR DAMAGE WHETHER DIRECT, INDIRECT, INCIDENTAL, OR CONSEQUENTIAL, ARISING OUT OF OR RELATED TO THE FAILURE OF ANY OF ITS PARTS OR PRODUCTS OR OF THEIR NONSUITABILITY FOR A GIVEN PURPOSE OR APPLICATION.**

14.6 Chemical Resistance Warning

Blue-White offers a wide variety of wetted parts. Purchasers, installers, and operators of Blue-White products must be well informed and aware of the precautions to be taken when injecting or measuring various chemicals, especially those considered to be irritants, contaminants or hazardous. Customers are expected to do their own due diligence regarding which products and materials are best suited for their applications, particularly as it may relate to the potential effects of certain chemicals on Blue-White products and the potential for adverse chemical interactions.

Blue-White tests its products with water only. The chemical resistance information included in this instruction manual was supplied to Blue-White by reputable sources, but Blue-White is not able to vouch for the accuracy or completeness thereof. While Blue-White will honor all of its product warranties according to their terms and conditions, Blue-White shall only be obligated to repair or replace its defective parts or products in accordance with the associated product warranties.

BLUE-WHITE SHALL NOT BE LIABLE EITHER IN TORT OR IN CONTRACT FOR ANY LOSS OR DAMAGE, WHETHER DIRECT, INDIRECT, INCIDENTAL, OR CONSEQUENTIAL, ARISING OUT OF OR RELATED TO THE USE OF CHEMICALS IN CONNECTION WITH ANY BLUE-WHITE PRODUCTS.

ACRONYMS

°C	Celsius
°F	Fahrenheit
AC	Alternating current
bar	Unit of pressure
CIP	Clean-in-place
cm	Centimeters
COD	Cash on Delivery
D	Depth
DC	Direct current
EEE	Electrical and electronic equipment
EP	Ethylene propylene
ETL	Electrical Testing Labs/Intertek
EU	European Union
FDA	Food and Drug Administration
FKM	Fluoroelastomer
FVS	Flow Verification Sensor
GF	Glass fiber
GPD	Gallons per day
GPH	Gallons per hour
H	Height
Hz	Hertz
ID	Inside diameter
IO	Input/Output
Kg	Kilogram
lb.	Pound
LLDPE	Linear low-density polyethylene
LPH	Liters per hour
mA	Milliampere
min	Minute
mL	Milliliters
MSDS	Material Safety Data Sheet
N.C.	Normally Close
N.O.	Normally Open
NPT	National Pipe Thread
NSF	National Sanitation Foundation
OD	Outside diameter
P.N.	Part Number
PBT	Polybutylene Terephthalate
PE	Polyethylene
PSI	Pounds per Square Inch
PVC	Polyvinyl chloride
PVDF	Polyvinylidene fluoride
RCD	Residual-current device
Rev.	Revision
RMA	Return Material Authorization
RPM	Revolutions per minute
SIP	Steam-in-place
SS	Solid state
TFD	Tube Failure Detection
TFE/P	Tetrafluoroethylene propylene
UL	Underwriters Laboratories
US	United States
V	Volt
W	Watt
W	Width
WEEE	Waste Electrical and Electronic Equipment

CHEM-FEED® Model Number

CD1	CHEM-FEED® Multi-Diaphragm Dosing Pump

Series

F	Standard Control Methods (Manual, Remote, FVS)
V	4-20mA Input, In Addition to Standard Control Methods (Manual, Remote, FVS)

Diaphragm and O-Rings Material

V	DiaFlex® Diaphragms and TFE/P O-Rings (For All Chemicals Excluding Caustic Soda and Aqueous Ammonia)
E	Flex-A-Prene® Diaphragms and EP O-Rings (For Caustic Soda and Aqueous Ammonia)

Power Cord (Operating voltage requirement 96VAC to 264VAC)

4	115V 50/60Hz, power cord NEMA 5/15 plug (US)
5	230V 50/60Hz, power cord NEMA 6/15 plug (US)
6	220V 50/60Hz, power cord CEE 7/V11 plug (EU)
8	240V 50/60Hz, power cord AS 3112 plug (Australia/New Zealand)
9	230V 50/60Hz, power cord BS 1363/A plug (UK)

CD1	**F**	**V**	**1**	**4**	**Sample Model Number**

Accessories



KIT-S07
STAR III 7 GALLON TANK



KIT-S15
STAR III 15 GALLON TANK



KIT-S30
STAR III 30 GALLON TANK



KIT-C5B
CD 1/2” HOSE BARB



KIT-MB
FLOOR MOUNTING BRACKETS

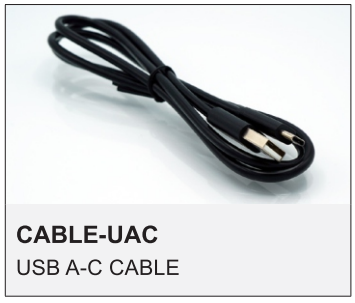

CABLE-UAC
USB A-C CABLE



KIT-M12
TWO M12 CABLES

*KIT-123 FOR 3 M12 CABLES



KIT-CQA
QUICK CONNECT CD1 AFLAS

*KIT-CQE EP O-RINGS

NOTE: Accessories sold separately.



Users of electrical and electronic equipment (EEE) with the WEEE marking per Annex IV of the WEEE Directive must not dispose of end of life EEE as unsorted municipal waste, but use the collection framework available to them for the return, recycle, recovery of WEEE and minimize any potential effects of EEE on the environment and human health due to the presence of hazardous substances. The WEEE marking applies only to countries within the European Union (EU) and Norway. Appliances are labeled in accordance with European Directive 2002/96/EC.

Contact your local waste recovery agency for a *Designated Collection Facility* in your area.

Blue-White
Industries, Ltd.

5300 Business Drive, Huntington Beach, CA 92649, USA
Phone: 714-893-8529 **FAX:** 714-894-9492
E mail: sales@blue-white.com **or** techsupport@blue-white.com **URL:** www.Blue-White.com

P.N. 80000-610 Rev 11 20220622