Arcoptix SA
CH-2000 Neuchâtel
Switzerland
Phone : +41 32 731 04 66
Email: info@arcoptix.com

ARCOPTIX OEM010



The ARCoptix OEM010 is our most compact FT-IR complete system. It features a built-in SiC globar heated to 1550 °K and regulated in temperature to ensure stable illumination. The light that is being output by the instrument is first modulated by our permanently aligned interferometer, making it robust against stray light that might eventually reach the detector. The OEM010 rugged casing also holds a highly sensitive TE-MCT detector which maximizes the response of the system.

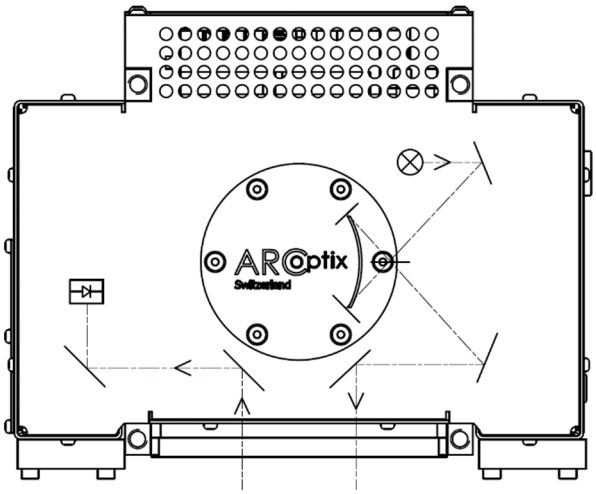

Optical routing in the ARCOPTIX OEM010

Features

- **Internal light source**
- **Compact, rugged unit**
- **Custom I/O coupling modules on request**
- **Robust to ambient light perturbation**
- **Dynamically adjustable resolution:**
  - **8cm^{-1}**
  - **4cm^{-1}**
  - **2cm^{-1}**
  - **0.5 cm^{-1} (on request)**
- **Wear free moving parts for extended lifetime**
- **No purging of the interferometer required**
- **Temperature controlled reference laser**

© Arcoptix SA 2023

Arcoptix SA
CH-2000 Neuchâtel
Switzerland
Phone : +41 32 731 04 66
Email: info@arcoptix.com

Specifications

Product code	FTIR-OEM010-060-4TE	FTIR-OEM010-085-4TE	FTIR-OEM010-120-4TE
Beam-splitter material	CaF_2		ZnSe
Spectral Range [cm^{-1}]	1’660-5’000	1’200-6’600	830-5’000
Spectral Range [µm]	2-6	1.5-8.5	2-12
Detector Type	MCT (2-TE cooled)	MCT (4-TE cooled)	
Detector Peak D* [cm $Hz^{1/2}W^{-1}$]	>1x10^{11}	>8x10^{9}	>4x10^{9}
Signal-to-noise ratio (SNR)	> 80'000:1[i]	>40’000:1[i]	
Output beam characteristics	Ø 12.7mm collimated (max ~30mrad half angle)		
Interferometer type	Permanently aligned, double retro-reflector design		
Resolution (unapodized) [cm^{-1}]	*0.5*[ii], 2, 4, 8 (user selectable)		
Wavenumber repeatability	<10 PPM		
Scan frequency	>4 hz @ 4cm^{-1}		
Internal reference laser	Temperature-stabilized solid-state laser @850nm		
A/D Converter	24 bit		
Amplifier	4 gain levels low noise trans-impedance amplifier		
Operating temperature [°C]	10 to 40		
Storage temperature [°C]	-20 to 60		
Power requirement	12V / 40W		
Communication Interface	USB 2.0		
Software Interface	Windows 7/10/11, Linux API for controlling the instrument via our DLL Single board computer available on request		
Dimensions [mm]	165x145x82		
Weight [g]	2100		

[i] Input to output direct light routing, 60s measurement, around peak sensitivity wavelength, 4cm-1, Norton-Beer weak apodization.
[ii] Available on request only, please contact us at info@arcoptix.com for details
SPECIFICATIONS ARE SUBJECT TO CHANGES WITHOUT NOTICE.

© Arcoptix SA 2023